Digitized Automation for a Changing World

Delta Motor-mounted Pump Drive MPD / MP300 Series User Manual

www.deltaww.com

Copyright Notice
©Delta Electronics, Inc. All rights reserved.
All information contained in this user manual is the exclusive property of Delta Electronics Inc. (hereinafter referred to as "Delta ") and is protected by copyright law and all other laws. Delta retains the exclusive rights of this user manual in accordance with the copyright law and all other laws. No parts in this manual may be reproduced, transmitted, transcribed, translated or used in any other ways without the prior consent of Delta.

Limitation of Liability

The contents of this user manual are only for the use of the products manufactured by Delta. Except as defined in special mandatory laws, Delta provides this user manual “as is” and does not offer any kind of warranty through this user manual for using the product, either express or implied, including but not limited to the following: (i) this product will meet your needs or expectations; (ii) the information contained in the product is current and correct; (iii) the product does not infringe any rights of any other person. You shall bear your own risk to use this product.

In no event shall Delta, its subsidiaries, affiliates, managers, employees, agents, partners and licensors be liable for any direct, indirect, incidental, special, derivative or consequential damages (including but not limited to the damages for loss of profits, goodwill, use or other intangible losses) unless the laws contains special mandatory provisions to the contrary.

Delta reserves the right to make changes to the user manual and the products described in the user manual without prior notice and afterwards.

(Original instructions)

Before Use

READ PRIOR TO INSTALLATION FOR SAFETY.

DANGER

- ☑ Disconnect AC input power before connecting any wiring to the AC motor drive.
- ☑ Turn OFF the AC motor drive power before doing any wiring. A charge with hazardous voltages may remain in the DC bus capacitors even after the power has been turned off for a short time. Do not touch the internal circuits and components before the POWER LED (behind the digital keypad) is OFF.
- ☑ For your safety, measure the remaining voltage with a DC voltmeter and do not start wiring before the voltage drops to a safe level (less than 25 V_{DC}). Installing wiring with a residual voltage may cause personal injury, sparks and short circuit.
- ☑ There are highly sensitive MOS components on the printed circuit boards. These components are especially sensitive to static electricity. Please do not touch these components or the circuit boards before taking anti-static measures.
- ☑ Never reassemble internal components or wiring.
- ☑ Ground the AC motor drive using the ground terminal. The grounding method must comply with the laws of the country where the AC motor drive is to be installed.
- ☑ Do NOT install the AC motor drive in a place subjected to high temperature, direct sunlight and inflammables.

CAUTION

- ☑ Never connect the AC motor drive output terminals U/T1, V/T2 and W/T3 directly to the AC mains circuit power supply.
- ☑ After finishing the wiring of the AC motor drive, check if R/L1, S/L2 and T/L3 are short-circuited to ground with a multimeter. Do NOT power the drive if short circuits occur. Eliminate the short circuits before the drive is powered.
- ☑ Rated voltage of power system to install motor drives is as below, make sure that the installation voltage is within the ranges mentioned below while installing the motor drives:

  For 460V models, the range is between 323–528V.
- ☑ Refer to the table below for short circuit rating:

Model (Power)	Short circuit rating
460V	5 kA

- ☑ Only qualified persons are allowed to install, wire and maintain the AC motor drives.
- ☑ Even if the three-phase AC motor is stopped, a charge may still remain in the main circuit terminals of the AC motor drive with hazardous voltages.
- ☑ The performance of electrolytic capacitor will degrade if it is not charged for a long time. It is recommended to charge the drive which is stored in no charge condition every 2 years for 3–4 hours to restore the performance of electrolytic capacitor in the motor drive.

  NOTE: When power up the motor drive, use adjustable AC power source (ex. AC auto-transformer) to charge the drive at 70–80% of rated voltage for 30 minutes (do not run the motor drive). Then charge the drive at 100% of rated voltage for an hour (do not run the motor drive). By doing these, restore the performance of electrolytic

	capacitor before starting to run the motor drive. Do NOT run the motor drive at 100% rated voltage right away. ☑ Pay attention to the following precautions when transporting and installing this package (including wooden crate and wood stave). 1. If you need to deworm the wooden crate, do not use fumigation or you will damage the drive. Any damage to the drive caused by using fumigation voids the warranty. 2. Use other methods, such as heat treatment or any other non-fumigation treatment, to deworm the wood packaging material. 3. If you use heat treatment to deworm, leave the packaging materials in an environment of over 56°C for a minimum of thirty minutes. ☑ Connect the drive to a three-phase three-wire or three-phase four-wire Wye system to comply with UL standards. ☑ If the motor drive produces a leakage current of over 3.5mA AC or over 10mA DC on the Protective Earthing conductor, the minimum specifications required of the Protective Earthing conductor to be installed have to comply with the national, local laws and regulations or follow IEC 61800-5-1 to do grounding. ☑ The MPD series drives are designed for Industrial application. The non-linear load generates harmonic current, when you use a MPD series drive in a public low-voltage distribution network (such as power supply in a residential building), install suppression devices (for example, one-to-one transformer or input AC reactor) to suppress the possible interferences caused by the harmonic current. Contact Delta for more information.

NOTE:

1. In the figures in this manual, the cover or safety shield is disassembled only when explaining the details of the product. During operation, install the top cover and wiring correctly according to the provisions. Refer to the operation descriptions in the manual to ensure safety.
2. The figures in this instruction are only for reference and may be slightly different depending on your model, but it will not affect your customer rights.
3. The content of this manual may be revised without prior notice. Consult our distributors or download the latest version at http://www.deltaww.com/iadownload_acmotordrive

Table of Contents

Chapter 1 Introduction **9**
1-1 Nameplate Information 10
1-2 Model Name 11
1-3 Serial Number 13
1-4 Instructions for Service Code 15
1-5 RFI Jumper 16
Chapter 2 Dimensions **19**
2-1 The Size of the AC Motor Drive 20
2-2 The Size of the MPD 21
2-3 The Size of the Motor Axle 23
2-4 The Weight of the MPD 24
Chapter 3 Installation **25**
3-1 Mounting Clearance 26
3-2 Airflow and Power Dispassion 29
Chapter 4 Wiring **31**
4-1 System Wiring Diagram 33
4-2 Wiring 34
4-3 The Assembly of Motor and AC Motor Drive 35
4-4 The Wiring of Multi-pump Controlled Communication Cable 38
4-5 The Wiring of Pressure Sensor 38
Chapter 5 Main Circuit Terminals **41**
5-1 Main Circuit Diagram 44
5-2 Main Circuit Terminal Specifications 45
Chapter 6 Control Terminals **49**
6-1 Control Terminals 51
Chapter 7 Optional Accessories **57**
7-1 Magnetic Contactor / Air Circuit Breaker and Non-fuse Circuit Breaker 58
7-2 Fuse Specification Chart 60
7-3 AC Reactor 61
7-4 EMC Shield Plate 67
7-5 Waterproof Connector 69
7-6 USB / RS-485 Communication Interface IFD6530 71
7-7 Perpetual Calendar and Battery 76
7-8 The Adapter Plate for Motor 77
7-9 Fan and Fan Cord 84
Chapter 8 Option Cards **87**
8-1 Option Card Installation 88
8-2 CMM-PD02 -- Communication Extension Card, Profibus DP 91
8-3 CMM-DN02 -- Communication Extension Card, DeviceNet 93

8-4 CMM-EIP02 -- Communication Extension Card, EtherNet/IP, Modbus TCP 96
8-5 CMMP-BT01 -- Communication Extension Card, Bluetooth 100
8-6 Delta Standard Fieldbus Cables 102
Chapter 9 Specifications 103
9-1 460V Models 104
9-2 General Specifications 109
9-3 Environment for Operation, Storage and Transportation 110
9-4 Derating for Ambient Temperature, Altitude and Carrier Frequency 111
9-5 Specifications of Motor 113
Chapter 10 Digital Keypad 115
10-1 Appearance of Keypad 116
10-2 The Backlight of the Keypad Panel 116
10-3 Descriptions of Keypad Functions 117
10-4 Information Displayed on the Panel 118
10-5 Keypad Operation Process 120
10-6 Reference Table for the 16-segment Digital Keypad LED Display 124
Chapter 11 Summary of Parameter Settings 125
00 Drive Parameters 126
01 Basic Parameters 132
02 Digital Input / Output Parameters 134
03 Analog Input / Output Parameters 138
04 Multi-Step Speed Parameters 140
05 Motor Parameters 142
06 Protection Parameters (1) 144
07 Special Parameters 149
08 High-function PID Parameters 151
09 Communication Parameters 152
10 Speed Feedback Control Parameters 156
11 Advanced Parameters 157
12 Function Parameters 158
13 Macro / User-defined Macro 162
14 Protection Parameters (2) 163
Chapter 12 Descriptions of Parameter Settings 165
12-1 Descriptions of Parameter Settings 166
00 Drive Parameters 166
01 Basic Parameters 185
02 Digital Input / Output Parameters 195
03 Analog Input / Output Parameters 213
04 Multi-step Speed Parameters 223
05 Motor Parameters 231
06 Protection Parameters (1) 235
07 Special Parameters 257

08 High-function PID Parameters 271
09 Communication Parameters 279
10 Speed Feedback Control Parameters....287
11 Advanced Parameters 293
12 Function Parameters....295
13 Macro / User-defined Macro 313
14 Protection Parameters (2)....315
12-2 Adjustment & Application....319
12-2-1 Water pump system related parameters: 319
12-2-2 Induction Motor VF Control Adjustment Procedure (IMVF Sensorless, Pr.00-11 = 0) 328
12-2-3 Permanent-Magnet Synchronous Motor, Space Vector Control Adjustment Procedure (PM SVC, Pr.00-11 = 2)....331
Chapter 13 Warning Codes 339
Chapter 14 Fault Codes....395
Chapter 15 PLC Function Applications 461
15-1 PLC Summary....462
15-2 Notes before Using PLC 463
15-3 Start-up....465
15-4 Basic Principles of PLC Ladder Diagrams 474
15-5 Functions of Various PLC Devices....486
15-6 Introduction to the Functions of Instructions 498
15-7 Fault Display and Treatment 594
15-8 Explanation of Speed Mode Control with PLC....595
15-9 The Applications for Remote IO Control of Modbus (Use MODRW) 597
15-10 RTC (real-time clock) 604
15-11 Enable The Built-in PLC Function of MPD (Scheduled Function, Multi-master Function)....605
15-12 Function Block Diagram (FBD) --- for DIADesigner 611
Chapter 16 BACnet Instructions 623
16-1 Introduction to BACnet and the Steps 624
Appendix A. Modbus Protocol 629
A-1 Code Description 630
A-2 Data Format 630
A-3 Communication Protocol....631
A-4 Address list 636
A-5 Exception response. 642
Appendix B. Revision History 643

Issued Edition: 00
Firmware Version: V1.05 (Refer to Pr.00-06 on the product for the firmware version.)
Issued Date: 2026/3

[This page intentionally left blank]

Chapter 1 Introduction

1-1 Nameplate Information

1-2 Model Name

1-3 Serial Number

1-4 Instructions for Service Code

1-5 RFI Jumper

After receiving the AC motor drive, check for the following:

1. Inspect the unit after unpacking to ensure that it was not damaged during shipment. Make sure that the part number printed on the package matches the part number indicated on the nameplate.
2. Make sure that the mains voltage is within the range indicated on the nameplate. Install the AC motor drive according to the instructions in this manual.
3. Before applying power, make sure that all devices, including mains power, motor, control board and digital keypad, are connected correctly.
4. When wiring the AC motor drive, make sure that the wiring of input terminals “R/L1, S/L2, T/L3” are correct to prevent damage to the drive.
5. When power is applied, use the digital keypad to set parameters. When executing a trial run, begin with a low speed and then gradually increase the speed to the desired speed.

1-1 Nameplate Information

MPD = MP300 (AC motor drive) + MSI (Motor)

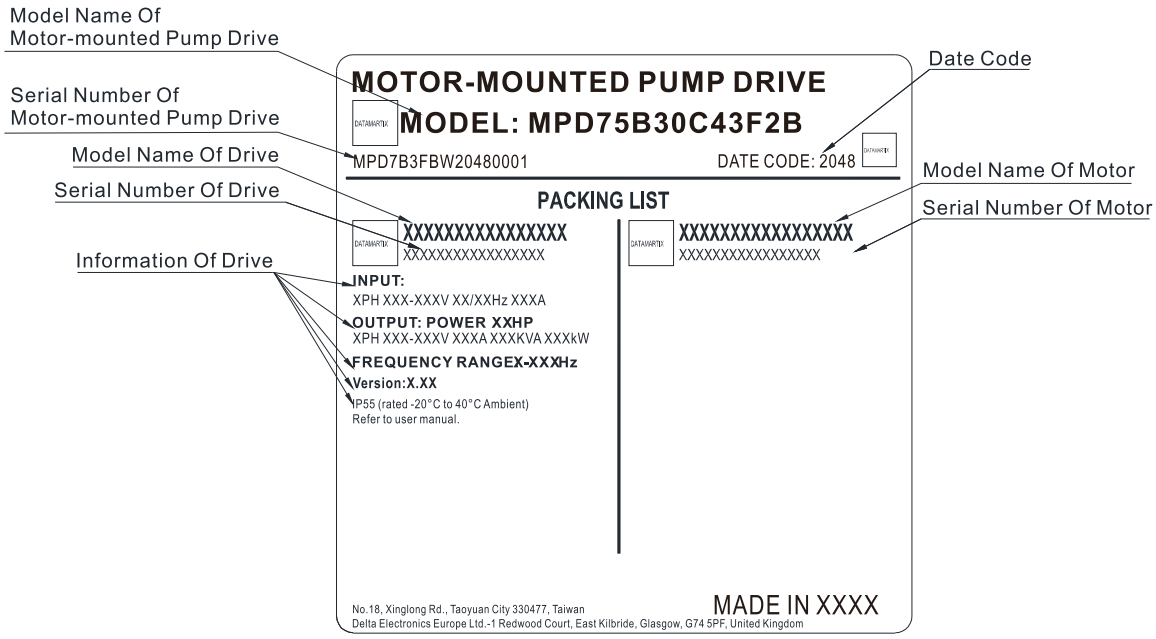

MP300 (AC motor drive)

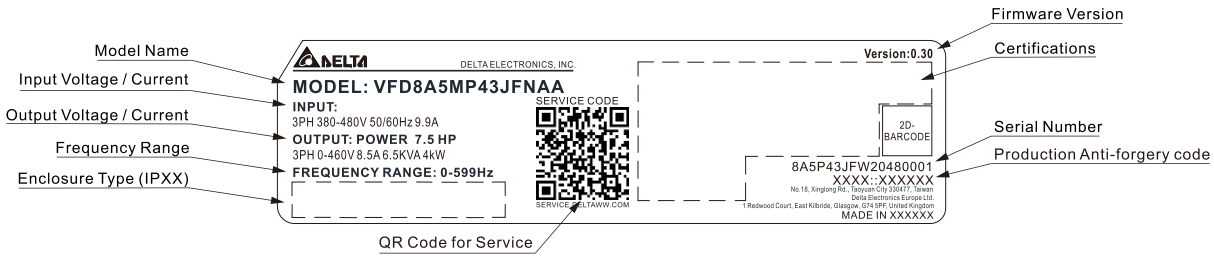

MSI (Motor)

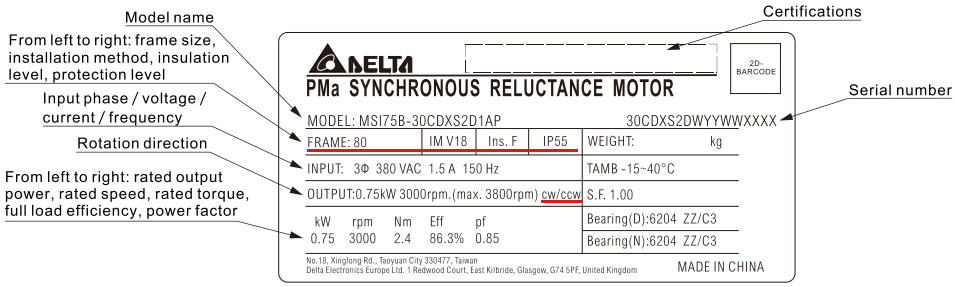

1-2 Model Name

MPD = MP300 (AC motor drive) + MSI (Motor)

	[1]	[2]	[3]	[4]	[5]	[6]	[7]
Example	MPD	75B	30C	43	N	2	B

Definition		Description
[1]	Product name	Motor-mounted Pump Drive
[2]	Rated power	Code * (A = 1, B = 10, C = 100) e.g. 75B = 0.75 kW; 75C = 7.5 kW
[3]	Rated RPM	Code * (A = 1, B = 10, C = 100) e.g. 30C = 3000 rpm
[4]	Input voltage	43 = 460V, three-phase
[5]	EMC filter	N = No filter F = Built-in EMC filter
[6]	Shaft key type	2 = Solid cylindrical shaft with square key
[7]	Mounting arrangement	B = IM B5, IM V1 D = IM B14, IM V18

Table 1-1

MP300 (AC motor drive)

	[1]	[2]	[3]	[4]	[5]	[6]	[7]	[8]	[9]
Example	VFD	8A5	MP	43	J	F	N	A	A

Definition		Description
[1]	Product name	VFD = AC Motor Drive
[2]	Specification of current	Rated output current, under normal duty: 120% 60 seconds **NOTE:** refer to Chapter 9 Specifications for more details
[3]	Series	MP = MP300 (for Motor-mounted Pump Drive)
[4]	Input voltage	43 = 460V, three-phase
[5]	Protection level	J = IP55
[6]	EMC filter	N = No filter F = EMC filter
[7]	Safety function	N = No function
[8]	Model type	A = Standard
[9]	Version type	N/A

Table 1-2

MSI (Motor)

	[1]	[2]	[3]	[4]	[5]	[6]	[7]	[8]	[9]	[10]	[11]
Example	MSI	75B	30C	D	X	S	2	D	1	A	P

Definition		Description
[1]	Product name	Motor type
[2]	Motor power	Code * (A = 1, B = 10, C = 100) e.g.0.75 kW = 75B
[3]	Rated RPM	Code * (A = 1, B = 10, C = 100) e.g. 30C = 3000 rpm
[4]	Rated voltage	D = 380V, three-phase
[5]	Encoder type	X = Without sensor
[6]	Cooling method	S = IC411
[7]	Shaft key type	2 = Solid cylindrical shaft with square key
[8]	Mounting arrangement	B = IM B5, IM V1 D = IM B14, IM V18
[9]	Shieled ball bearing	1 = Oil seal F = Oil seal + fan cover (frame B)
[10]	Material code	A = Aluminum cover
[11]	Application code	P = Motor for using MPD

Table 1-3

1-3 Serial Number

MPD = MP300 (AC motor drive) + MSI (Motor)

	[1]	[2]	[3]	[4]	[5]	[6]	[7]	[8]
Example	MPD	7B3	F	B	W	20	48	0001

Definition		Description
[1]	Model code	Product name
[2]		7B3: 0.75 kW, 3000 rpm
[3]		EMC filter N: No filter F: Built-in EMC filter
[4]		Installation B = IM B5, IM V1 D = IM B14, IM V18
[5]	Production factory	T: Taoyuan W: Wujiang
[6]	Production year	2020
[7]	Production week	48
[8]	Production number	0001

Table 1-4

MP300 (AC motor drive)

	[1]	[2]	[3]	[4]	[5]	[6]	[7]	[8]	[9]
Example	8A5	P	43	J	N	W	20	48	0001

Definition		Description
[1]	Model code	Rated output current, under normal duty: 120% 60 seconds **NOTE:** Refer to Chapter 9 Specifications for more details
[2]		MP300 series
[3]		43 = 460V, three-phase
[4]		Protection level, J = IP55
[5]		EMC filter N: No function F: Built-in EMC filter
[6]	Production factory	T: Taoyuan W: Wujiang
[7]	Production year	2020
[8]	Production week	48
[9]	Production number	0001

Table 1-5

MSI (Motor)

	[1]	[2]	[3]	[4]	[5]
Example	30CDXS2D	W	20	48	0001

Definition		Description
[1]	Model code	Product name
[2]	Ship from	W: Wujiang
[3]	Production year	2020
[4]	Production week	48
[5]	Production number	0001

Table 1-6

1-4 Instructions for Service Code

Location of Service Code

Located on the product label, see the red box in the picture below.

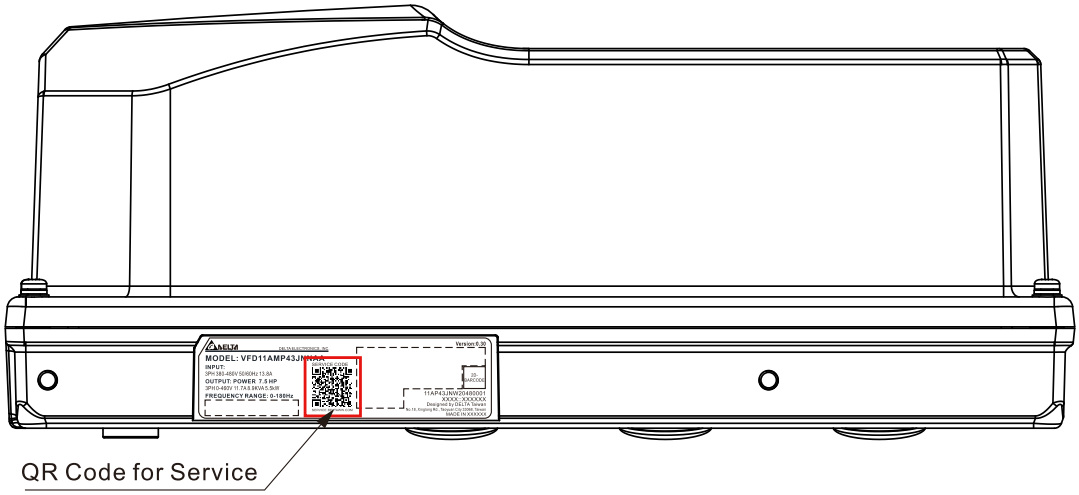

How to use Service Code

SERVICE CODE

SERVICE.DELTAWW.COM

QR code

https://service.deltaww.com/ia/repair?sn=product-serial-number

Web address of product service

https://service.deltaww.com

Scan QR Code to request service

1. Find the QR code (as shown above).
2. Use a smartphone to run a QR Code reader APP.
3. Point your camera at the QR Code. Hold your camera steady until the QR code comes into focus.
4. Access the Delta After-Sales Service website.
5. Fill your information into the column marked with an orange star.
6. Enter the CAPTCHA and click “Submit” to complete the application.

Cannot find the QR Code

1. Open a web browser on your computer or smartphone.
2. In the browser address bar, enter https://service.deltaww.com/us/Repair/Request?type=IA and press **Enter**.
3. Fill your information into the column marked with an orange star.
4. Enter the CAPTCHA and click “Submit” to complete the application.

1-5 RFI Jumper

RFI Jumper:

☑ The drive contains Varistors / MOVs that are connected from phase to phase and from phase to ground to prevent the drive from unexpected stop or damage caused by mains surges or voltage spikes. Because the Varistors / MOVs from phase to ground are connected to ground with the RFI jumper, removing the RFI jumper disables the protection.

☑ In models with a built-in EMC filter, the RFI jumper connects the filer capacitors to ground to form a return path for high frequency noise in order to isolate the noise from contaminating the mains power. Removing the RFI jumper strongly reduces the effect of the built-in EMC filter. Although a single drive complies with the international standards for leakage current, an installation with several drives with built-in EMC filters can trigger the RCD. Removing the RFI jumper helps, but the EMC performance of each drive is no longer guaranteed.

Screw Torque: 6–8 kgf-cm / [5.2–6.9 lb-in.] / [0.59–0.78 Nm]

As shown in the picture below, the screw works as a RFI jumper, loosen or tighten the screw to disconnect or connect the RFI jumper according to your need.

Frame A / B

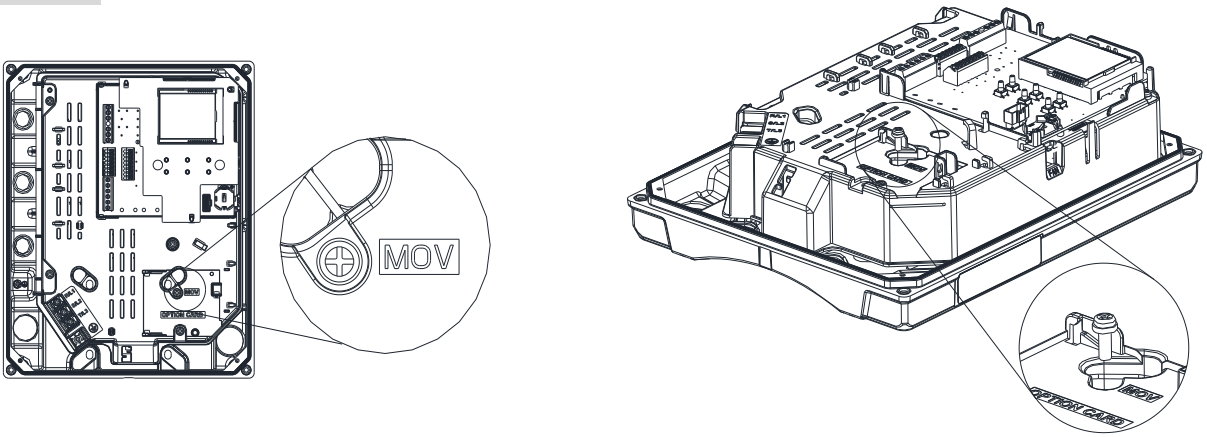

Frame C

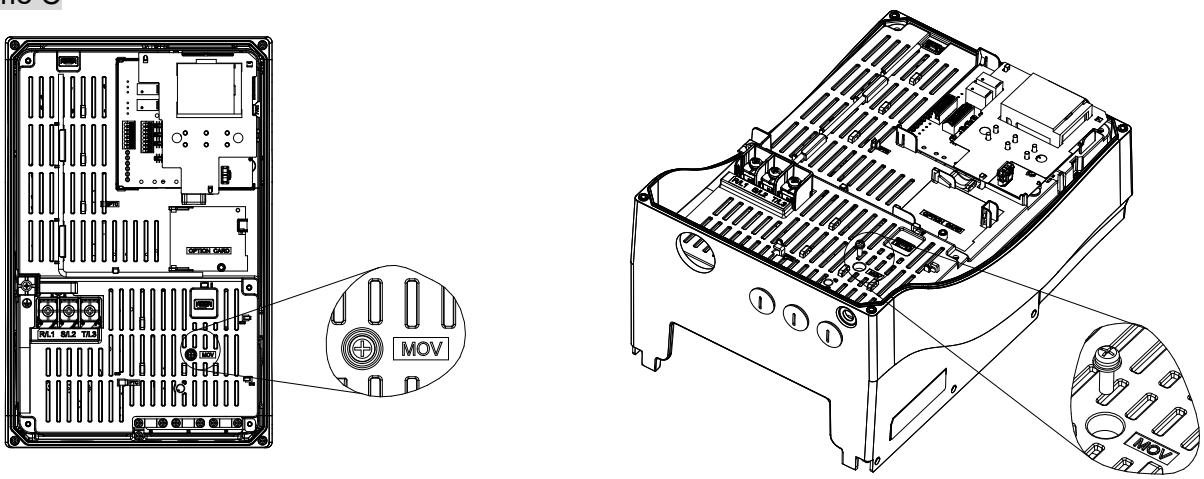

Isolating main power from ground

When the power distribution system for the drive is a floating ground system (IT Systems) or an asymmetric ground system (Corner Grounded TN Systems), you must remove the RFI jumper. Voltage of any phase to the ground for either system may be larger than the voltage specifications of the drive's built-in surge absorber and common-mode capacitance. In this case, connecting RFI jumper to the ground may cause damage to the drive.

Important points regarding ground connection

- ☑ To ensure the safety of personnel, proper operation, and to reduce electromagnetic radiation, you must properly ground the motor and drive during installation.
- ☑ The diameter of the grounding cables must comply with the local safety regulations.
- ☑ You must connect the shielded cable to the motor drive's ground to meet safety regulations.
- ☑ Only use the shielded cable as the ground for equipment when the aforementioned points are met.
- ☑ When installing multiple drives, do not connect the grounds of the drives in series but connect each drive to ground. The following pictures show the correct and wrong ways to connect the grounds.

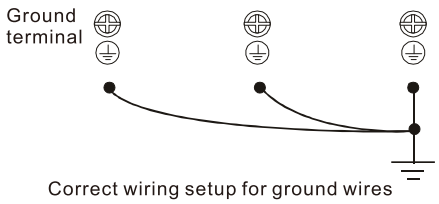

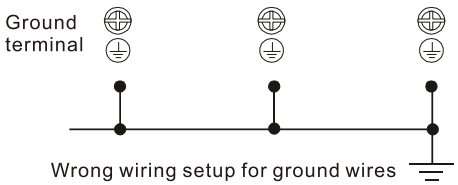

Pay particular attention to the following points:

- ☑ Do not remove the RFI jumper while the power is on.
- ☑ Make sure the main power is OFF before removing the RFI jumper.
- ☑ Removing the RFI jumper also cuts the capacitor conductivity of the surge absorber to ground and the built-in EMC filter capacitors. Compliance with the EMC specifications is no longer guaranteed.
- ☑ Do not remove the RFI jumper if the mains power is a symmetrical grounded power system in order to maintain the efficiency for EMC circuit.
- ☑ Remove the RFI jumper when conducting high voltage tests. When conducting a high voltage test to the entire facility, disconnect the mains power and the motor if the leakage current is too high.

Floating Ground System (IT Systems)

A floating ground system is also called an IT system, an ungrounded system, or a high impedance/resistance (greater than 30 Ω) grounded system.

- ☑ Remove the RFI jumper to disconnect the ground cable from the internal filter capacitor and surge absorber.
- ☑ Do not install an external RFI/EMC filter. The external EMC filter passes through a filter capacitor and connects power input to the ground. This is very dangerous and damages the motor drive.
- ☑ Disconnecting the ground cable from the filter prevents damage to the motor drive but compliance with EMC is no longer guaranteed.
- ☑ In situations where EMC is required, check for excess electromagnetic radiation affecting nearby low-voltage circuits. In some situations, the adapter and cable naturally provide enough suppression. If in doubt, install an extra electrostatic shielded cable on the power supply side between the main circuit and the control terminals to increase shielding.

Asymmetric Ground System (Corner Grounded TN Systems)

Caution: Do not remove the RFI jumper while power to the input terminal of the drive is ON.

In the following four situations, you must remove the RFI jumper. This is to prevent the system from grounding through the RFI and filter capacitors and damaging the drive.

You must remove the RFI jumper for an asymmetric ground system	
1. Grounding at a corner in a triangle configuration 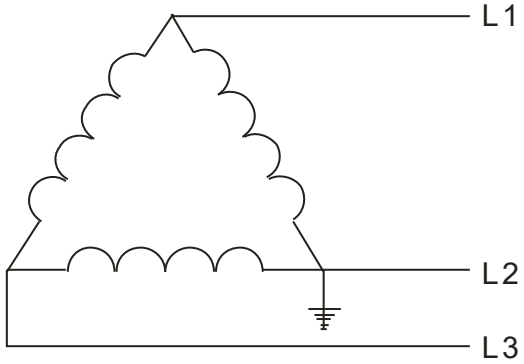 	2. Grounding at a midpoint in a polygonal configuration 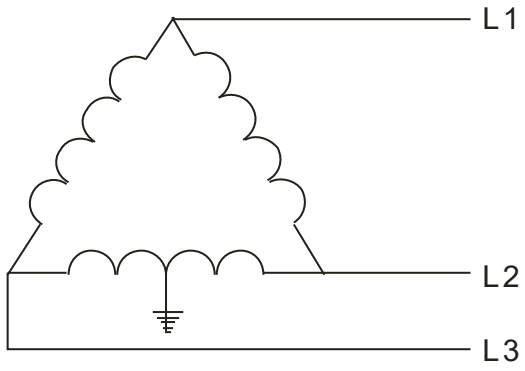
3. Grounding at one end in a single-phase configuration 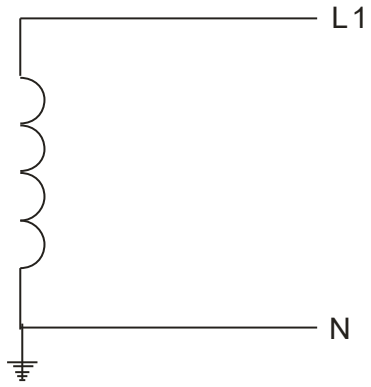 	4. No stable neutral grounding in a three-phase autotransformer configuration 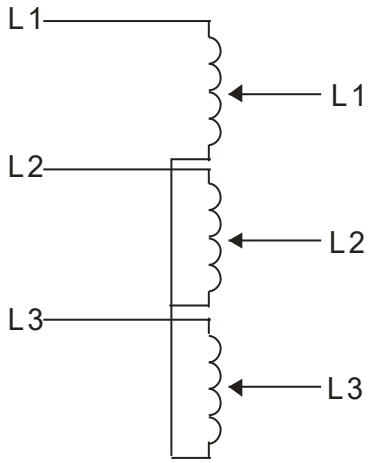
You can use the RFI jumper for a symmetrical grounding power system	
In a situation with a symmetrical grounding power system, you can use the RFI jumper to maintain the effect of the built-in EMC filter and surge absorber. For example, the diagram on the right is a symmetrical grounding power system. 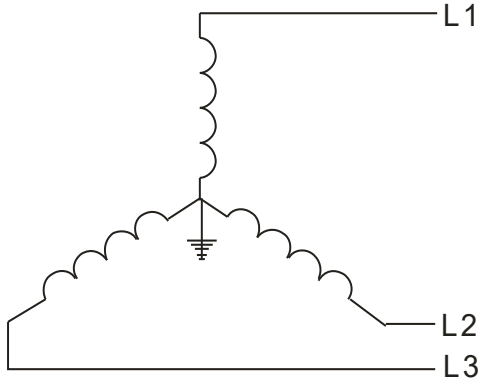 	

Chapter 2 Dimensions

2-1 The Size of the AC Motor Drive

2-2 The Size of the MPD

2-3 The Size of the Motor Axle

2-4 The Weight of the MPD

2-1 The Size of the AC Motor Drive

Frame A: VFD1A6MP43JNNAA; VFD1A6MP43JFNAA; VFD3A3MP43JNNAA; VFD3A3MP43JFNAA; VFD4A7MP43JNNAA; VFD4A7MP43JFNAA; VFD6A2MP43JNNAA; VFD6A2MP43JFNAA; VFD8A5MP43JNNAA; VFD8A5MP43JFNAA; VFD11AMP43JNNAA

Frame B: VFD11AMP43JFNAA; VFD15AMP43JNNAA; VFD15AMP43JFNAA

Frame C: VFD24AMP43JNNAA; VFD24AMP43JFNAA; VFD31AMP43JNNAA; VFD31AMP43JFNAA; VFD39AMP43JNNAA; VFD39AMP43JFNAA; VFD45AMP43JNNAA; VFD45AMP43JFNAA

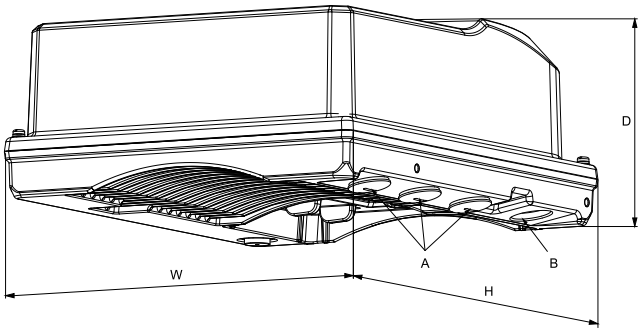

Figure 2-1 Frame A / B

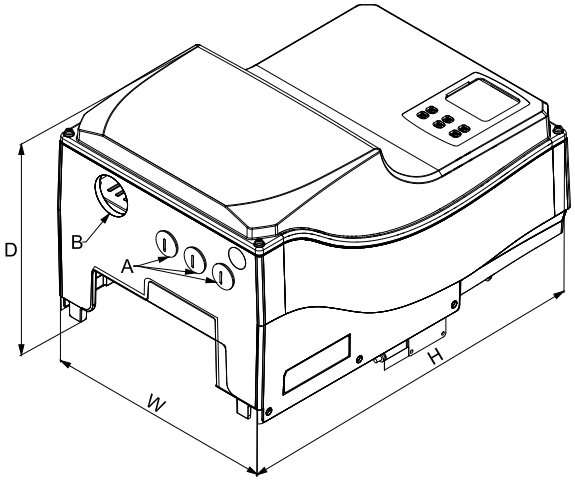

Figure 2-2 Frame C

Unit: mm (inch)

Frame	Power (kW)	Length	Width	Height	Waterproof Connector	
		H	W	D	A	B
A	0.75	290 (11.42)	237 (9.33)	115 (4.53)	M20	M25
	1.5					
	2.2					
	3					
	4					
	5.5					
B		322 (12.68)	277 (10.91)			
	7.5					
C	11	386 (15.19)	255 (10.03)	214 (8.42)	M20	M40
	15					
	18.5					
	22					

Table 2-1

2-2 The Size of the MPD

IM B5, IMV1 (with large flange)

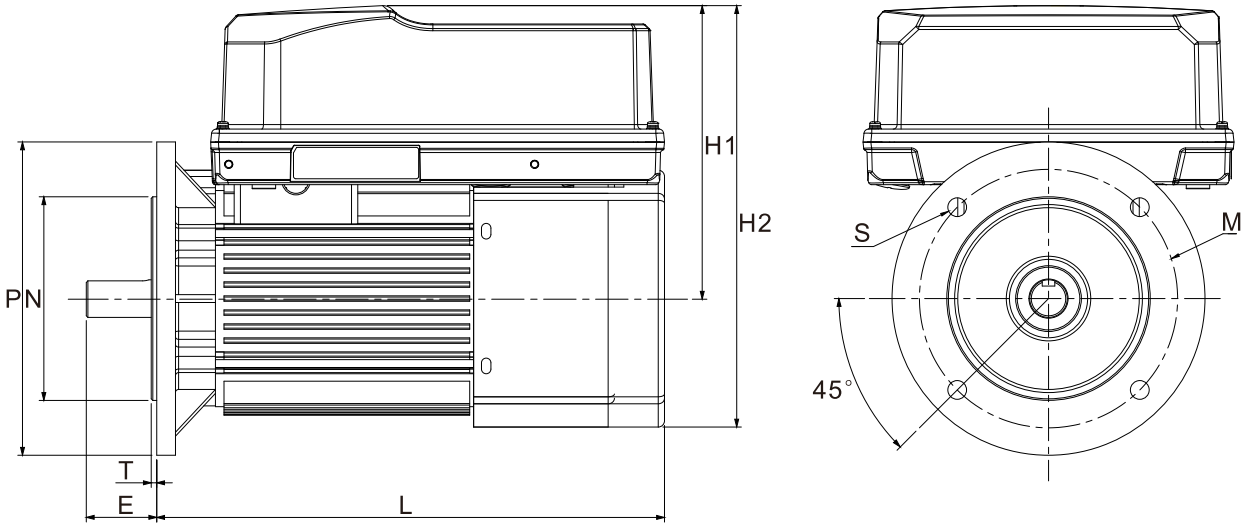

Figure 2-3

Unit: mm (inch)

Model name (MPD)	Frame (AC motor drive)	Frame and model name (Motor)	P	N	T	E	L	H1	H2	S	M
MPD75B30C43N2B MPD75B30C43F2B	A	80-1 MSI75B-30CDXS2B1AP	200 (7.88)	130 (5.12)	3.5 (0.14)	40 (1.58)	323 (12.7)	191.1 (7.52)	272.3 (10.72)	12 (0.48)	165 (6.5)
MPD15C30C43N2B MPD15C30C43F2B MPD22C30C43N2B MPD22C30C43F2B		80-2 MSI15C-30CDXS2B1AP MSI22C-30CDXS2B1AP				50 (1.97)	323 (12.7)				
MPD30C30C43N2B MPD30C30C43F2B MPD40C30C43N2B MPD40C30C43F2B1		90 MSI30C-30CDXS2B1AP MSI40C-30CDXS2B1AP	250 (9.85)	180 (7.09)	4 (0.16)	60 (2.37)	336 (13.2)	201.9 (7.95)	291.5 (11.48)	14.5 (0.58)	215 (8.47)
MPD55C30C43N2B	A	100-1 MSI55C-30CDXS2B1AP	300 (11.82)	230 (9.06)		80 (3.15)	340 (13.3)	211.3 (8.32)	308.1 (12.13)		265 (10.44)
MPD55C30C43F2B MPD75C30C43N2B MPD75C30C43F2B1	B	100-2 MSI55C-30CDXS2BFAP MSI75C-30CDXS2B1AP					371 (14.6)				

Table 2-2

IM B14, IMV18 (with small flange)

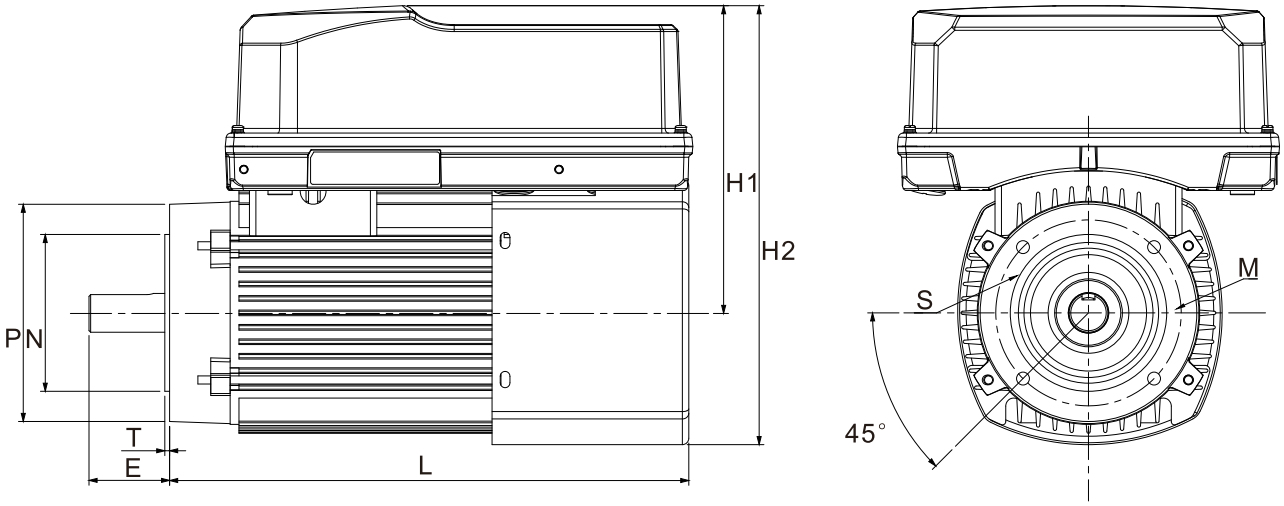

Figure 2-4

Unit: mm (inch)

Model name (MPD)	Frame (AC motor drive)	Frame and model name (Motor)	P	N	T	E	L	H1	H2	S	M
MPD75B30C43N2D MPD75B30C43F2D	A	80-1 MSI75B-30CDXS2D1AP	129 (5.08)	80 (3.15)	3.0 (0.12)	40 (1.58)	323 (12.7)	191.1 (7.52)	272.3 (10.72)	M6	100 (3.94)
MPD15C30C43N2D MPD15C30C43F2D MPD22C30C43N2D MPD22C30C43F2D		80-2 MSI15C-30CDXS2D1AP MSI22C-30CDXS2D1AP	134 (5.28)	95 (3.75)		50 (1.97)	323 (12.7)			M8	115 (4.53)
MPD30C30C43N2D MPD30C30C43F2D1 MPD40C30C43N2D MPD40C30C43F2D		90 MSI30C-30CDXS2D1AP MSI40C-30CDXS2D1AP	148 (5.83)	110 (4.34)	3.5 (0.14)	60 (2.37)	336 (13.2)	201.9 (7.95)	291.5 (11.48)		130 (5.12)
MPD55C30C43N2D	A	100-1 MSI55C-30CDXS2D1AP	184 (7.25)	130 (5.12)	4 (0.16)	80 (3.15)	340 (13.3)	211.3 (8.32)	308.1 (12.13)	M10	165 (6.5)
MPD55C30C43F2D MPD75C30C43N2D MPD75C30C43F2D	B	100-2 MSI55C-30CDXS2DFAP MSI75C-30CDXS2D1AP					371 (14.6)				

Table 2-3

2-3 The Size of the Motor Axle

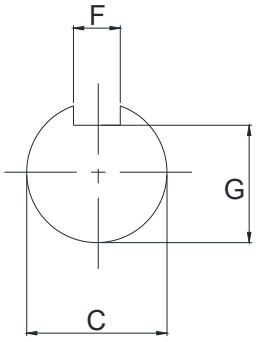

Figure 2-5

Unit: mm (inch)

Model name (MPD)	Frame and model name (Motor)	F	G	C
MPD75B30C43N2B MPD75B30C43N2D MPD75B30C43F2B MPD75B30C43F2D	80-1 MSI75B-30CDXS2B1AP MSI75B-30CDXS2D1AP	6 (0.24)	15.5 (0.62)	19 (0.75)
MPD15C30C43N2B MPD15C30C43N2D MPD15C30C43F2B MPD15C30C43F2D MPD22C30C43N2B MPD22C30C43N2D MPD22C30C43F2B MPD22C30C43F2D	80-2 MSI15C-30CDXS2B1AP MSI22C-30CDXS2B1AP MSI15C-30CDXS2D1AP MSI22C-30CDXS2D1AP	8 (0.32)	20 (0.79)	24 (0.95)
MPD30C30C43N2B MPD30C30C43N2D MPD30C30C43F2B MPD30C30C43F2D1 MPD40C30C43N2B MPD40C30C43N2D MPD40C30C43F2B1 MPD40C30C43F2D	90 MSI30C-30CDXS2B1AP MSI40C-30CDXS2B1AP MSI30C-30CDXS2D1AP MSI40C-30CDXS2D1AP		24 (0.95)	28 (1.11)
MPD55C30C43N2B MPD55C30C43N2D	100-1 MSI55C-30CDXS2B1AP MSI55C-30CDXS2D1AP	10 (0.4)	33 (1.3)	38 (1.5)
MPD55C30C43F2B MPD55C30C43F2D MPD75C30C43N2B MPD75C30C43N2D MPD75C30C43F2B1 MPD75C30C43F2D	100-2 MSI55C-30CDXS2BFAP MSI75C-30CDXS2B1AP MSI55C-30CDXS2DFAP MSI75C-30CDXS2D1AP			

Table 2-4

2-4 The Weight of the MPD

Model name (MPD)	Model name (AC motor drive)	Power (kW)	Frame (Motor)	Model name (Motor)	Type (Flange)	Weight (kg (lb))		
						AC motor drive	Motor	MPD
MPD75B30C43N2B	VFD1A6MP43JNNAA	0.75	80-1	MSI75B-30CDXS2B1AP	IM B5, IMV1	3.5 (7.8)	11.3 (25.0)	14.8 (32.7)
MPD75B30C43N2D				MSI75B-30CDXS2D1AP	IM B14, IMV18		9.2 (20.3)	12.7 (28.0)
MPD75B30C43F2B	VFD1A6MP43JFNAA			MSI75B-30CDXS2B1AP	IM B5, IMV1	3.7 (8.2)	11.3 (25)	15.0 (33.1)
MPD75B30C43F2D				MSI75B-30CDXS2D1AP	IM B14, IMV18		9.2 (20.3)	12.9 (28.5)
MPD15C30C43N2B	VFD3A3MP43JNNAA	1.5	80-2	MSI15C-30CDXS2B1AP	IM B5, IMV1	3.5 (7.8)	13.6 (30.0)	17.1 (37.7)
MPD15C30C43N2D				MSI15C-30CDXS2D1AP	IM B14, IMV18		12.2 (26.9)	15.7 (34.7)
MPD15C30C43F2B	VFD3A3MP43JFNAA			MSI15C-30CDXS2B1AP	IM B5, IMV1	3.7 (8.2)	13.6 (30.0)	17.3 (38.2)
MPD15C30C43F2D				MSI15C-30CDXS2D1AP	IM B14, IMV18		12.2 (26.9)	15.9 (35.1)
MPD22C30C43N2B	VFD4A7MP43JNNAA	2.2	80-2	MSI22C-30CDXS2B1AP	IM B5, IMV1	3.5 (7.8)	15.3 (33.8)	18.8 (41.5)
MPD22C30C43N2D				MSI22C-30CDXS2D1AP	IM B14, IMV18		13.9 (30.7)	17.4 (38.4)
MPD22C30C43F2B	VFD4A7MP43JFNAA			MSI22C-30CDXS2B1AP	IM B5, IMV1	3.7 (8.2)	15.3 (33.8)	19.0 (41.9)
MPD22C30C43F2D				MSI22C-30CDXS2D1AP	IM B14, IMV18		13.9 (30.7)	17.6 (38.8)
MPD30C30C43N2B	VFD6A2MP43JNNAA	3	90	MSI30C-30CDXS2B1AP	IM B5, IMV1	3.6 (8.0)	19.1 (42.1)	22.7 (50.1)
MPD30C30C43N2D				MSI30C-30CDXS2D1AP	IM B14, IMV18		16.5 (36.4)	20.1 (44.4)
MPD30C30C43F2B	VFD6A2MP43JFNAA			MSI30C-30CDXS2B1AP	IM B5, IMV1	3.8 (8.4)	19.1 (42.1)	22.9 (50.5)
MPD30C30C43F2D1				MSI30C-30CDXS2D1AP	IM B14, IMV18		16.5 (36.4)	20.3 (44.8)
MPD40C30C43N2B	VFD8A5MP43JNNAA	4	90	MSI40C-30CDXS2D1AP	IM B5, IMV1	3.6 (8.0)	19.9 (43.9)	23.5 (51.8)
MPD40C30C43N2D				MSI40C-30CDXS2B1AP	IM B14, IMV18		17.3 (38.2)	20.9 (46.1)
MPD40C30C43F2B1	VFD8A5MP43JFNAA			MSI40C-30CDXS2D1AP	IM B5, IMV1	3.8 (8.4)	19.9 (43.9)	23.7 (52.3)
MPD40C30C43F2D				MSI40C-30CDXS2B1AP	IM B14, IMV18		17.3 (38.2)	21.1 (46.6)
MPD55C30C43N2B	VFD11AMP43JNNAA	5.5	100-1	MSI55C-30CDXS2B1AP	IM B5, IMV1	3.7 (8.2)	27.7 (61.1)	31.4 (69.3)
MPD55C30C43N2D				MSI55C-30CDXS2D1AP	IM B14, IMV18		24.2 (53.4)	27.9 (61.5)
MPD55C30C43F2B	VFD11AMP43JFNAA		100-2	MSI55C-30CDXS2BFAP	IM B5, IMV1	4.1 (9.1)	27.7 (61.1)	31.8 (70.1)
MPD55C30C43F2D				MSI55C-30CDXS2DFAP	IM B14, IMV18		24.2 (53.4)	28.3 (62.4)
MPD75C30C43N2B	VFD15AMP43JNNAA	7.5	100-2	MSI75C-30CDXS2B1AP	IM B5, IMV1		31.3 (69.0)	35.4 (78.1)
MPD75C30C43N2D				MSI75C-30CDXS2D1AP	IM B14, IMV18		27.8 (61.3)	31.9 (70.4)
MPD75C30C43F2B1	VFD15AMP43JFNAA			MSI75C-30CDXS2B1AP	IM B5, IMV1	4.2 (9.3)	31.3 (69.0)	35.5 (78.3)
MPD75C30C43F2D				MSI75C-30CDXS2D1AP	IM B14, IMV18		27.8 (61.3)	32.0 (70.6)
---	VFD24AMP43JNNAA	11	---	---	---	9 (20.1)	---	---
---	VFD24AMP43JFNAA	11	---	---	---	9.2 (20.6)	---	---
---	VFD31AMP43JNNAA	15	---	---	---	9 (20.1)	---	---
---	VFD31AMP43JFNAA	15	---	---	---	9.2 (20.6)	---	---
---	VFD39AMP43JNNAA	18.5	---	---	---	9 (20.1)	---	---
---	VFD39AMP43JFNAA	18.5	---	---	---	9.2 (20.6)	---	---
---	VFD45AMP43JNNAA	22	---	---	---	9 (20.1)	---	---
---	VFD45AMP43JFNAA	22	---	---	---	9.2 (20.6)	---	---

Table 2-5

Model name (adapter plate)	Frame	Weight (kg (lb))
MKMP-MAPA1	A	2.5 (5.6)
MKMP-MAPB1	B	3 (6.7)
MKMP-MAPC1	C	5 (11.2)

Table 2-6

Chapter 3 Installation

3-1 Mounting Clearance

3-2 Airflow and Power Dispassion

3-1 Mounting Clearance

☑ Prevent fiber particles, scraps of paper, shredded wood, sawdust, metal particles, etc. from adhering to the heat sink.

☑ Install the AC motor drive in a metal cabinet. When installing one drive below another one, use a metal separator between the AC motor drives to prevent mutual heating and to prevent the risk of fire accident.

☑ Install the AC motor drive in a Pollution Degree 2 (IEC/EN 60664-1) environment.

☑ Install the AC motor drive in an IP55 and below IP rating interior environment, do not use the AC motor drive in an environment that exceeds the IP rating.

The appearances shown in the following figures are for reference only. The actual motor drives may look different.

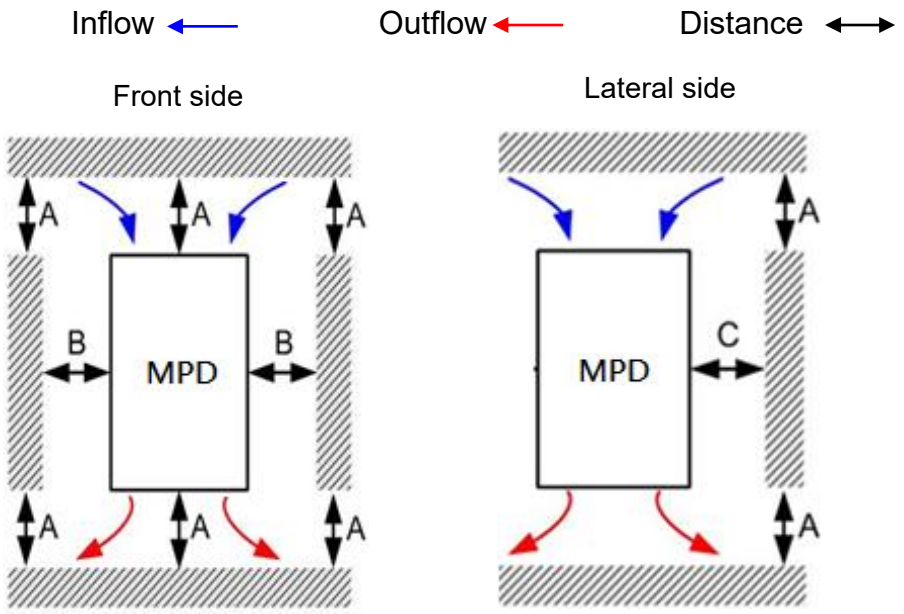

Figure 3-1

Figure 3-2

MPD series

Frame	Model name	Clearance (Unit: mm)			Maximum ambient temperature (°C)	
		A	B	C	Without derating	With derating
A	MPD75B30C43N2B	120	50	50	40	50
	MPD75B30C43N2D					
	MPD75B30C43F2B					
	MPD75B30C43F2D					
	MPD15C30C43N2B					
	MPD15C30C43N2D					
	MPD15C30C43F2B					
	MPD15C30C43F2D					
	MPD22C30C43N2B					
	MPD22C30C43N2D					
	MPD22C30C43F2B					
	MPD22C30C43F2D					

Frame	Model name	Clearance (Unit: mm)			Maximum ambient temperature (°C)	
		A	B	C	Without derating	With derating
A	MPD30C30C43N2B	135	60	60	40	50
	MPD30C30C43N2D					
	MPD30C30C43F2B					
	MPD30C30C43F2D1					
	MPD40C30C43N2B					
	MPD40C30C43N2D					
	MPD40C30C43F2B1					
	MPD40C30C43F2D					
	MPD55C30C43N2B	150	70	70		
	MPD55C30C43N2D					
B	MPD55C30C43F2B					
	MPD55C30C43F2D					
	MPD75C30C43N2B					
	MPD75C30C43N2D					
	MPD75C30C43F2B1					
	MPD75C30C43F2D					

Table 3-1

Single drive installation

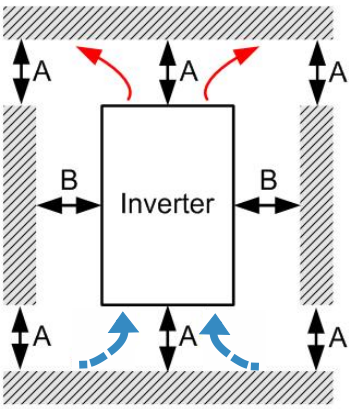

Figure 3-3

Side-by-side horizontal installation

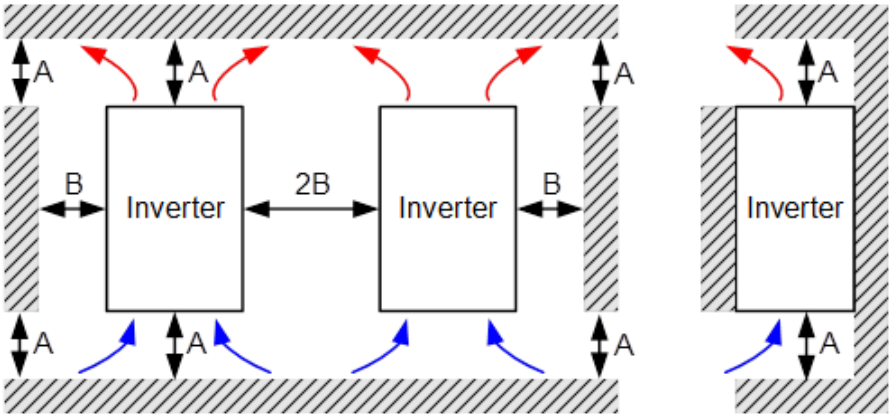

Figure 3-4

MP300 series

Frame	Model name	Clearance (Unit: mm)	
		A	B
A	VFD1A6MP43JNNAA	50	0
	VFD1A6MP43JFNAA		
	VFD3A3MP43JNNAA		
	VFD3A3MP43JFNAA		
	VFD4A7MP43JNNAA		
	VFD4A7MP43JFNAA		

Frame	Model name	Clearance (Unit: mm)	
		A	B
	VFD6A2MP43JNNAA	50	0
	VFD6A2MP43JFNAA		
	VFD8A5MP43JNNAA		
	VFD8A5MP43JFNAA		
	VFD11AMP43JNNAA		
B	VFD11AMP43JFNAA		
	VFD15AMP43JNNAA		
	VFD15AMP43JFNAA		
C	VFD24AMP43JNNAA		
	VFD24AMP43JFNAA		
	VFD31AMP43JNNAA		
	VFD31AMP43JFNAA		
	VFD39AMP43JNNAA		
	VFD39AMP43JFNAA		
	VFD45AMP43JNNAA		
	VFD45AMP43JFNAA		

Table 3-2

3-2 Airflow and Power Dispassion

MPD series

Frame	Model name	Airflow rate		Power dispassion
		(Unit: cfm)	(Unit: m^3/hr)	(Unit: W)
A	MPD75B30C43N2B	31.1	52.8	155
	MPD75B30C43N2D			
	MPD75B30C43F2B			156
	MPD75B30C43F2D			
	MPD15C30C43N2B			269
	MPD15C30C43N2D			
	MPD15C30C43F2B			271
	MPD15C30C43F2D			
	MPD22C30C43N2B			341
	MPD22C30C43N2D			
	MPD22C30C43F2B			343
	MPD22C30C43F2D			
	MPD30C30C43N2B	46.7	79.2	416
	MPD30C30C43N2D			
	MPD30C30C43F2B			419
	MPD30C30C43F2D1			
	MPD40C30C43N2B			512
	MPD40C30C43N2D			
	MPD40C30C43F2B1			515
	MPD40C30C43F2D			
	MPD55C30C43N2B	66.1	112.2	633
	MPD55C30C43N2D			
B	MPD55C30C43F2B			637
	MPD55C30C43F2D			
	MPD75C30C43N2B			775
	MPD75C30C43N2D			
	MPD75C30C43F2B1			780
	MPD75C30C43F2D			

Table 3-3

MP300 series

Frame	Models	Airflow rate		Power dispassion
		(Unit: cfm)	(Unit: m^3/hr)	(Unit: W)
A	VFD1A6MP43JNNAA	13.8	23.3	36
	VFD1A6MP43JNNAA			
	VFD1A6MP43JFNAA			37
	VFD1A6MP43JFNAA			
	VFD3A3MP43JNNAA			82
	VFD3A3MP43JNNAA			
	VFD3A3MP43JFNAA			84
	VFD3A3MP43JFNAA			
	VFD4A7MP43JNNAA			102
	VFD4A7MP43JNNAA			
	VFD4A7MP43JFNAA			104
	VFD4A7MP43JFNAA			
	VFD6A2MP43JNNAA			123
	VFD6A2MP43JNNAA			
	VFD6A2MP43JFNAA			126
	VFD6A2MP43JFNAA			
	VFD8A5MP43JNNAA			155
	VFD8A5MP43JNNAA			
	VFD8A5MP43JFNAA			158
	VFD8A5MP43JFNAA			
	VFD11AMP43JNNAA			193
	VFD11AMP43JNNAA			
B	VFD11AMP43JFNAA	74.0	125.1	197
	VFD11AMP43JFNAA			
	VFD15AMP43JNNAA			236
	VFD15AMP43JNNAA			
	VFD15AMP43JFNAA			241
	VFD15AMP43JFNAA			
C	VFD24AMP43JNNAA	86.5	147	414
	VFD24AMP43JFNAA			
	VFD31AMP43JNNAA			539
	VFD31AMP43JFNAA			
	VFD39AMP43JNNAA			667
	VFD39AMP43JFNAA			
	VFD45AMP43JNNAA			774
	VFD45AMP43JFNAA			

Table 3-4

Chapter 4 Wiring

4-1 System Wiring Diagram

4-2 Wiring

4-3 The Assembly Of Motor And Ac Motor Drive

4-4 The Wiring Of Multi-Pump Controlled Communication Cable

4-5 The Wiring Of Pressure Sensor

After removing the front cover, verify that the power and control terminals are clearly noted. Read the following precautions before wiring.

DANGER	☑ Turn off the AC motor drive power before doing any wiring. A charge with hazardous voltages may remain in the DC bus capacitors even after the power has been turned off for a short time. If the AC motor drive does not fully discharge, and assemble the wiring with a residual voltage may cause personal injury, sparks and a short circuit. Ensure your safety to use AC motor drive with no voltage. ☑ Only qualified personnel familiar with AC motor drives are allowed to perform installation, wiring and commissioning. Make sure the power is turned off before wiring to prevent electric shock. ☑ Make sure that power is only applied to the R/L1, S/L2, and T/L3 terminals. Failure to comply may result in damage to the equipment. The voltage and current must be in the range indicated on the nameplate (refer to Section 1-1 Nameplate Information for details). ☑ All units must be grounded directly to a common ground terminal to prevent damage from a lightning strike or electric shock and reduce noise interference. ☑ Tighten the screws of the main circuit terminals to prevent sparks caused by screws loosened due to vibration.
CAUTION	☑ For your safety, choose wires that comply with local regulations when wiring. ☑ Check the following items after finishing the wiring: 1. Are all connections correct? 2. Are there any loose wires? 3. Are there any short circuits between the terminals or to ground?

4-1 System Wiring Diagram

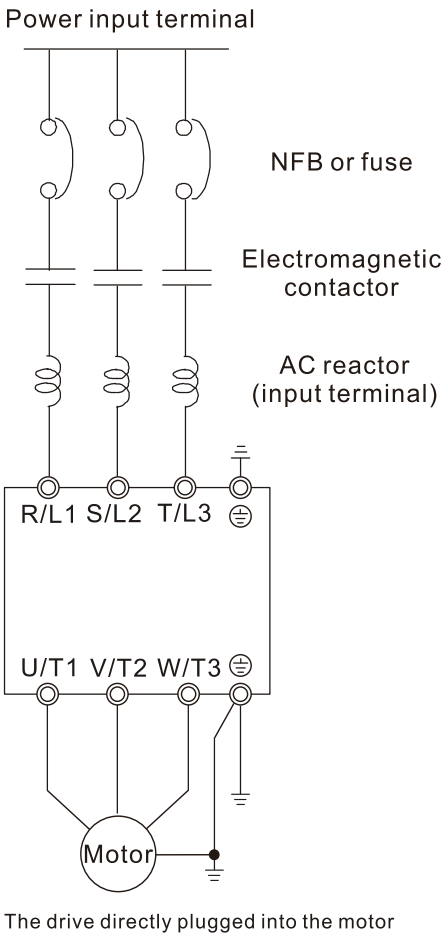

Figure 4-1

Power input terminal	Supply power according to the rated power specifications indicated in the manual. Refer to Chapter 09 Specifications for details.
NFB or fuse	There may be a large inrush current during power on. Refer to Section 7-1 NFB to select a suitable NFB or Section 7-2 Fuse Specification Chart.
Electromagnetic contactor	Switching the power ON / OFF on the primary side of the electromagnetic contactor can make the drive work / stop, but frequent switching can cause machine failure. Do not switch ON / OFF more than once an hour. Do not use the electromagnetic contactor as the power switch for the drive; doing so shortens the life of the drive.
AC reactor (input terminal)	When the main power supply capacity is greater than 500 kVA, or when it switches into the phase capacitor, the instantaneous peak voltage and current generated may destroy the internal circuit of the drive. It is recommended that you install an input side AC reactor in the drive. This also improves the power factor and reduces power harmonics. The wiring distance should be within 10 m. Refer to Section 7-3 AC Reactor for details.

Table 4-1

4-2 Wiring

Input: three-phase power

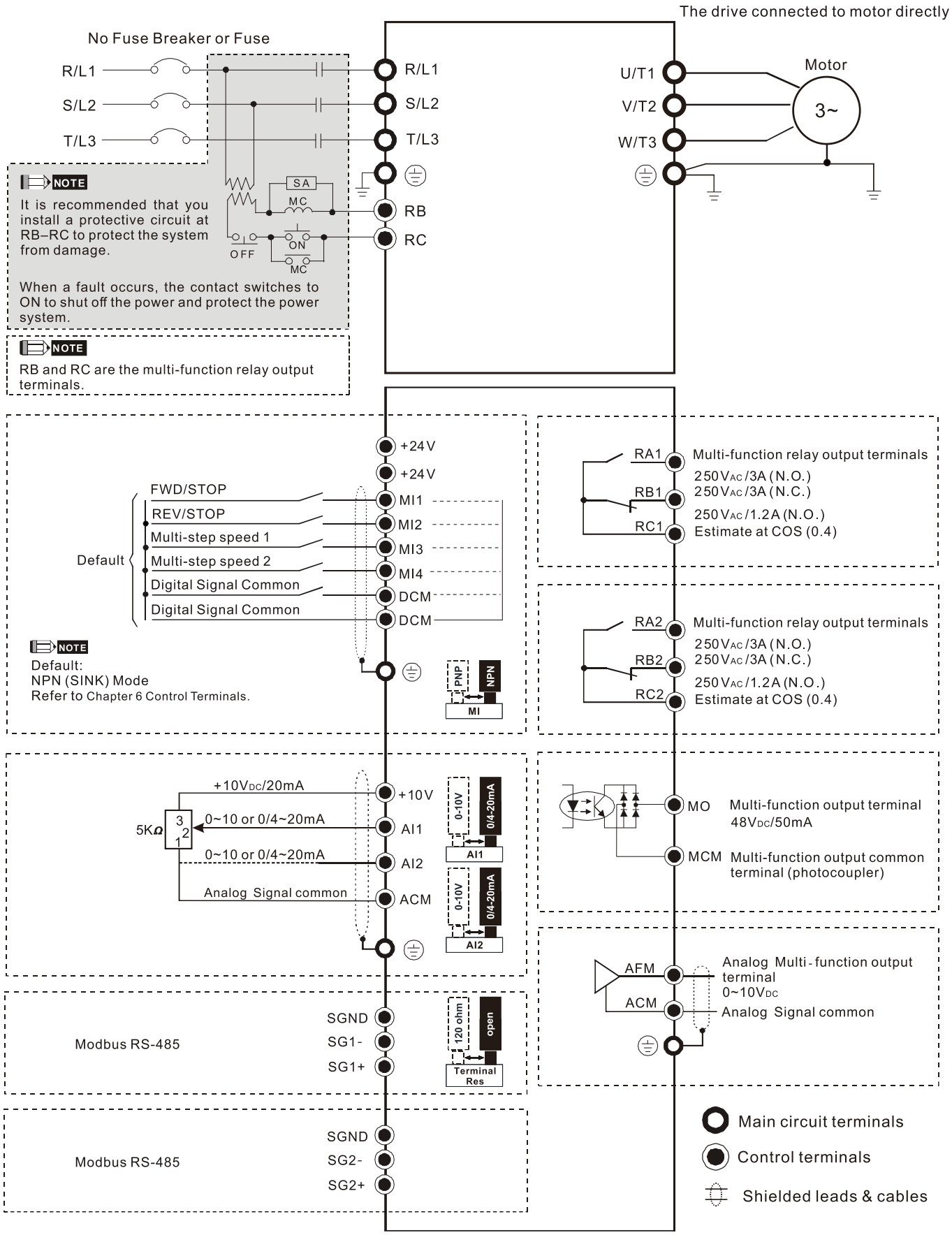

Figure 4-2

4-3 The Assembly of Motor and AC Motor Drive

4-3-1 Motor thermal wire selection (Skip this if thermal wire is not required)

1. Take the appropriate thermal wire out from the motor terminal box, there are KTY-84-130 and PTC-130.

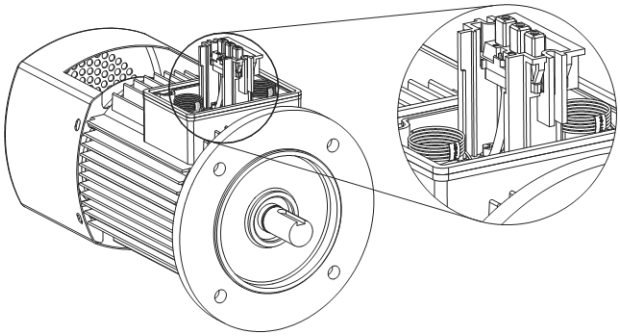

Figure 4-3

4-3-2 The assembly process of AC motor drive and motor

1. Use cross screwdriver to loosen the screws on the front cover of the AC motor drive, and then remove the front cover.
2. If the motor thermal wire is required, take out the appropriate thermal wire (see section 4-3-1) and pass through the hole from the inside case. Skip this step if the thermal wire is not required.
3. Assemble the AC motor drive and the motor according to the direction arrow shown in the Figure 4-4. If the thermal wire is assembled, pay attention that do not let the thermal wire exceed the waterproof ring's boundary on the motor terminal box, otherwise the thermal wire will be flatted and broken.
4. Screw up four M5 screws according to the positions shown in the Figure 4-4
   Screw Torque: 16–20 kgf-cm / [13.9–17.3 lb-in.] / [1.56–1.96 Nm]
5. Screw up the waterproof connector before starting the wiring.
6. Put the front cover back, and screw up the screws according to the order from a to d. Assemble the waterproof rubber seal strip correctly (frame A, frame B: to be on heatsink rib; frame C: to be on the front cover). Screw Torque: 16–18 kgf-cm / [13.8–15.5 lb-in.] / [1.57–1.76 Nm]

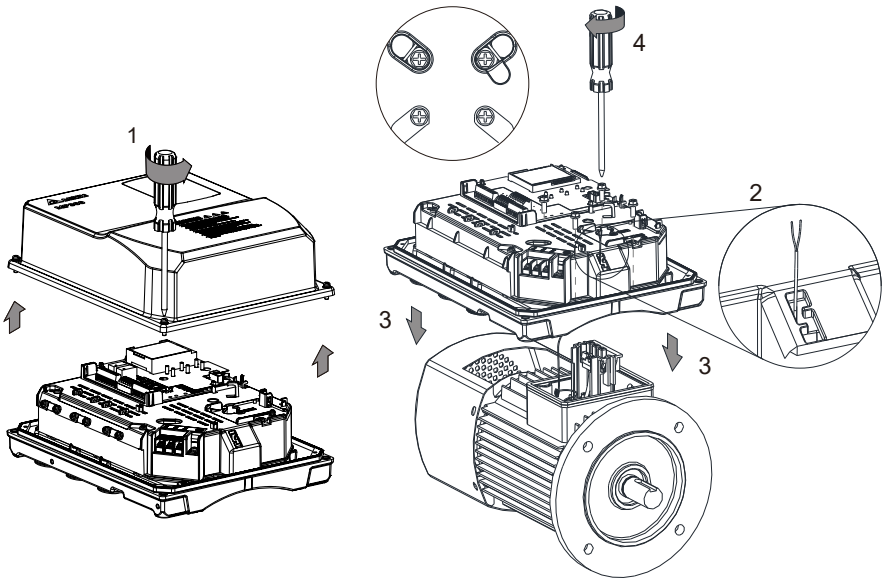

Figure 4-4

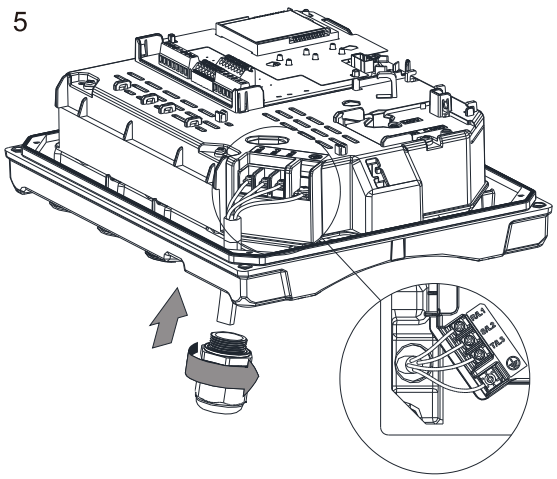

Figure 4-5

Suggested value of striping cable

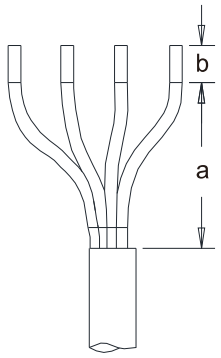

Unit: mm

Frame	R/L1, S/L2, T/L3, ⏚	
	a	b
A	60 [2.36]	8 [0.31]
B		

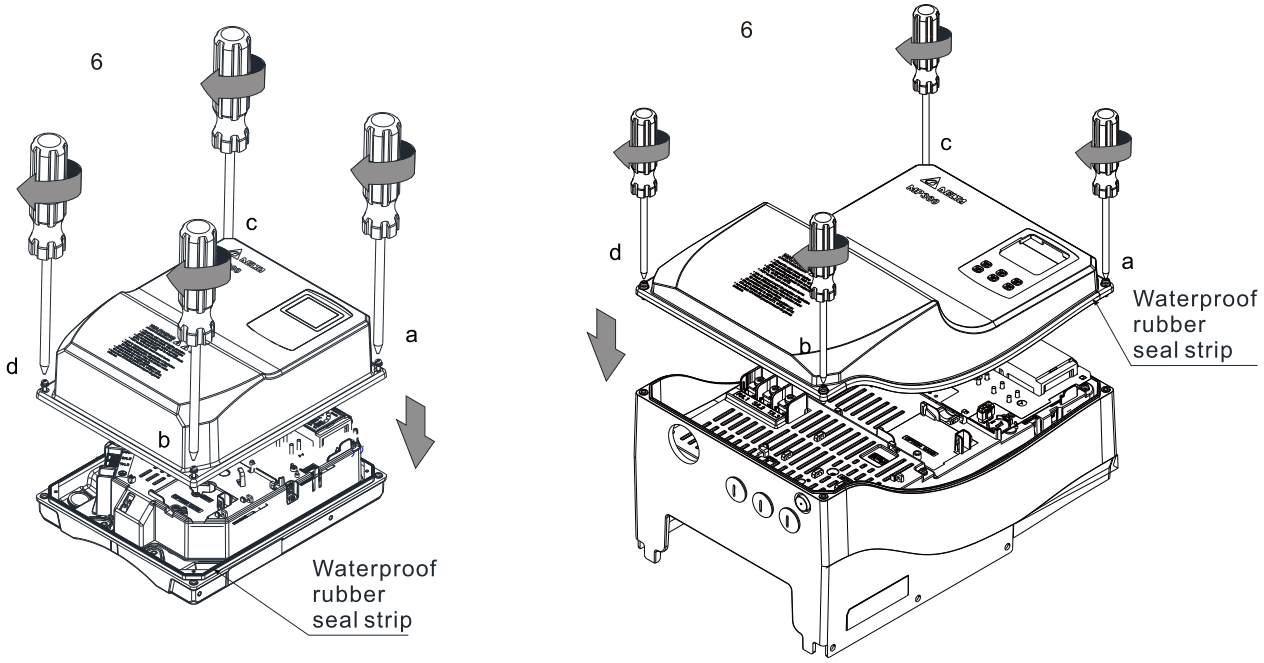

Figure 4-6 Left: frame A, B; Right: frame C

4-3-3 The Assembly of Temperature Sensor (KTY-84-130, PTC-130)

1. As explained in the section 4-3-1, take out the appropriate temperature sensor from the motor terminal box, and works with the step 1 to 4 in the section 4-3-2.
2. Every temperature sensor has two bare wires, no polarity and no order of priority to connect, one connects with ACM, and another one connects with AI1 or AI2.
3. Organize and fix the temperature sensor by the snap lock of the case.
4. Put the surplus wire segment of the temperature sensor into the hole as the direction arrow shown in the Figure 4-5.

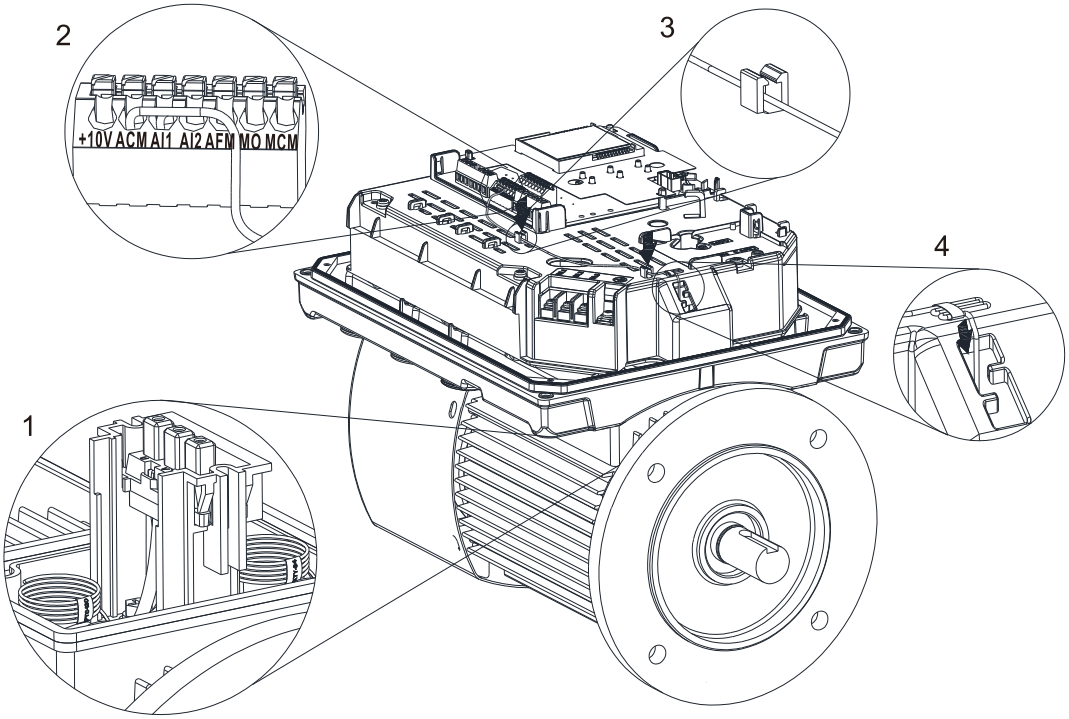

Figure 4-7 Frame A, B

4-4 The Wiring of Multi-pump Controlled Communication Cable

To use multi-pump function, you have to connect the first RS-485 port of each station in parallel (SG1- to SG1-; SG1+ to SG1+) in the beginning; if there is a need for connecting with a upper device (HMI), connect it to the second RS-485 port (SG2- / SG2+) of the absolute master (ID1). See the figure below.

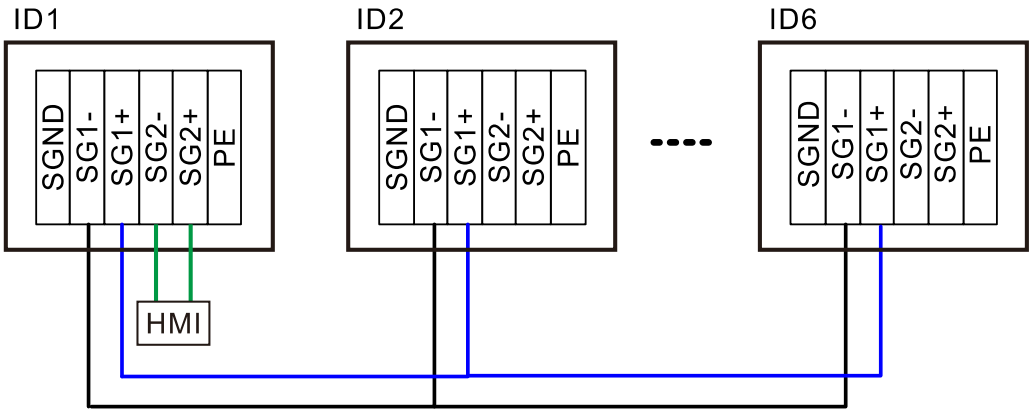

Figure 4-8

4-5 The Wiring of Pressure Sensor

Set multi-master function for the auto-change pump system, if require using the pressure feedback sensor signals to control the constant pressure in system, both master station and backup master station must have pressure signals feedback. In the situation, you can set one more pressure sensor for transferring feedback signals to the backup master station, or master station and backup master station use the same one.

Signal type	Source of power	Maximum numbers to connect
ACI	Internal power (+24V)	4
	External power (+30V)	6
AVI	Internal power (+24V)	6
	External power (+30V)	6

Single pump: one pressure sensor to one MP300

- **ACI**

ACI mode with internal power: single pump

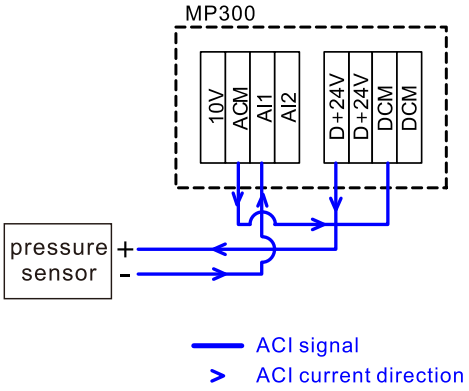

Figure 4-9

ACI mode with external power: single pump

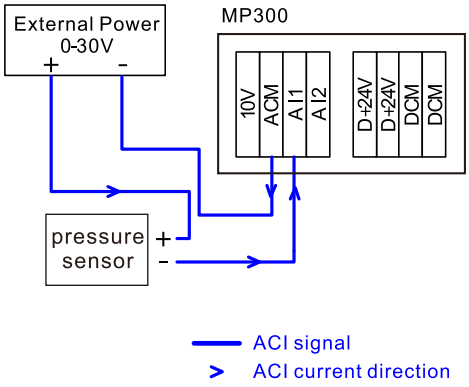

Figure 4-10

- **AVI**

AVI mode with internal power: single pump

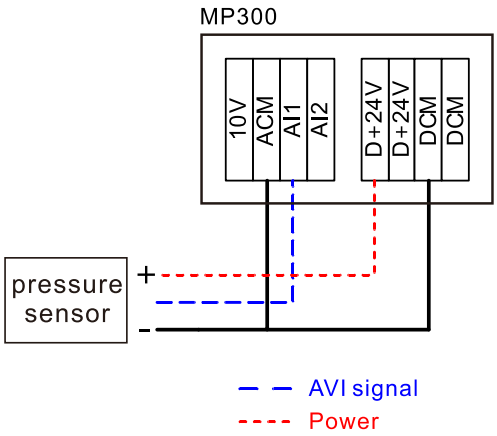

Figure 4-11

AVI mode with external power: single pump

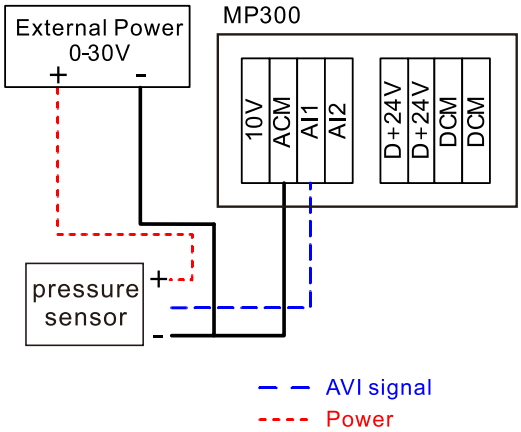

Figure 4-12

Multi-ump: one pressure sensor to more than one MP300

- **ACI**

ACI mode with internal power: multi-pump (Max.:4)

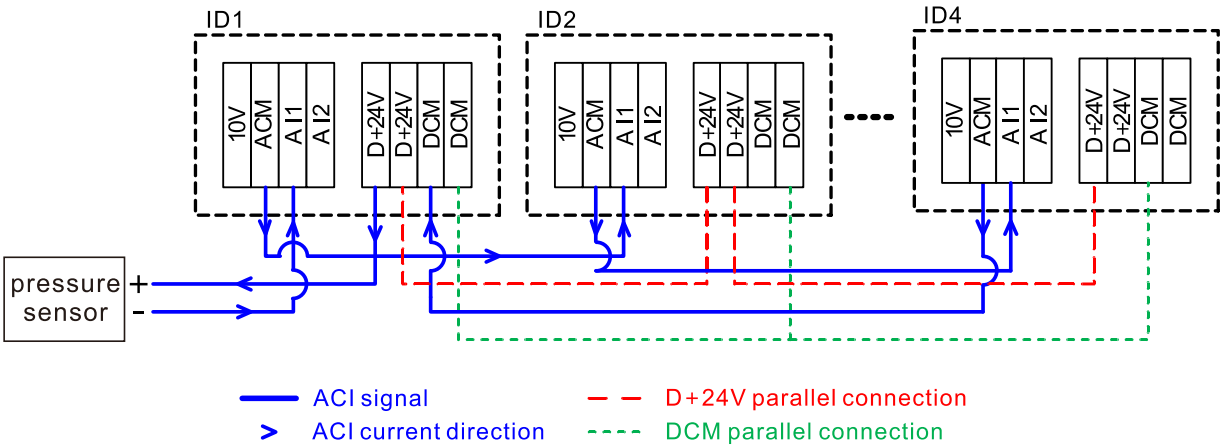

Figure 4-13

ACI mode with external power: multi-pump (Max.:6)

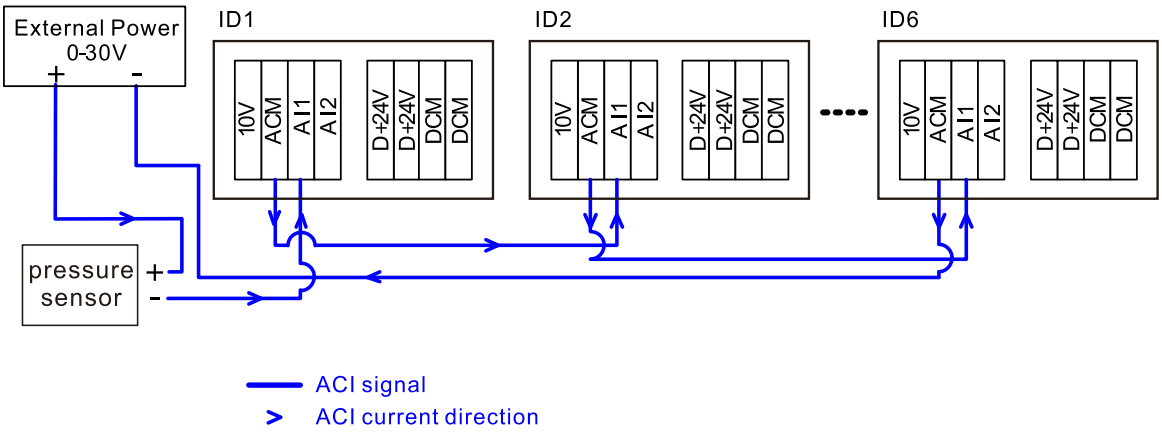

Figure 4-14

- **AVI**

AVI mode with internal power: multi-pump

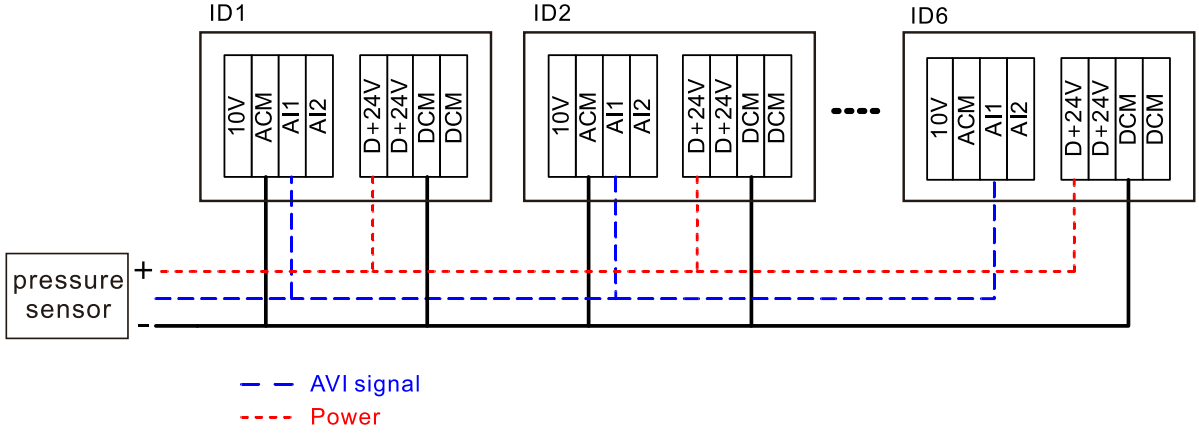

Figure 4-15

AVI mode with external power: multi-pump

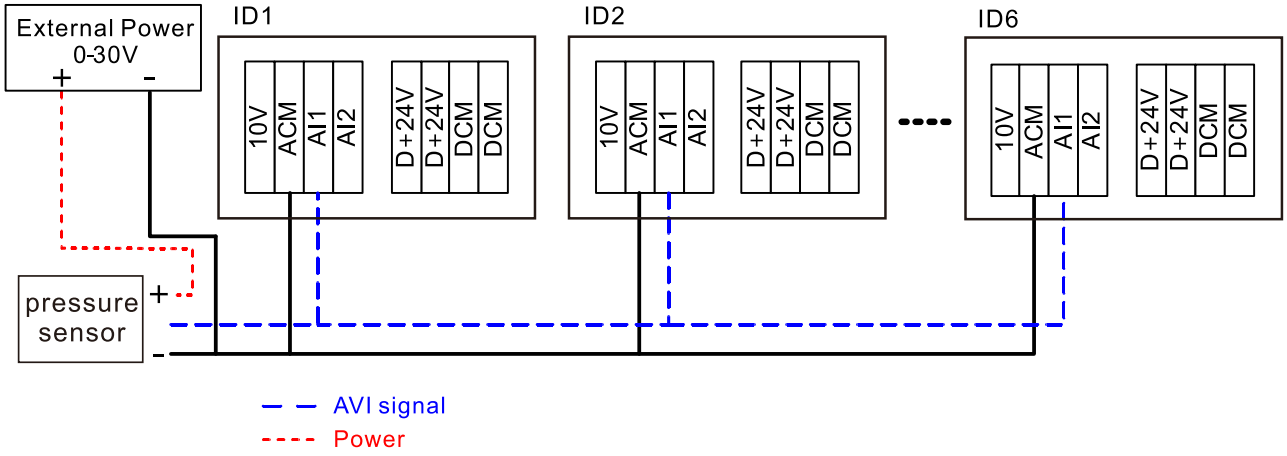

Figure 4-16

Chapter 5 Main Circuit Terminals

5-1 Main Circuit Diagram

5-2 Main Circuit Terminal Specifications

DANGER	☑ Tighten the screws in the main circuit terminal to prevent sparks caused by screws loosened due to vibration. ☑ Ensure proper insulation of the main circuit wiring in accordance with the relevant safety regulations.
CAUTION	Main input power terminals ☑ DO NOT connect a three-phase model to one-phase power. R/L1, S/L2 and T/L3 have no phase-sequence requirement; they can be connected in any sequence. ☑ You must install a NFB between the three-phase power input terminals and the main circuit terminals (R/L1, S/L2, T/L3). Add a magnetic contactor (MC) to the power input wiring to cut off power quickly and reduce malfunctions when the AC motor drive protection function activates. Both ends of the MC should have an R-C surge absorber. ☑ Use voltage and current within the specifications in Chapter 7. Refer to Chapter 09 Specifications for details. ☑ If install an earth leakage circuit breaker (ELCB) to the AC motor drive as a protection to the electrical leakage, choose industrial type or time-delay type to avoid malfunction. ☑ Use shielded wire or conduit for the power wiring and ground the two ends of the shielding or conduit. ☑ DO NOT run and stop the AC motor drives by turning the power ON and OFF. Run and stop the AC motor drives by sending the RUN and STOP commands through the control terminals or the keypad. If you still need to run and stop the AC motor drives by turning the power ON and OFF, do so no more often than ONCE per hour. ☑ To comply with UL standards, connect the drive to a three-phase three-wire (star connection, Y connection) or three-phase four-wire (star connection, Wye connection) system type of mains power system.

Remove the front cover

📖 Remove the front cover before wiring the main circuit terminals and control circuit terminals. Remove the cover according to the figures below.

Use cross screwdriver to loosen the screws on the front cover of the AC motor drive, and then remove the front cover.

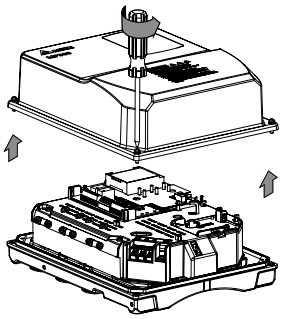

Figure 5-1 Frame A, B

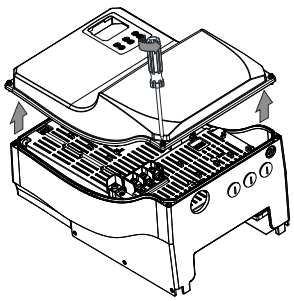

Figure 5-2 Frame C

Assemble the front cover

After completing the wiring of the main circuit terminals / control circuit terminals, make sure of assembling the waterproof rubber seal strip correctly (frame A, frame B: to be on heatsink rib: frame C: to be on the front cover), and assembling the front cover. Screw torque: 16–18 kgf-cm / [13.8–15.5 lb-in.] / [1.57–1.76 Nm]

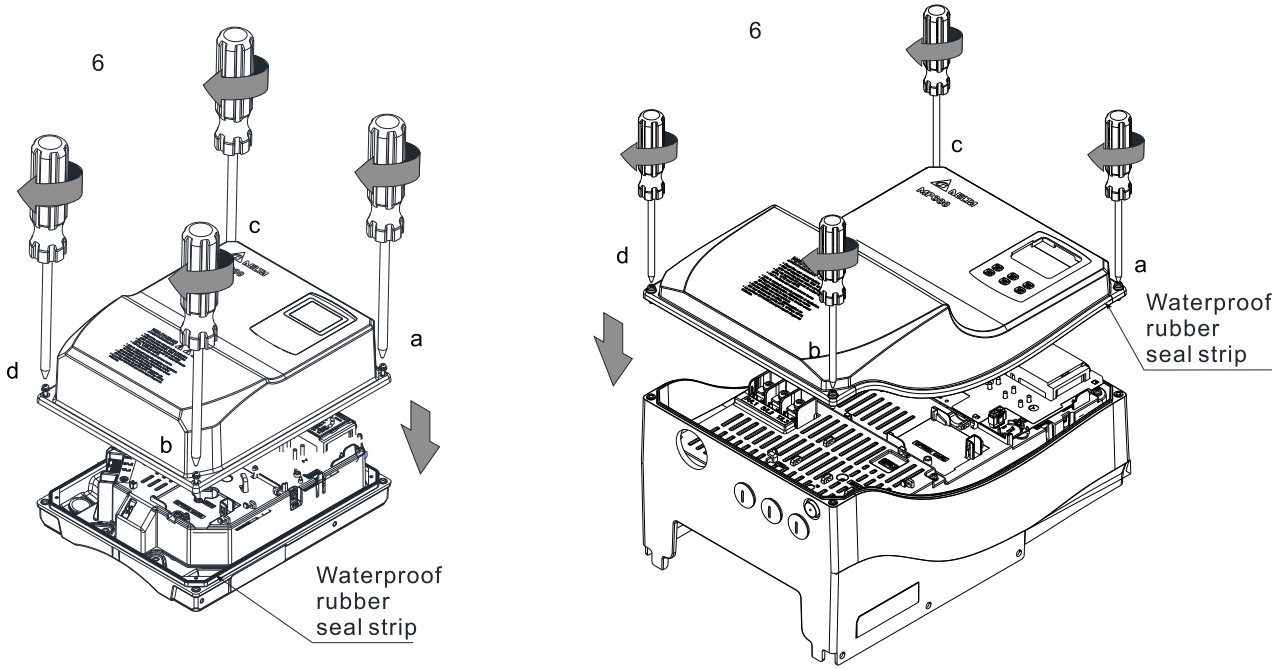

Figure 5-3 Left: frame A, B; Right: frame C

5-1 Main Circuit Diagram

Figure 5-4

Terminals	Descriptions
R/L1, S/L2, T/L3	Mains input terminals (three-phase)
⏚	Ground connection; comply with local regulations.

5-2 Main Circuit Terminal Specifications

- Use the specified ring lug for main circuit terminal wiring. See Figure 5-3 and Figure 5-4 for ring lug specifications. For other types of wiring, use the wires that comply with the local regulations.
- After crimping the wire to the ring lug (must be UL and CSA approved R/C (YDPU2/8)), install heat shrink tubing rated at a minimum of 600 V_{AC} insulation over the live part. Refer to Figure 5-4.
- Main circuit terminal: R/L1, S/L2, T/L3

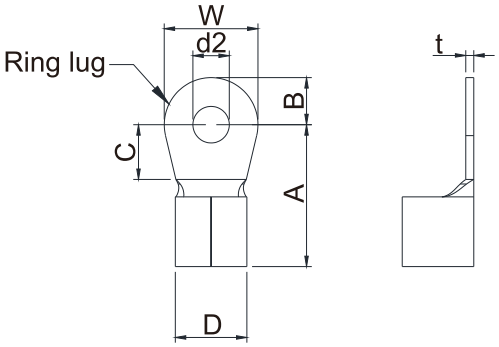

Figure 5-5

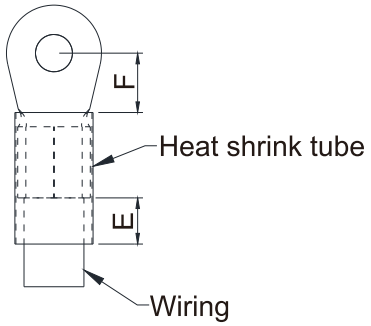

Figure 5-6

- Dimensions of Ring Lug

The part # of the ring lugs (produced by K.S. Terminals Inc.) in the table below are for reference only. You can buy other ring lugs of your choice to match with different frame sizes.

Unit: mm

Frame	AWG*1	Model Name	A (MAX)	B (MAX)	C (MIN)	D (MAX)	d2 (MIN)	E (MIN)	F (MIN)	W (MAX)	t (MAX)
A	22	RNBS 1-4	12.1	3.6	6.1	5.6	4.3	13.00	4.5	7.2	1.0
	18	RNBS 1-4									
	16	RNBS 1-4									
	14	RNBS 2-4									
	12	RNBS 5-4									
B	12	RNBS 5-4									
	10	RNBS 5-4									
C	8	RNBL 8-6	28.0	9.0	13.5	14.0	6.4	13.0	12.0	16.5	1.7
	6	RNBL 14-6									
	4	RNBL 22-6									

*1: Refer to the following tables for the wire size specification for models in each frame.

Frame A

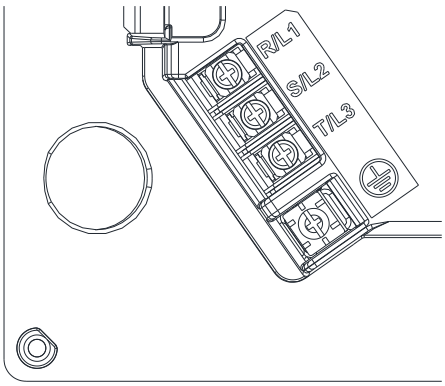

- If the installation is in an environment where the ambient temperature is above 40°C, use copper wire with a rated voltage of 600V and a temperature resistance of 90°C or above for wiring.
- To be UL installation compliant, you must use copper wires when installing. The wire gauge is based on a temperature resistance of 75°C, in accordance with UL requirements and recommendations. Do not reduce the wire gauge when using high-temperature resistant wires.

Model	Main Circuit Terminals R/L1, S/L2, T/L3			Terminal ⏚		
	Maximum Wire Gauge	Minimum Wire Gauge	Torque (±10%)	Maximum Wire Gauge	Minimum Wire Gauge	Torque (±10%)
VFD1A6MP43JNNAA, VFD1A6MP43JFNAA	4 mm^2 (12 AWG)	0.5 mm^2 (22 AWG)	#6-32 UNC 8 kgf-cm (7.0 lb-in.) (0.78 Nm)	2.5 mm^2 (14 AWG)	2.5 mm^2 (14 AWG)	M4 8 kgf-cm (7.0 lb-in.) (0.78 Nm)
VFD3A3MP43JNNAA VFD3A3MP43JFNAA		0.75 mm^2 (18 AWG)		2.5 mm^2 (14 AWG)	2.5 mm^2 (14 AWG)	
VFD4A7MP43JNNAA, VFD4A7MP43JFNAA		1.5 mm^2 (16 AWG)		2.5 mm^2 (14 AWG)	2.5 mm^2 (14 AWG)	
VFD6A2MP43JNNAA, VFD6A2MP43JFNAA		2.5 mm^2 (14 AWG)		2.5 mm^2 (14 AWG)	2.5 mm^2 (14 AWG)	
VFD8A5MP43JNNAA, VFD8A5MP43JFNAA		2.5 mm^2 (14 AWG)		2.5 mm^2 (14 AWG)	2.5 mm^2 (14 AWG)	
VFD11AMP43JNNAA		4 mm^2 (12 AWG)		4 mm^2 (12 AWG)	4 mm^2 (12 AWG)	

Frame B

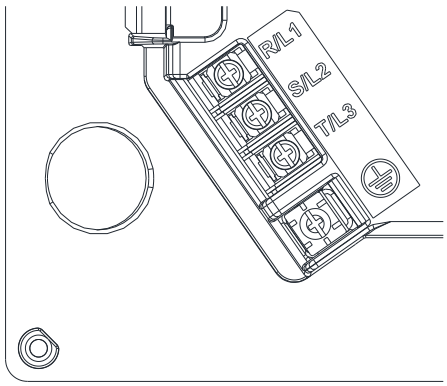

- If the installation is in an environment where the ambient temperature is above 40°C, use copper wire with a rated voltage of 600V and a temperature resistance of 90°C or above for wiring.
- To be UL installation compliant, you must use copper wires when installing. The wire gauge is based on a temperature resistance of 75°C, in accordance with UL requirements and recommendations. Do not reduce the wire gauge when using high-temperature resistant wires.

Model	Main Circuit Terminals R/L1, S/L2, T/L3			Terminal ⏚		
	Maximum Wire Gauge	Minimum Wire Gauge	Torque (±10%)	Maximum Wire Gauge	Minimum Wire Gauge	Torque (±10%)
VFD11AMP43JFNAA	6 mm^2 (10 AWG)	4 mm^2 (12 AWG)	#6-32 UNC 8 kgf-cm (7.0 lb-in.) (0.78 Nm)	4 mm^2 (12 AWG)	4 mm^2 (12 AWG)	M4 8 kgf-cm (7.0 lb-in.) (0.78 Nm)
VFD15AMP43JNNAA VFD15AMP43JFNAA		6 mm^2 (10 AWG)		6 mm^2 (10 AWG)	6 mm^2 (10 AWG)	

Frame C

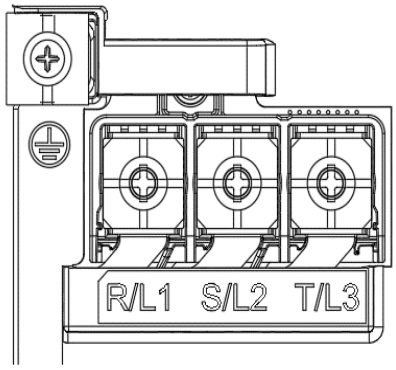

- If the installation is in an environment where the ambient temperature is above 40°C, use copper wire with a rated voltage of 600V and a temperature resistance of 90°C or above for wiring.
- To be UL installation compliant, you must use copper wires when installing. The wire gauge is based on a temperature resistance of 75°C, in accordance with UL requirements and recommendations. Do not reduce the wire gauge when using high-temperature resistant wires.

Model	Main Circuit Terminals R/L1, S/L2, T/L3			Terminal ⏚		
	Maximum Wire Gauge	Minimum Wire Gauge	Torque (±10%)	Maximum Wire Gauge	Minimum Wire Gauge	Torque (±10%)
VFD24AMP43JNNAA	25 mm^2 (4 AWG)	10 mm^2 (8 AWG)	M6 51 kgf-cm (44.2 lb-in.) (5.0 N-m)	10 mm^2 (8 AWG)	10 mm^2 (8 AWG)	M6 51 kgf-cm (44.2 lb-in.) (5.0 N-m)
VFD24AMP43JFNAA		10 mm^2 (8 AWG)		10 mm^2 (8 AWG)	10 mm^2 (8 AWG)	
VFD31AMP43JNNAA		10 mm^2 (8 AWG)		10 mm^2 (8 AWG)	10 mm^2 (8 AWG)	
VFD31AMP43JFNAA		10 mm^2 (8 AWG)		10 mm^2 (8 AWG)	10 mm^2 (8 AWG)	
VFD39AMP43JNNAA		16 mm^2 (6 AWG)		16 mm^2 (6 AWG)	16 mm^2 (6 AWG)	
VFD39AMP43JFNAA		16 mm^2 (6 AWG)		16 mm^2 (6 AWG)	16 mm^2 (6 AWG)	
VFD45AMP43JNNAA		25 mm^2 (4 AWG)		25 mm^2 (4 AWG)	16 mm^2 (6 AWG)	
VFD45AMP43JFNAA		25 mm^2 (4 AWG)		25 mm^2 (4 AWG)	16 mm^2 (6 AWG)	

Chapter 6 Control Terminals

6-1 Control Terminals

CAUTION

Analog input terminals (AI1–2, ACM)

☑ Analog input signals are easily affected by external noise. Use shielded wiring and keep it as short as possible (less than 20 m) with proper grounding. If the noise is inductive, connecting the shield to the ACM terminal can reduce interference.

☑ Use twisted-pair wire for weak analog signals.

☑ If the analog input signals are affected by noise from the AC motor drive, connect a capacitor and a ferrite core as shown the figure below.

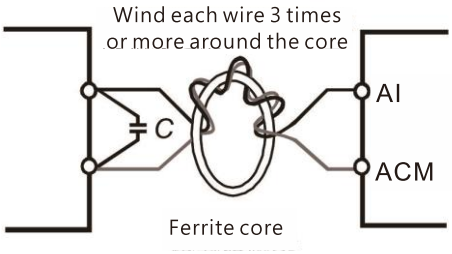

Contact input terminals (MI1–MI4, DCM, +24 V)

① Sink Mode
with internal power (+24 V_{DC})

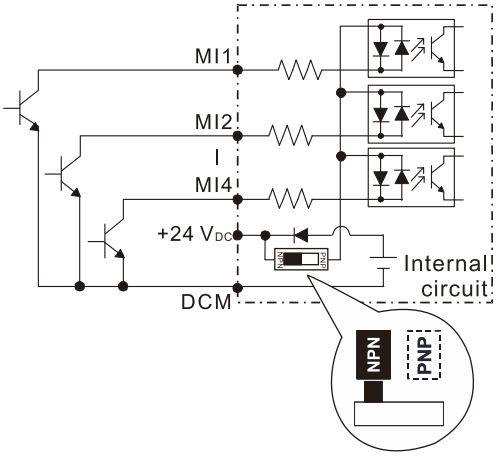

② Source Mode
with internal power (+24 V_{DC})

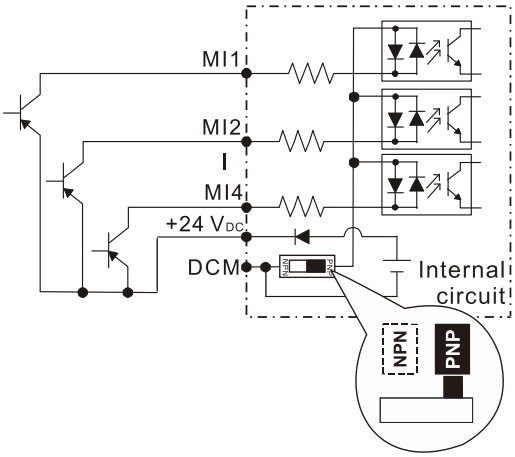

③ Sink Mode
with external power

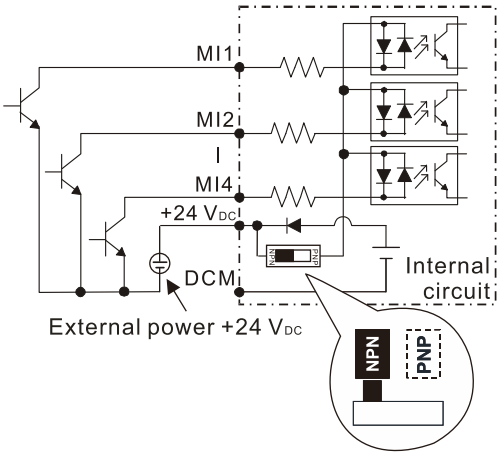

④ Source Mode
with external power

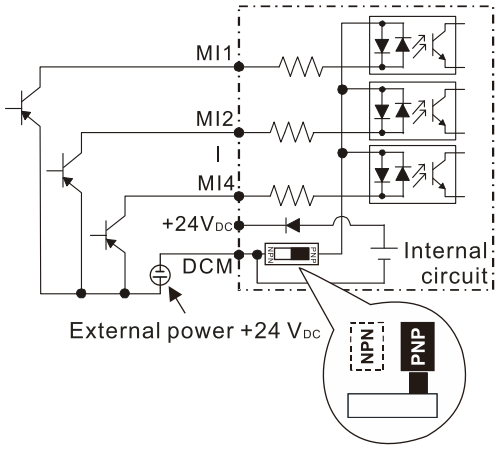

☑ When using internal power, the terminal switches to NPN is collinear with 24V, and switches to PNP is collinear with DCM.

☑ It’s Sink mode when the external transistor is NPN, and it's Source mode when the

	external transistor is PNP. Transistor (digital) output terminals (MO, MCM) ☑ Connect the digital outputs to the correct polarity. ☑ When connecting a relay to the digital outputs, connect a surge absorber across the coil and check the polarity.

6-1 Control Terminals

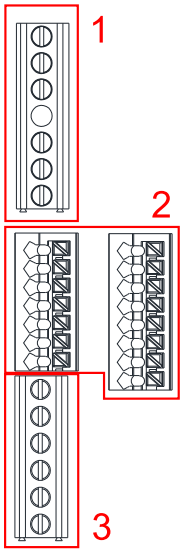

Control Terminal Distribution Diagram

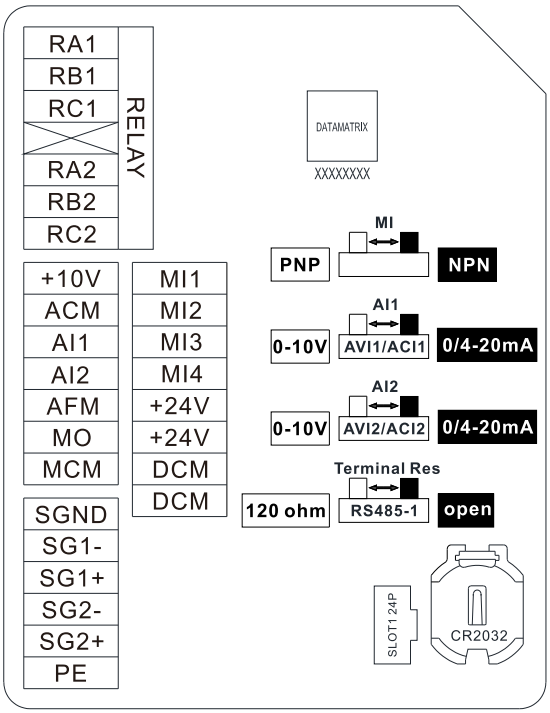

Control Terminal Location Diagram

Wiring precautions:

- The RELAY terminal uses the PCB terminal block (as shown in Area 1 in the control terminal distribution diagram):
  - Tighten the wiring with a 2.5 mm width and 0.4 mm thickness slotted screwdriver.
  - The ideal length of stripped wire at the connection side is 9–10 mm.
  - When wiring bare wires, ensure that they are perfectly arranged to go through the wiring holes.
- The control terminal uses the push-in spring terminal block (as shown in Area 2 in the control terminal distribution diagram):
  - When removing wires, use the slotted screwdriver to press down the terminal, and the suggested force is 1.5 kgf.
    Slotted screwdriver: 2.5 mm width and 0.4 mm thickness
  - The ideal length of stripped wire at the connection side is 9 mm.
  - When wiring bare wires, ensure that they are perfectly arranged to go through the wiring holes.
- The RS-485 terminal uses the PCB terminal block (as shown in Area 3 in the control terminal distribution diagram):
  - Tighten the wiring with a 2.5 mm width and 0.4 mm thickness slotted screwdriver.
  - The ideal length of stripped wire at the connection side is 9 mm.
  - When wiring bare wires, ensure that they are perfectly arranged to go through the wiring holes.

Wiring Specifications of Terminals

Name	Wiring Specifications of Control Terminals	Stripping Length (mm)	Maximum Wire Gauge	Minimum Wire Gauge	Torque (±10%)
RELAY Terminals	Solid	9	1.5mm² 16AWG	0.2mm² 24AWG	5 kgf-cm [4.3 lb-in.] [0.49 Nm]
	Strand				
RS-485 terminal	Solid				
	Strand				
Control terminal	Solid		0.75mm² 18AWG	0.25mm² 24AWG	
	Strand				
	Stranded with ferrules with plastic sleeve		0.5mm² 20AWG		

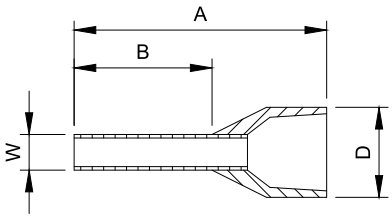

Unit: mm

Suggested models and dimensions for crimping terminals						
Wire Gauge	Manufacturer	Model Name	A (MAX)	B (MAX)	D (MAX)	W (MAX)
0.25mm² 24AWG	PHOENIX CONTACT	AI 0,25- 8 YE	12.5	8	2.6	1.1
0.34mm² 22AWG	PHOENIX CONTACT	AI 0,34- 8 TQ	12.5	8	3.3	1.3
0.5mm² 20AWG	PHOENIX CONTACT	AI 0,5 - 8 WH	14	8	3.5	1.4
Suggested specifications and models for crimping tool: CRIMPFOX 10S - 1212045, Manufacturer: PHOENIX CONTACT DNT13-0101, Manufacturer: DINKLE						

Terminal Name	Terminal function	Descriptions
+24V	Digital control signal common (Source)	+24 VDC ± 10 % 100 mA
MI 1 – MI4	Multi-function Input Selection 1–4	Refer to Pr.02-01–02-04 to program the multi-function inputs Source Mode ON: activation current 3.3 mA, and breakover voltage 11 V_{DC} OFF: cut-off voltage ≤ 5 V_{DC} Sink Mode ON: activation current 3.3 mA, and breakover voltage 13 V_{DC} OFF: cut-off voltage ≥ 19 V_{DC} ● Pr.02-00 = 0 You can set multi-function options with multi-function input terminals MI1, MI2. ● Pr.02-00 ≠ 0 The multi-function input terminals MI1, MI2 work in accordance with the setting values for Pr.02-00.

Terminal Name	Terminal function	Descriptions
MO	Multi-function Output 1 (photo coupler)	The AC motor drive outputs various monitoring signals, such as drive in operation, frequency reached, and overload indication through a transistor. 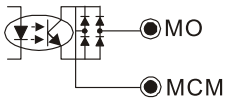 Max. 48 V_{DC} 50 mA
MCM	Multi-function Output Common (photo coupler)	
RA1 RA2	Multi-function output (Relay N.O. a)	Resistive Load 3 A (N.O.) / 3 A (N.C.) 250 V_{AC} 5 A (N.O.) / 3 A (N.C.) 30 V_{DC} Inductive Load (COS 0.4) 1.2 A (N.O.) / 1.2 A (N.C.) 250 V_{AC} 2.0 A (N.O.) / 1.2 A (N.C.) 30 V_{DC} To output different kinds of monitoring signals such as motor drive in operation, frequency reached, and overload indication.
RB1 RB2	Multi-function output (Relay N.C. b)	
RC1 RC2	Multi-function output common (Relay)	
+10V	Potentiometer power supply	Power supply for analog frequency setting: +10.5 ± 0.5 V_{DC} / 20 mA
AI1 AI2	Analog input	The default of AI1 terminal is 0–20 mA current mode. Change to voltage mode by switching J3 of AI1 to 0–10V side, and set Pr.03-28. The default of AI2 terminal is 0–20 mA current mode. Change to voltage mode by switching J3B of AI2 to 0–10V side, and set Pr.03-29. 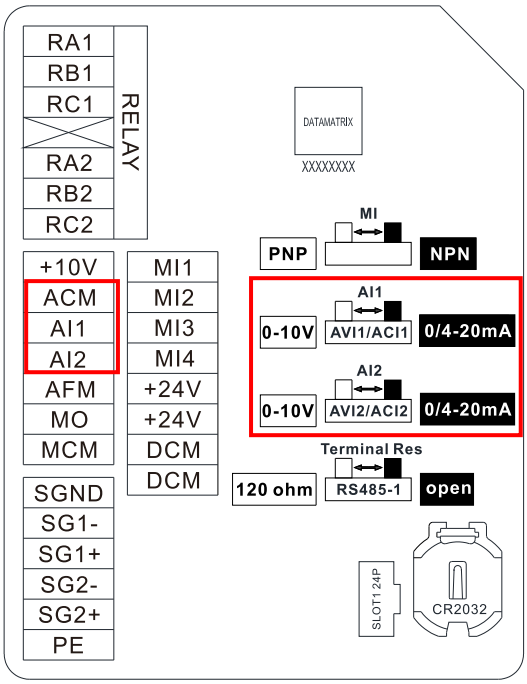

Terminal Name	Terminal function	Descriptions
		Voltage mode (AVI) Analog voltage frequency command Impedance: 20 kΩ Range: 0 – +10 V = corresponding to maximum operation frequency (Pr.01-00) Mode switching by setting Pr.03-00, 03-01, 03-28, 03-29 AVI resolution=12 bits 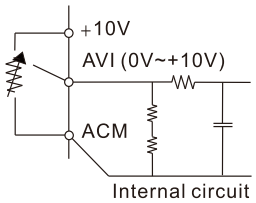 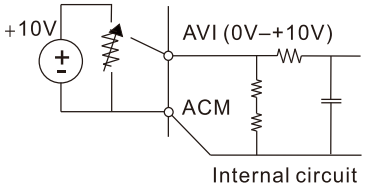 Current mode (ACI) ACI analog current frequency command Impedance: 250 kΩ Range: 0–20 mA / 4–20 mA = corresponding to maximum operation frequency (Pr.01-00) Mode switching by setting Pr.03-00, 03-01, 03-28, 03-29 ACI resolution = 12 bits 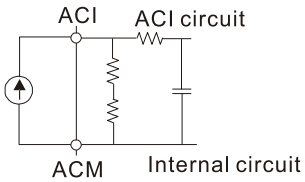
AFM	Multi-function analog voltage output	Range: 0–10 V corresponds to the maximum operating range of the control target Maximum output current: 2 mA, Maximum load: 5 kΩ 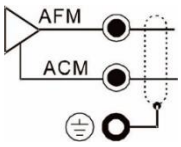
ACM	Analog Signal Common	Analog signal common terminal
PE	Ground function	For the use of grounding the shielding of the communication cable. Since the inner of PE terminal does not connect to system grounding, the system grounding cable and the shielded cable have to connect to PE terminal together.

Terminal Name	Terminal function	Descriptions
SG1- SG1+ SGND	RS-485 communication port (The port to communicate with multi-pump control)	SG1+, SG1-: This is for multi-pump control. The loop includes termination resistor, and switch it by using J5. When it switches to 120 ohm, in the middle of SG1+ and SG1- is in equivalent parallel with 120 ohm resistance. When the cable of multi-pump control is too long, Its reflection wave causes signals to distort. At this moment, J5 of the first and the last drives switch to 120 ohm can decrease the influence. Remember that J5 should be at open side for the drives except the first one and the last one. SG2+, SG2-: to communicate with upper device. SGND: Signal ground of SG1+, SG1-, SG2+, SG2-
SG2- SG2+ SGND	RS-485 communication port (The port to communicate with upper device)	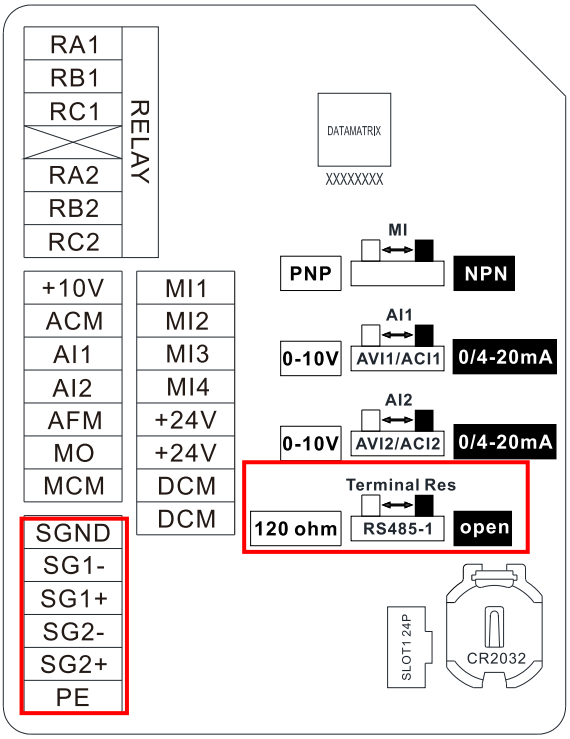 **NOTE:** Refer to Chapter 12 DESCRIPTIONS OF PARAMETER SETTINGS parameter group 09 Communication Parameters for details.

* Analog control signal wiring specification: 0.82 mm^2 [18 AWG] with shielded stranded wire.

[This page intentionally left blank]

Chapter 7 Optional Accessories

7-1 Magnetic Contactor / Air Circuit Breaker and Non-fuse Circuit Breaker

7-2 Fuse Specification Chart

7-3 AC Reactor

7-4 EMC Shield Plate

7-5 Waterproof Connector

7-6 USB / RS-485 Communication Interface IFD6530

7-7 Perpetual Calendar and Battery

7-8 The Adapter Plate for Motor

7-9 Fan and Fan Cord

The optional accessories listed in this chapter are available upon request. Installing additional accessories to your drive substantially improves the drive's performance. Select accessories according to your need or contact your local distributor for suggestions.

7-1 Magnetic Contactor / Air Circuit Breaker and Non-fuse Circuit Breaker

Magnetic Contactor (MC) and Air Circuit Breaker (ACB)

It is recommended the ambient temperature for MC should be ≥ 60°C and that for ACB should be ≥ 50°C. In the meanwhile, consider temperature derating for components with ON / OFF switch in accordance with the ambient temperature of the on-site distribution panel.

Frame	Models	Voltage / Three-phase	Output Current (A)	Input Current (A)	Selection of MC / ACB (A)
A	VFD1A6MP43JNNAA VFD1A6MP43JFNAA	460V three-phase	1.6	1.9	7
	VFD3A3MP43JNNAA VFD3A3MP43JFNAA		3.3	3.8	7
	VFD4A7MP43JNNAA VFD4A7MP43JFNAA		4.7	5.4	9
	VFD6A2MP43JNNAA VFD6A2MP43JFNAA		6.2	7.2	12
	VFD8A5MP43JNNAA VFD8A5MP43JFNAA		8.5	9.9	18
	VFD11AMP43JNNAA		11.7	13.8	32
B	VFD11AMP43JFNAA				
	VFD15AMP43JNNAA VFD15AMP43JFNAA		15.6	18.5	40
C	VFD24AMP43JNNAA VFD24AMP43JFNAA		24.4	29.5	65
	VFD31AMP43JNNAA VFD31AMP43JFNAA		31.8	38.9	85
	VFD39AMP43JNNAA VFD39AMP43JFNAA		39.2	48.5	110
	VFD45AMP43JNNAA VFD45AMP43JFNAA		45.6	56.5	120

Table 7-1

Non-fuse Circuit Breaker

☑ Comply with the UL standard: Per UL 61800, paragraph 6.3.7DV.2.2.1

☑ The rated current of the non-fuse circuit breaker should be 1.6–2.6 times the drive's rated input current. The recommended current values are shown in the table below.

☑ Compare the time characteristics of the non-fuse circuit breaker with those of the drive's overheated protection to ensure that there is no tripping.

Frame	Model	Voltage / Three-phase	Input / output current (the maximum)	Suggested current (A)
A	VFD1A6MP43JNNAA VFD1A6MP43JFNAA	460V three-phase	1.9 / 1.6	5
	VFD3A3MP43JNNAA VFD3A3MP43JFNAA		3.8 / 3.3	10
	VFD4A7MP43JNNAA VFD4A7MP43JFNAA		5.4 / 4.7	15
	VFD6A2MP43JNNAA VFD6A2MP43JFNAA		7.2 / 6.2	20

Frame	Model	Voltage / Three-phase	Input / output current (the maximum)	Suggested current (A)
	VFD8A5MP43JNNAA VFD8A5MP43JFNAA		9.9 / 8.5	25
	VFD11AMP43JNNAA		13.8 / 11.7	32
B	VFD11AMP43JFNAA			
	VFD15AMP43JNNAA VFD15AMP43JFNAA		18.5 / 15.6	40
C	VFD24AMP43JNNAA VFD24AMP43JFNAA		29.5 / 24.4	65
	VFD31AMP43JNNAA VFD31AMP43JFNAA		38.9 / 31.8	85
	VFD39AMP43JNNAA VFD39AMP43JFNAA		48.5 / 39.2	110
	VFD45AMP43JNNAA VFD45AMP43JFNAA		56.5 / 45.6	120

Table 7-2

7-2 Fuse Specification Chart

☑ It's recommended to use the fuses listed below which are tested. Do not use the fuses exceed the fuse specifications. The AC input fuse specifications are lower than the table listed below are allowed. If use the fuse lower than the specifications, ensure its root mean square value of current (Irms) is larger than the actual input current. If use the AC motor drive with 150% output overload capacity, the corresponding input current should be 1.5 times the value in the table.

☑ UL certified fuses apply to the short-circuit protection at the input side. For the installation in the United States, the branch circuit protection must be provided in accordance with the National Electrical Code (NEC) and any applicable local codes. Use UL certified fuses to fulfill this requirement.

☑ For the installation in Canada, branch circuit protection must be provided in accordance with Canadian Electrical Code and any applicable provincial codes. Use UL certified fuses to fulfill this requirement.

Model	Voltage / Three-phase	Input / output current (the maximum)	Branch circuit fuses output [A]
VFD1A6MP43JNNAA VFD1A6MP43JFNAA	460V three-phase	1.9 / 1.6	6.4 Class T JJS-10 600 V_{AC}
VFD3A3MP43JNNAA VFD3A3MP43JFNAA		3.8 / 3.3	13.2 Class T JJS-15 600 V_{AC}
VFD4A7MP43JNNAA VFD4A7MP43JFNAA		5.4 / 4.7	18.8 Class T JJS-20 600 V_{AC}
VFD6A2MP43JNNAA VFD6A2MP43JFNAA		7.2 / 6.2	24.8 Class T JJS-25 600 V_{AC}
VFD8A5MP43JNNAA VFD8A5MP43JFNAA		9.9 / 8.5	34 Class T JJS-35 600 V_{AC}
VFD11AMP43JNNAA VFD11AMP43JFNAA		13.8 / 11.7	46.8 Class T JJS-45 600 V_{AC}
VFD15AMP43JNNAA VFD15AMP43JFNAA		18.5 / 15.6	46.8 Class T JJS-45 600 V_{AC}
VFD24AMP43JNNAA VFD24AMP43JFNAA		29.5 / 24.4	68.3 Class T JJS-60 600 V_{AC}
VFD31AMP43JNNAA VFD31AMP43JFNAA		38.9 / 31.8	89.0 Class T JJS-90 600 V_{AC}
VFD39AMP43JNNAA VFD39AMP43JFNAA		48.5 / 39.2	109.8 Class T JJS-110 600 V_{AC}
VFD45AMP43JNNAA VFD45AMP43JFNAA		56.5 / 45.6	127.7 Class T JJS-125 600 V_{AC}

Table 7-3

7-3 AC Reactor

AC Input Reactor

Install an AC reactor at the input side of an AC motor drive can increase line impedance, improve the power factor, reduce input current, increase system capacity, and reduce interference generated from the motor drive. It also reduces momentary voltage surges or abnormal current spikes from the mains power, further protecting the drive. For example, when the mains power capacity is higher than 500 kVA, or when using a phase-compensation capacitor, momentary voltage and current spikes may damage the AC motor drive's internal circuit. An AC reactor at the input side of the AC motor drive protects it by suppressing surges.

Installation

Install an AC input reactor in series between the mains power and the three input phases R S T, as shown in the figure below:

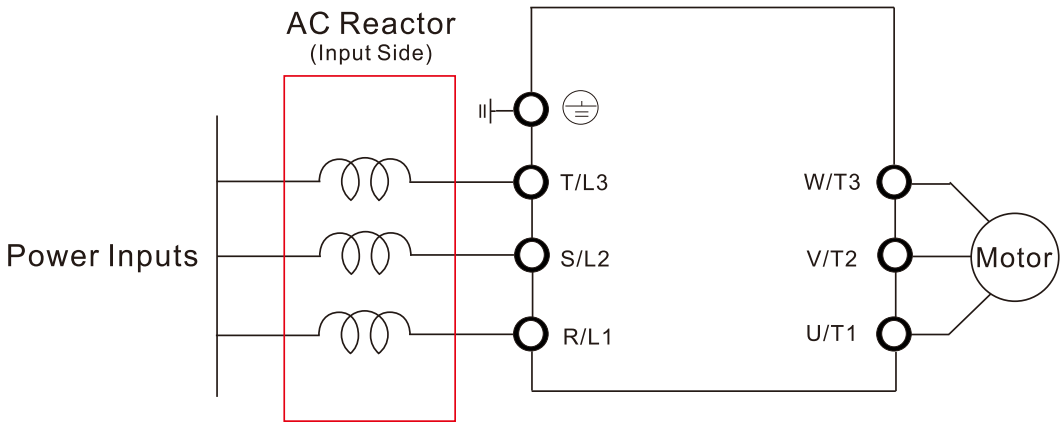

Figure 7-1 AC input reactor installation diagram

The size and the specification of the AC input reactor:

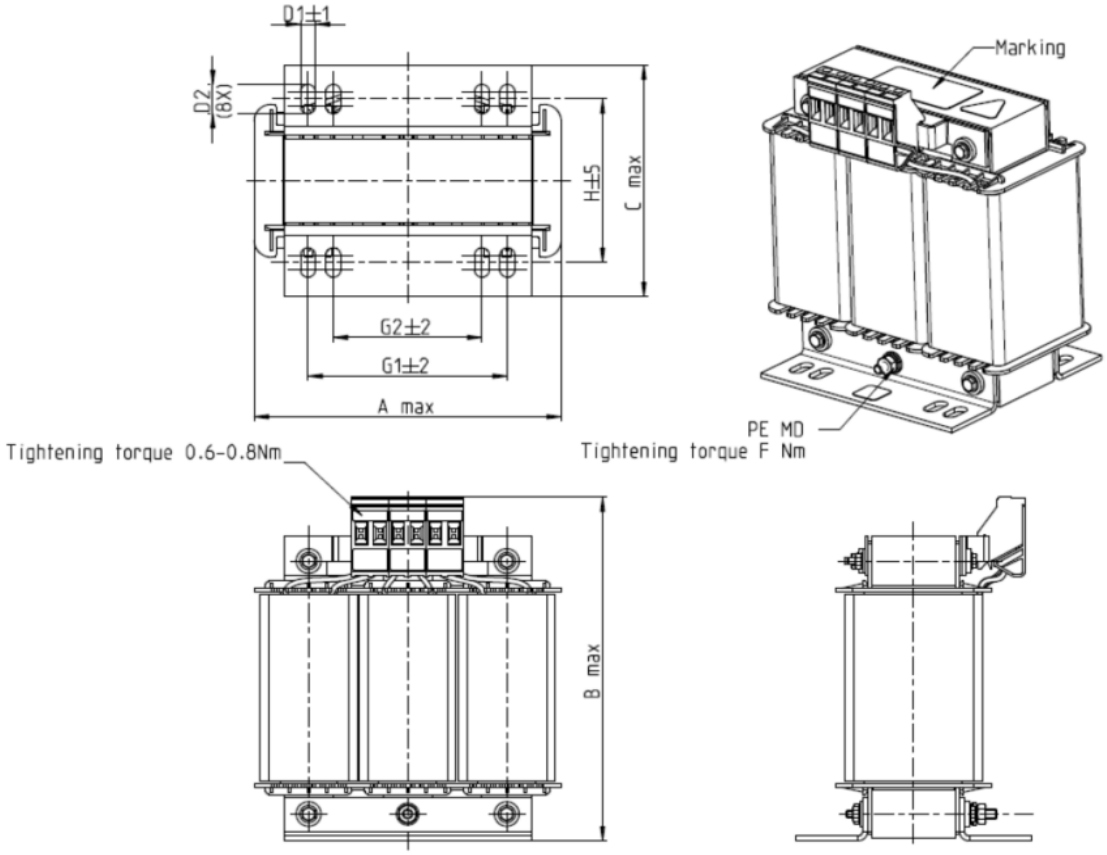

Figure 7-2

Unit: mm

Delta's part no.	A	B	C	D1*D2	E	G1	G2	PE D
DR005A0254	100	115	65	6*9	45	60	40	M4
DR008A0159	100	115	65	6*9	45	60	40	M4
DR011A0115	130	135	95	6*12	60	80.5	60	M4
DR017AP746	130	135	100	6*12	65	80.5	60	M4

Table 7-4

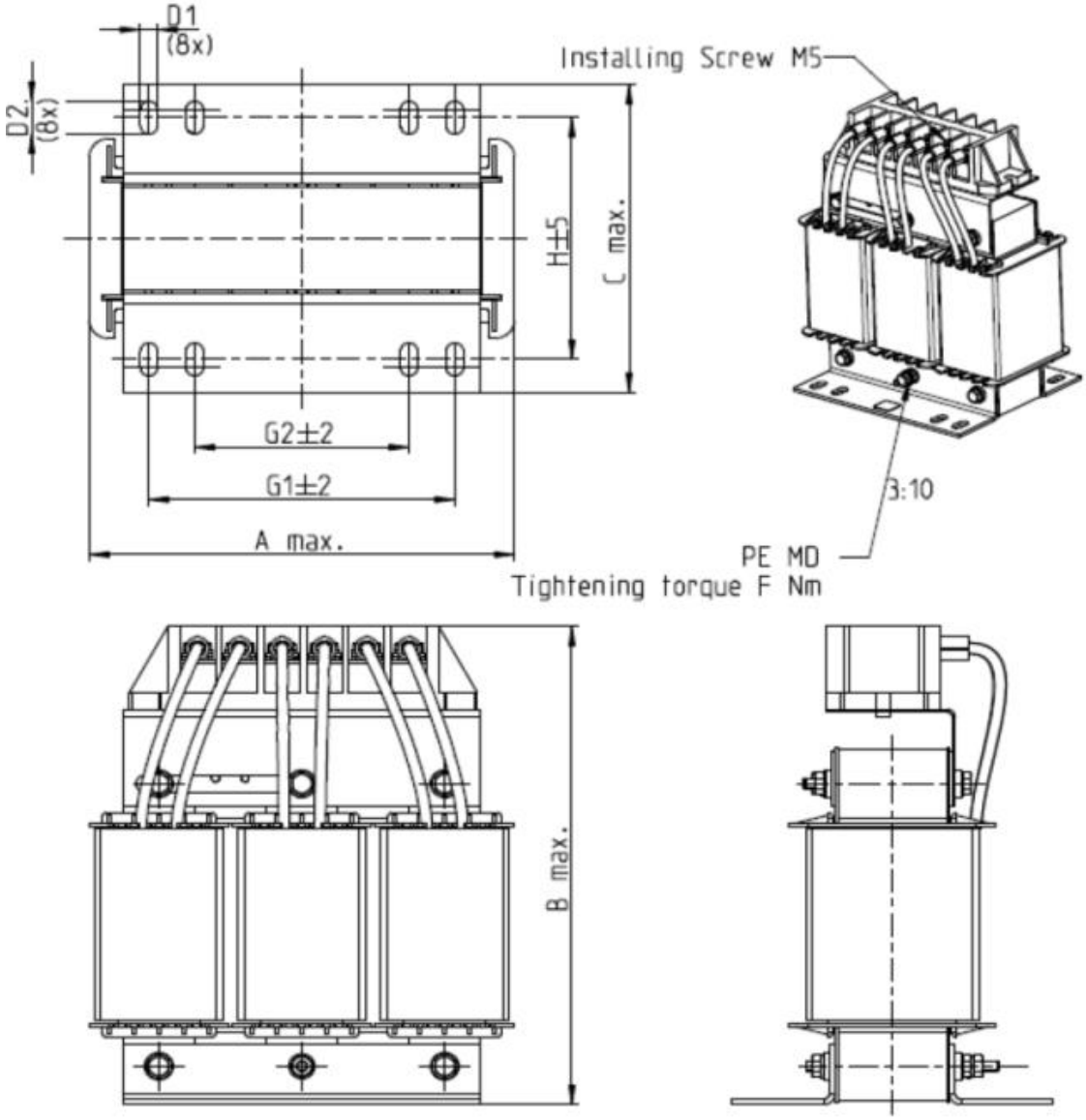

Figure 7-3

Unit: mm

Delta's part no.	A	B	C	D1*D2	H	G1	G2	PE D
DR025AP507	130	195	100	6*12	65	80.5	60	M4

Table 7-5

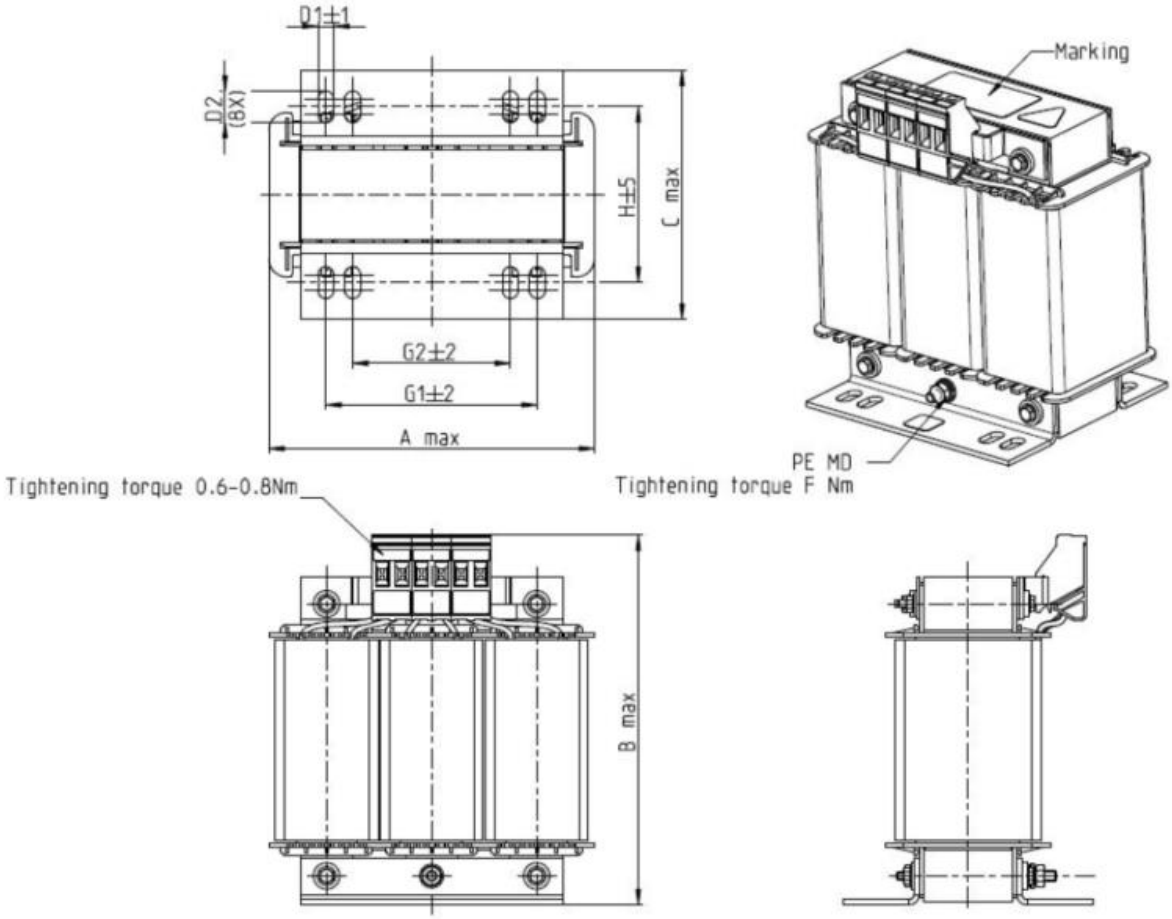

Figure 7-4

Unit: mm

Delta's part no.	A	B	C	D1*D2	H	G1	G2	PE D
DR003A0810	100	125	65	6*9	43	60	40	M4
DR004A0607	100	125	65	6*9	43	60	40	M4
DR006A0405	130	15	95	6*12	60	80.5	60	M4
DR009A0270	160	160	105	6*12	75	107	75	M4
DR010A0231	160	160	115	6*12	90	107	75	M4
DR012A0202	160	160	115	6*12	90	107	75	M4
DR018A0117	160	160	115	6*12	90	107	75	M4

Table 7-6

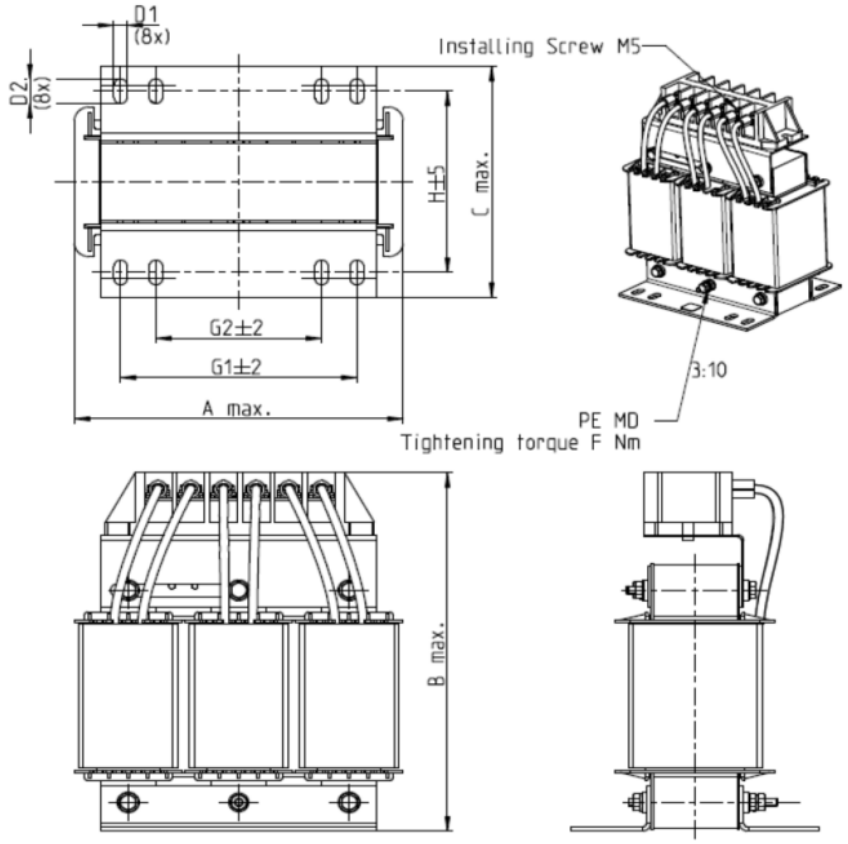

Figure 7-5

Unit: mm

Delta's part no.	A	B	C	D1*D2	H	G1	G2	PE D
DR024AP881	160	175	115	6*12	90	107	75	M4
DR032AP660	195	200	145	6*12	115	122	85	M6
DR038AP639	190	200	145	6*12	115	122	85	M6
DR045AP541	190	200	145	6*12	115	122	85	M6

Table 7-7

The specification of the AC input reactor

460V, 50-60 Hz / three-phase

Model	Rated Current (Arms)	Saturation Current (Arms)	Recommended selection		
			AC input reactor (mH)	Delta's part no.	Weight (kg)
VFD1A6MP43JNNAA VFD1A6MP43JFNAA	1.6	2.4	8.102	DR003A0810	1.5
VFD3A3MP43JNNAA VFD3A3MP43JFNAA	3.3	4.95	6.077	DR004A0607	1.8
VFD4A7MP43JNNAA VFD4A7MP43JFNAA	4.7	7.05	4.05	DR006A0405	2.8
VFD6A2MP43JNNAA VFD6A2MP43JFNAA	6.2	9.3	2.7	DR009A0270	3.5
VFD8A5MP43JNNAA VFD8A5MP43JFNAA	8.5	12.75	2.7	DR009A0270	3.5
VFD11AMP43JNNAA VFD11AMP43JFNAA	11.7	17.55	2.315	DR010A0231	4.5
VFD15AMP43JNNAA VFD15AMP43JFNAA	15.6	23.4	1.174	DR018A0117	5.3
VFD24AMP43JNNAA VFD24AMP43JFNAA	24.4	36.6	0.881	DR024AP881	5.8
VFD31AMP43JNNAA VFD31AMP43JFNAA	31.8	47.7	0.66	DR032AP660	9
VFD39AMP43JNNAA VFD39AMP43JFNAA	39.2	58.8	0.639	DR038AP639	9.5
VFD45AMP43JNNAA VFD45AMP43JFNAA	45.6	68.4	0.541	DR045AP541	10.5

Table 7-8

The table below shows the THDi specification when using Delta's drives to work with AC/DC reactors.

Drive Spec.	Models without Built-in DC Reactors			
Reactor Spec.	No AC/DC Reactor	3% Input AC Reactor	5% Input AC Reactor	4% DC Reactor
5th	73.3%	38.5%	30.8%	34.4%
7th	52.74%	15.3%	9.4%	18.6%
11th	7.28%	7.1%	6.13%	7.14%
13th	0.4%	3.75%	3.15%	3.41%
THDi	91%	43.6%	34.33%	38.2%
NOTE	The THDi specification listed here assumes that there is 0.8% resistance (mains electricity) before the reactors and may be slightly different from the actual THDi, depending on the installation and environmental conditions (wires, motors).			

Table 7-9

7-4 EMC Shield Plate

EMC Shield Plate (for use with shielded cable)

Frame	Model of EMC shield plate	Reference figure
A, B	MKMP-EPB	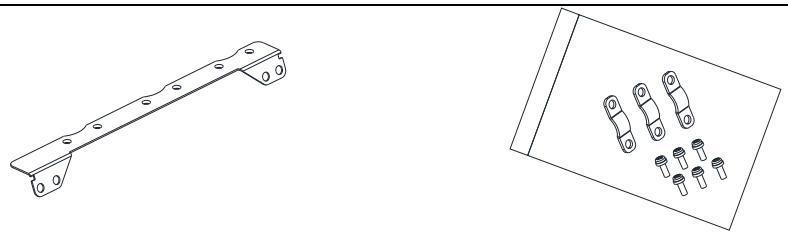 Figure 7-6
C	MKMP-EPC	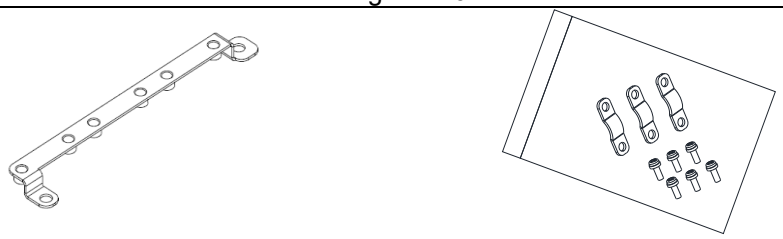 Figure 7-7

Table 7-10

The appearance and the size

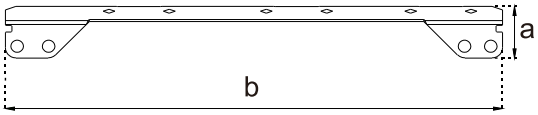

Figure 7-8

Frame	The size of EMC shield plate mm [inch]	
	a	b
A, B	19.8 [0.78]	189.5 [7.46]
C	20.1 [0.79]	115.4 [4.54]

Table 7-11

Installation

MKMP-EPB (This example uses frame A model)

1. As shown in the right figure, fix the shield plate on the AC motor drive.

Screw	Torque
M4	6–8 kgf-cm [5.2–6.9 lb-in.] [0.59–0.78 Nm]

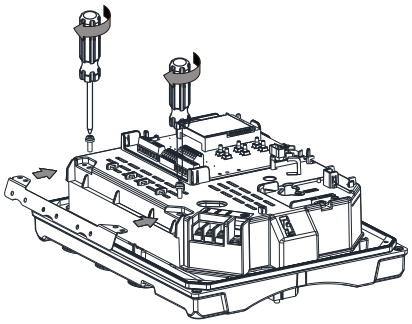

Figure 7-9

2. Select a suitable metal omega clip according to the wire gauge used, and then fix the metal omega clip on the shield plate.

Screw	Torque
M4	6–8 kgf-cm [5.2–6.9 lb-in.] [0.59–0.78 Nm]

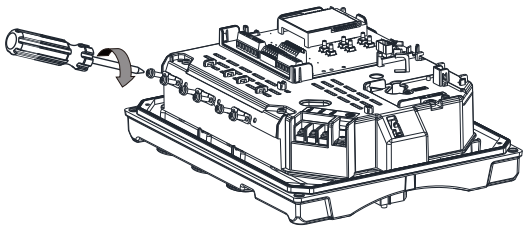

Figure 7-10

MKMP-EPC

1. As shown in the right figure, fix the shield plate on the AC motor drive.

Screw	Torque
M4	6~8 kgf-cm [5.2~6.9 lb-in.] [0.59~0.78 Nm]

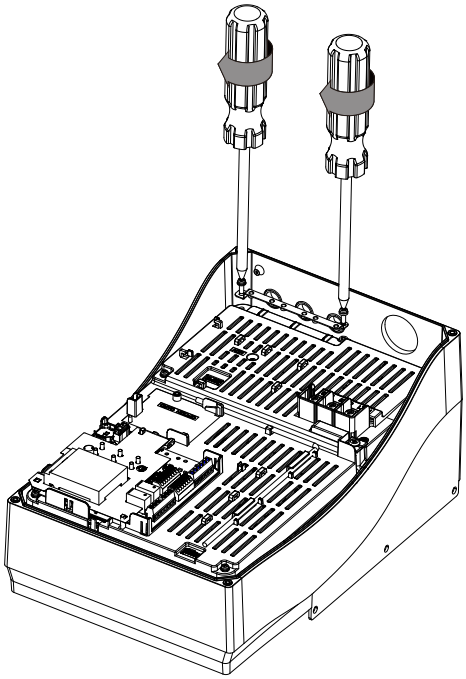

Figure 7-11

2. Select a suitable metal omega clip according to the wire gauge used, and then fix the metal omega clip on the shield plate.

Screw	Torque
M4	6~8 kgf-cm [5.2~6.9 lb-in.] [0.59~0.78 Nm]

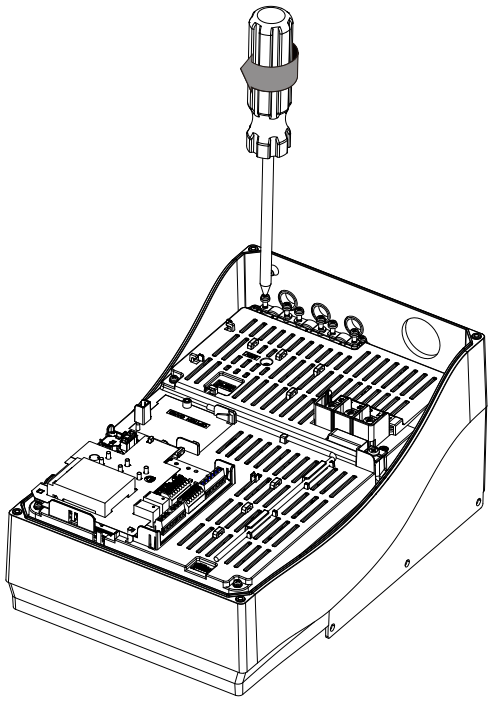

Figure 7-12

7-5 Waterproof Connector

Waterproof connector (for wiring)

Frame	Models	Reference figure
A, B	MKMP-CG20 MKMP-CG25	 Figure 7-13
C	MKMP-CG20 MKMP-CG40	

Table 7-12

The appearance and the size

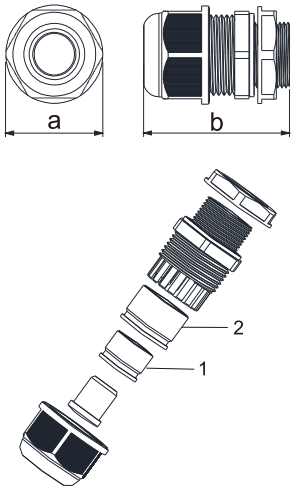

Figure 7-14

Models	The suitable wire gauge mm [inch]		The size of the waterproof connector mm [inch]	
	1	2	a	b
MKMP-CG20	5.5 [0.22] – 9.0 [0.35]	9.0 [0.35] – 14.4 [0.57]	30.5 [1.20]	49.3 [1.94]
MKMP-CG25	10.5 [0.41] – 14.1 [0.56]	14.1 [0.56] – 18.8 [0.74]	37.0 [1.46]	55.0 [2.17]
MKMP-CG40	17.8 [0.7] – 23.7 [0.93]	23.7 [0.93] – 32.3 [1.27]	58.5 [2.3]	61.0 [2.4]

Table 7-13

Suggested torque value to install

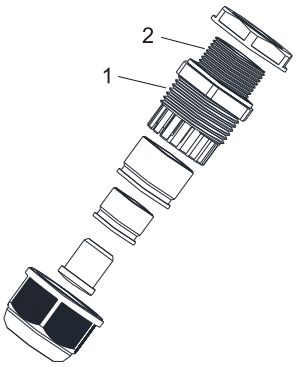

Figure 7-15

Models	1		2
	The suitable wire gauge mm [inch]	The suggested torque value kgf-cm [lb-in.] [Nm]	The suggested torque value kgf-cm [lb-in.] [Nm]
MKMP-CG20	5.5 [0.22] – 9 [0.35]	20–30 kgf-cm [17.3–26.0 lb-in.] [1.97–2.95 Nm]	20–25 kgf-cm [17.3–21.7 lb-in.] [1.97–2.46 Nm]
	9 [0.35] – 14.4 [0.57]	25–30 kgf-cm [21.7–26.0 lb-in.] [2.46–2.95 Nm]	
MKMP-CG25	10.5 [0.41] – 14.1 [0.56]	30–35 kgf-cm [26.0–30.3 lb-in.] [2.95–3.44 Nm]	28–35 kgf-cm [24.3–30.3 lb-in.] [2.75–3.44 Nm]
	14.1 [0.56] – 18.8 [0.74]	25–45 kgf-cm [21.7–39.0 lb-in.] [2.46–4.42Nm]	
MKMP-CG40	17.8 [0.7] – 23.7 [0.93]	54–70 kgf-cm [46.9–60.8lb-in.] [5.30–6.86Nm]	75–80 kgf-cm [65.1–69.4lb-in.] [7.35–7.85Nm]
	23.7 [0.93] – 32.3 [1.27]	58–88 kgf-cm [50.4–76.4lb-in.] [5.69–8.63Nm]	

Table 7-14

Installation

1. As the figure shown below, remove the waterproof connector nuts and the vent plugs.

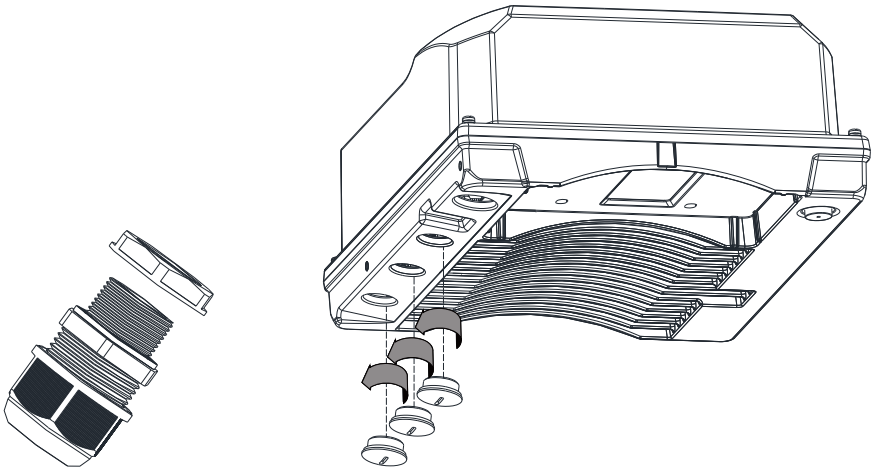

Figure 7-16 Frame A / B

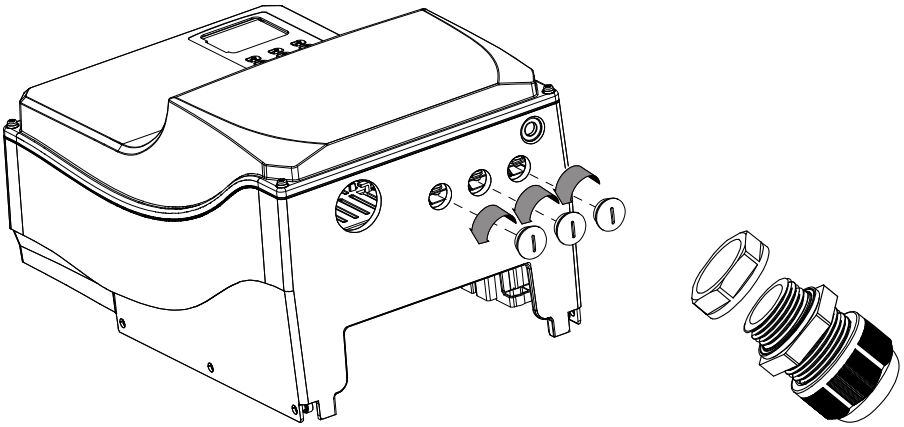

Figure 7-17 Frame C

2. Choose the waterproof connector which is suitable to the heat sink screw thread according to the outgoing cable position. And screw the waterproof connector to the AC motor drive according to the suggested torque value.
   Note: Refer to Chapter 2 Dimensions for more details about the specification of the heat sink screw thread.

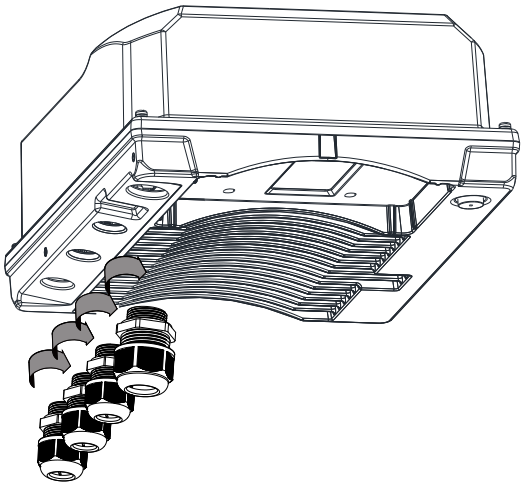

Figure 7-18 Frame A / B

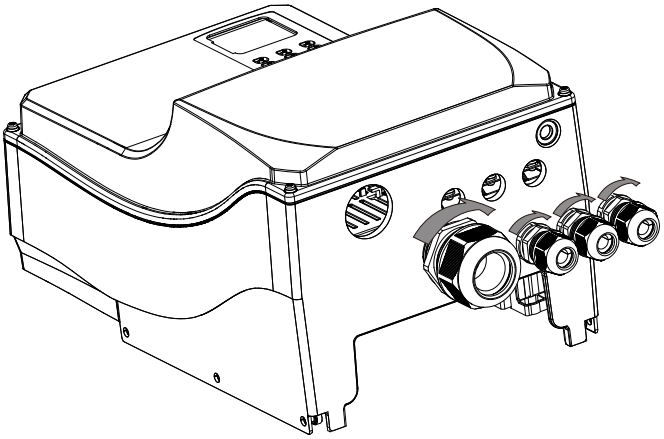

Figure 7-19 Frame C

7-6 USB / RS-485 Communication Interface IFD6530

☑ Please thoroughly read this instruction sheet before installing and putting it into use.

☑ The content of this instruction sheet and the driver file may be revised without prior notice. Please consult our distributors or download the most updated instruction / driver version on Delta's download center.

Introduction

IFD6530 is a convenient RS485-to-USB converter, which does not require external power supply and complex setting process. It supports the transmission speed from 75 to 115 Kbps and auto switching direction of data transmission. In addition, it adopts RJ-45 in RS485 connector for users to wire conveniently. And its tiny dimension, handy use of plug-and-play and hot-swap provide more conveniences for connecting all Delta industrial automation products to your PC.

Applicable models: all Delta's industrial automation products.

Product application and the appearance

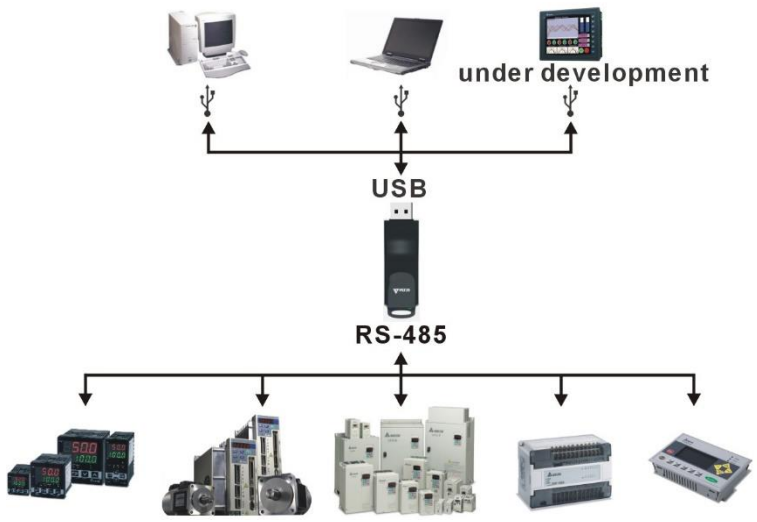

Figure 7-20

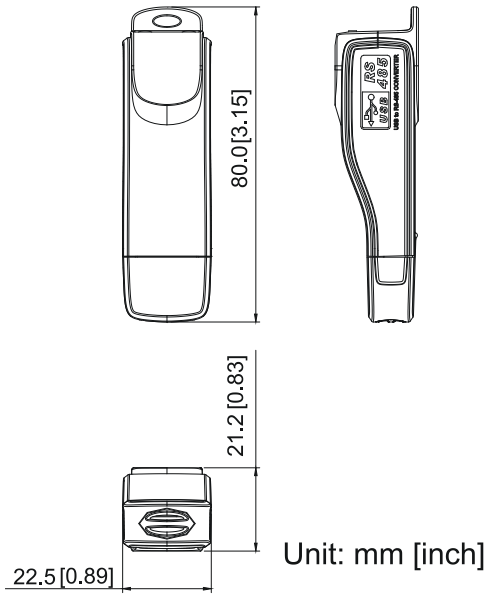

Figure 7-21

Specifications

Power supply	No external power is needed
Power consumption	0.4 W
Isolated voltage	2,500 V_{DC}
Transmission speed	75 Kbps, 150 Kbps, 300 Kbps, 600 Kbps, 1,200 Kbps, 2,400 Kbps, 4,800 Kbps, 9,600 Kbps, 19,200 Kbps, 38,400 Kbps, 57,600 Kbps, 115,200 Kbps
RS-485 connector	RJ45
USB connector	A type (plug)
Compatibility	In compliance with USB V2.0 specification
The maximum cable length	RS-485 communication port: 100 m
Supports RS-485 half-duplex transmission	

Table 7-15

RJ45

→

PIN	Description
1	Reserved
2	Reserved
3	Reserved
4	SG-

PIN	Description
5	SG+
6	Reserved
7	Reserved
8	Reserved

The accessory pack includes one cable, one side is RJ11 which connects with IFD6500, another side is two bare wires which are SG1+ (red) and SG1- (green) that can connect to two sets of communication ports on the control board of MP300.

- If you select the first set of RS-485 communication port, then lock the red bare wire to SG1+, and lock the green bare wire to SG1-.
- If you select the second set of RS-485 communication port, then lock the red bare wire to SG2+, and lock the green bare wire to SG2-.

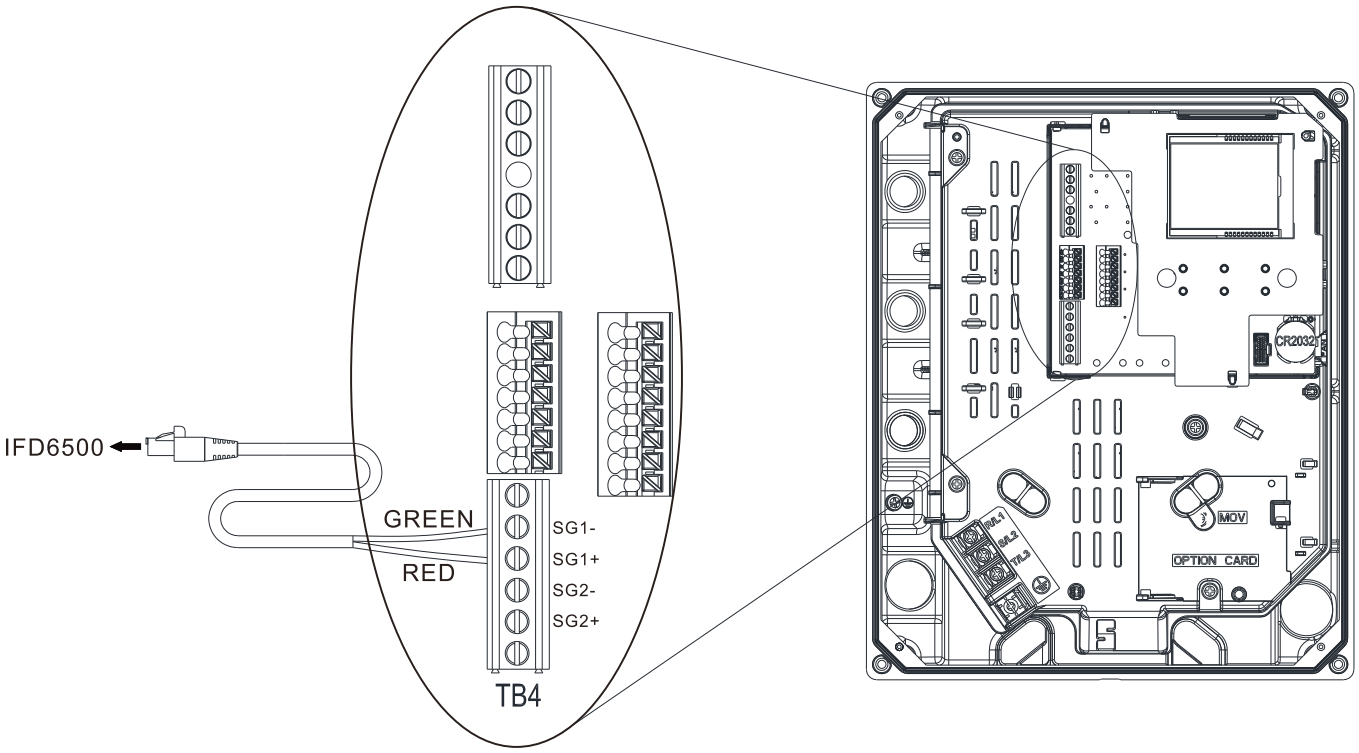

Figure 7-22

Preparations before the driver installation

Extract the driver file (IFD6500_Drivers.exe) by the following steps.

NOTE: Do not connect IFD6530 to PC before extracting the driver file.

STEP 1

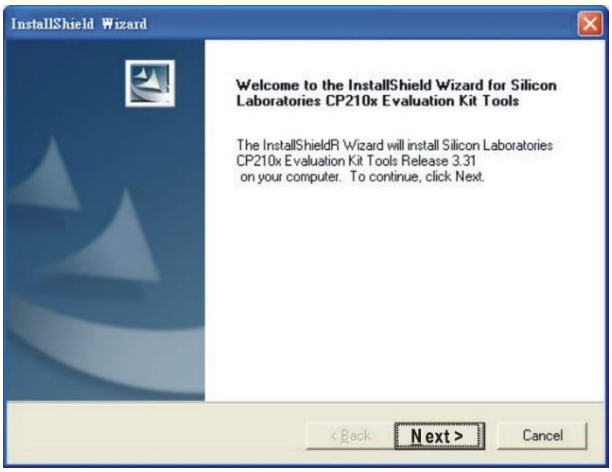

STEP 2

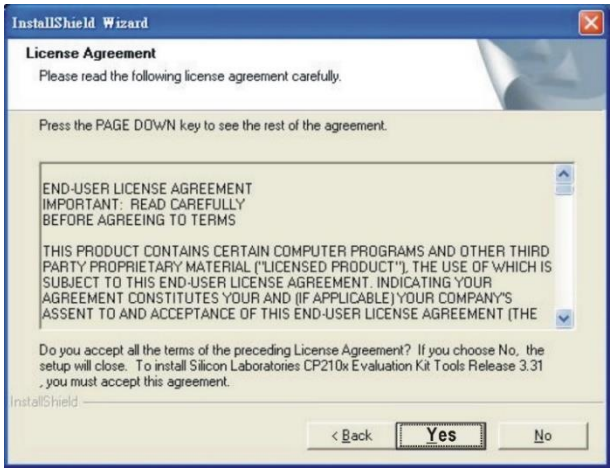

STEP 3

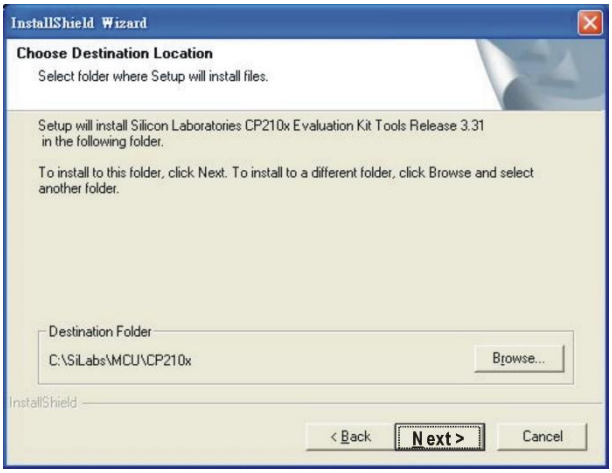

STEP 4

STEP 5

IFD6500 driver file is stored in a folder marked SiLabs under drive C. (c:\ SiLabs)

Driver installation

After connecting IFD6530 to PC, install the driver by the following steps.

STEP 1

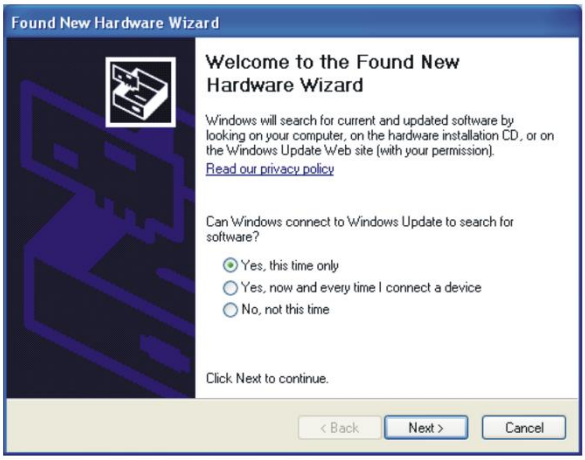

STEP 2

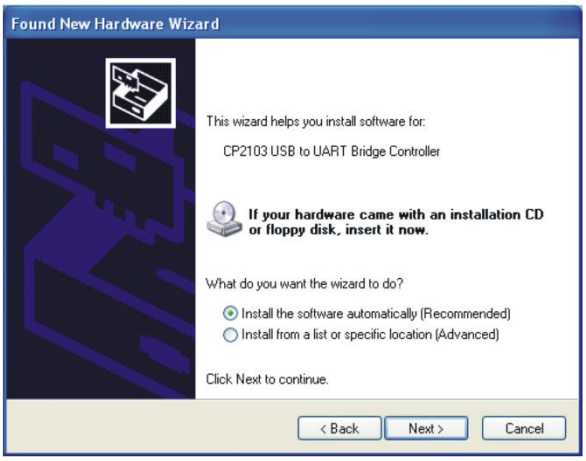

OR

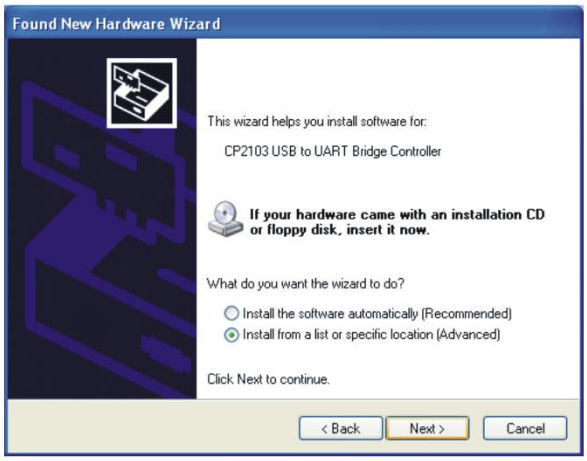

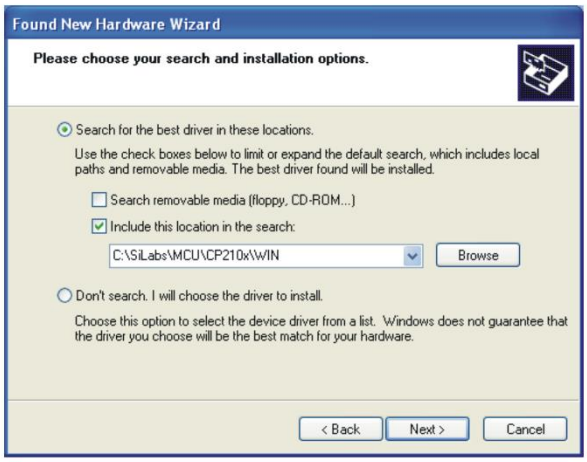

Browse and select directory, or enter C:\SiLabs\MCU\CP210x\WIN

STEP 3

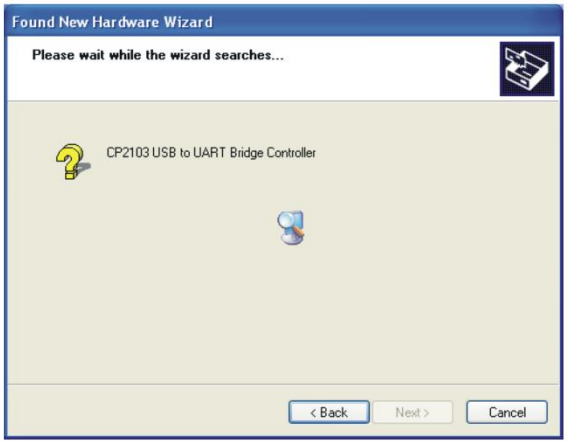

STEP 4

STEP 5
Repeat Step 1 to Step 4 to complete COM PORT setting.

LED display

1. Steady green LED: the power is ON.
2. Blinking orange LED: the data is transmitting.

7-7 Perpetual Calendar and Battery

☑ The perpetual calendar function has to install the battery CR2032 (this battery is common specification). Follow the figure shown below to install the battery.

☑ When the battery voltage is insufficient, the panel shows LBAt (Low battery voltage) to remind user to change the battery.

☑ This product doesn't ship with any battery and we don't sell any battery. Please purchase the battery for this product by yourself.

Install and remove

1. Install: Press the battery into the battery slot, and confirm the battery is securely latched. The installation is finished.
2. Remove: When change the battery, use a slotted screwdriver to press the latch to release the battery.

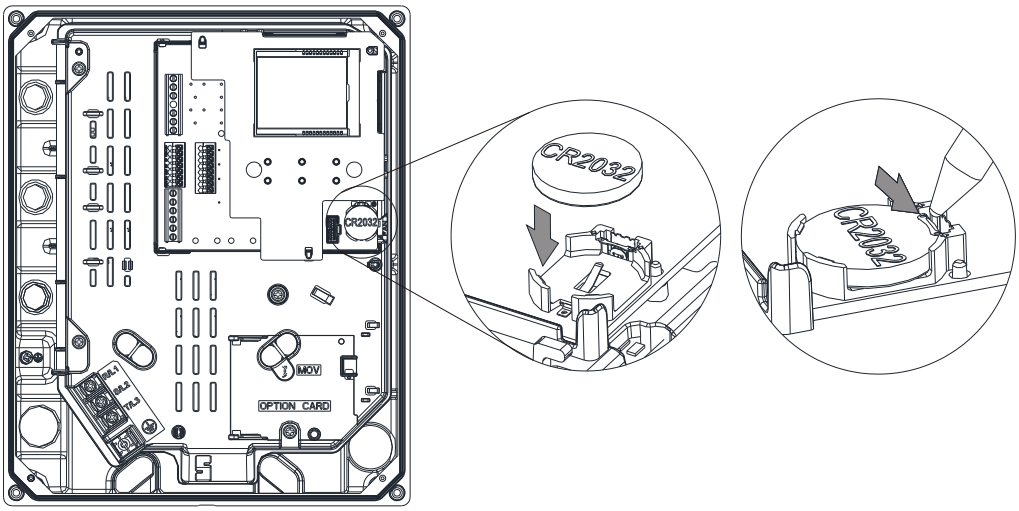

Figure 7-23

7-8 The Adapter Plate for Motor

Use this adapter plate to connect MP300 and motor. The bottom surface of the adapter plate is flat, suitable for motors where the mounting hole of the motor fixing holder is the highest point. If there are internal structures in the motor fixing holder that protrude the mounting surface, it will affect installation. See the instruction below.

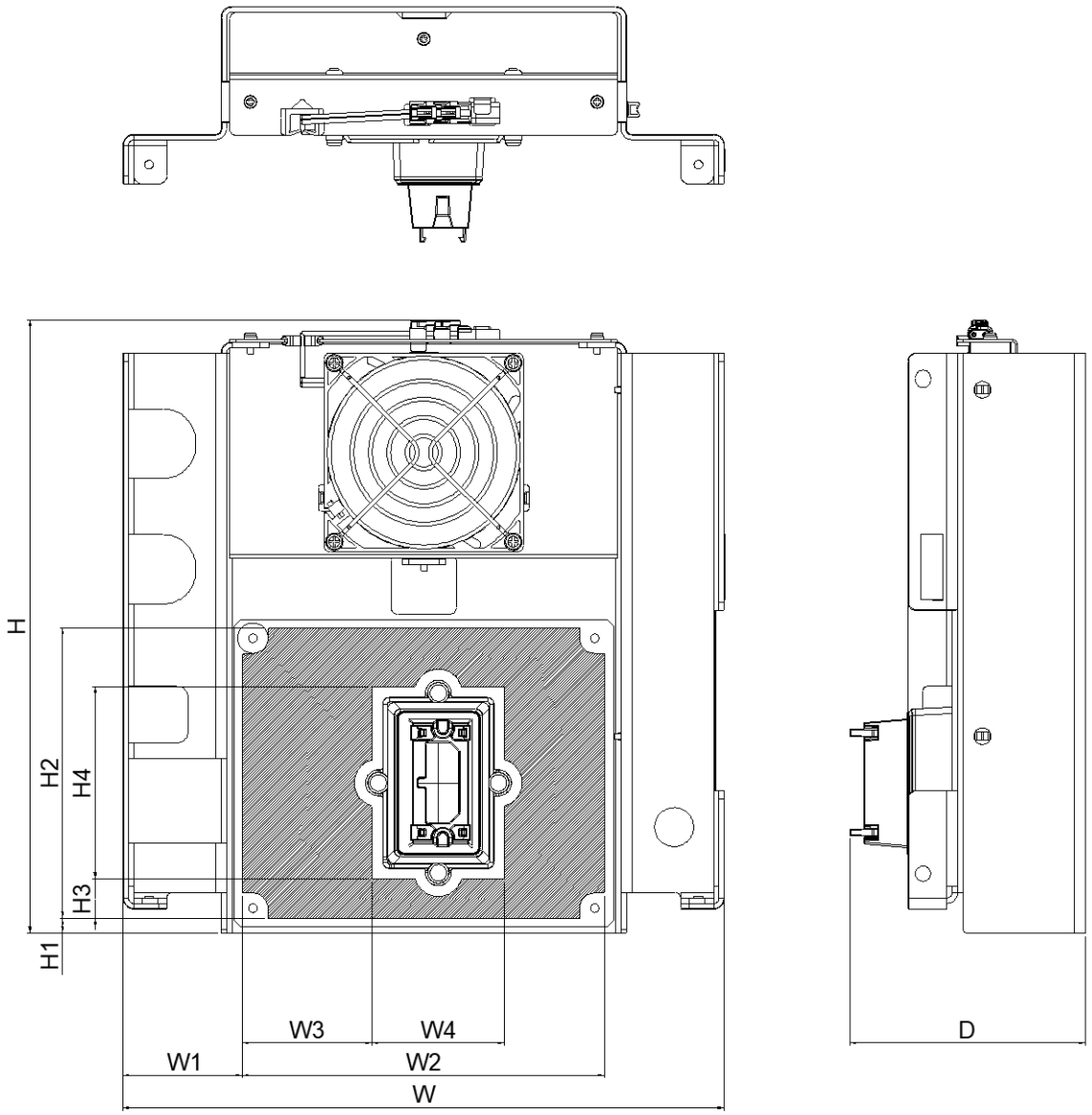

Figure 7-24

Unit: mm (inch)

Models	W	W1	W2	W3	W4	H	H1	H2	H3	H4	D
MKMP-MAPA1	237.6 (9.35)	53.8 (2.11)	130.0 (5.11)	41.1 (1.61)	61.3 (2.41)	251.3 (9.89)	7.0 (0.27)	134.0 (5.27)	18.0 (0.70)	89.0 (3.50)	83.3 (3.26)
MKMP-MAPB1	277.4 (10.92)	55.2 (2.17)	167.0 (6.57)	59.6 (2.34)	61.3 (2.41)	283.3 (11.15)	7.0 (0.27)	134.0 (5.27)	18.0 (0.70)	89.0 (3.50)	108.8 (4.28)
MKMP-MAPC1	243.8 (9.56)	17.5 (0.68)	208.8 (8.22)	73.4 (2.88)	92.0 (3.62)	309.3 (12.17)	9.5 (0.37)	137.0 (5.39)	15.6 (0.61)	64.3 (2.53)	127.7 (5.02)

Table 7-16

UVW wiring information for the assembly of adapter plate for motor.

<table>
<tr><th rowspan="2">Model</th><th colspan="3">Main Circuit Terminals
U/T1, V/T2, W/T3</th></tr>
<tr><th>Maximum Wire Gauge</th><th>Minimum Wire Gauge</th><th>Torque (±10%)</th></tr>
<tr><td>VFD1A6MP43JNNAA
VFD1A6MP43JFNAA</td><td rowspan="6">2.5 mm^2
(14 AWG)</td><td rowspan="6">2.5 mm^2
(14 AWG)</td><td rowspan="6">N/A</td></tr>
<tr><td>VFD3A3MP43JNNAA
VFD3A3MP43JFNAA</td></tr>
<tr><td>VFD4A7MP43JNNAA
VFD4A7MP43JFNAA</td></tr>
<tr><td>VFD6A2MP43JNNAA
VFD6A2MP43JFNAA</td></tr>
<tr><td>VFD8A5MP43JNNAA
VFD8A5MP43JFNAA</td></tr>
<tr><td>VFD11AMP43JNNAA</td></tr>
<tr><td>VFD11AMP43JFNAA</td><td rowspan="2">6 mm^2
(10 AWG)</td><td rowspan="2">6 mm^2
(10 AWG)</td><td rowspan="2">N/A</td></tr>
<tr><td>VFD15AMP43JNNAA
VFD15AMP43JFNAA</td></tr>
<tr><td>VFD24AMP43JNNAA</td><td rowspan="8">16 mm^2
(6 AWG)</td><td>10 mm^2
(8 AWG)</td><td rowspan="8">M4
18.36 kgf-cm
(15.93 lb-in.)
(1.8 Nm)</td></tr>
<tr><td>VFD24AMP43JFNAA</td><td>10 mm^2
(8 AWG)</td></tr>
<tr><td>VFD31AMP43JNNAA</td><td>10 mm^2
(8 AWG)</td></tr>
<tr><td>VFD31AMP43JFNAA</td><td>10 mm^2
(8 AWG)</td></tr>
<tr><td>VFD39AMP43JNNAA</td><td>16 mm^2
(6 AWG)</td></tr>
<tr><td>VFD39AMP43JFNAA</td><td>16 mm^2
(6 AWG)</td></tr>
<tr><td>VFD45AMP43JNNAA</td><td>16 mm^2
(6 AWG)</td></tr>
<tr><td>VFD45AMP43JFNAA</td><td>16 mm^2
(6 AWG)</td></tr>
</table>

Table 7-17

Installation

Frame A, B

1. Remove the hole plug of fan, and assemble hole plugs for fixing motor (the holes are for the special use of MPD).
2. Loosen the screws of top case and open it.
3. Follow the steps 3-1 to 3-3 as the graph shown below to assemble the fan adapter cable.
4. Make sure the hole positions and the hole sizes of the motor to use with MP300, and poke the holes at the corresponding positions of the adapter plate.
5. 5-1) Pass the motor power cable through the hole from the inside of the fixing holder.
   5-2) Take a temperature sensor and pass it through the hole from the inside of the fixing holder (skip this step if it's not necessary).
   5-3) Strip the end sides of motor power cable at least 6.5 mm, insert the bare sides to terminals and crimp them to been fixed.
   5-4) Insert the terminals to the terminal block according to the phases. And then assemble the terminal block has been wired to the fixing holder.
   5-5) Screw the adapter plate to the motor.
6. Assemble MP300 to the adapter plate, and assemble the temperature sensor cable, and then follow the step 6-2 as the graph shown below to tighten M5 screws. Torque: 20–25 kgf-cm / [17.3–21.7 lb-in.] / [1.96–2.45 Nm]
7. Assemble the top case and tighten M4 screws. Torque: 16–18 kgf-cm / [13.8–15.5 lb-in.] / [1.57–1.76 Nm]
8. Fix the fan adapter cable with wire mounts, and then connect the fan adapter cable to the fixed structure, see the step 8-2 as the graph shown below.

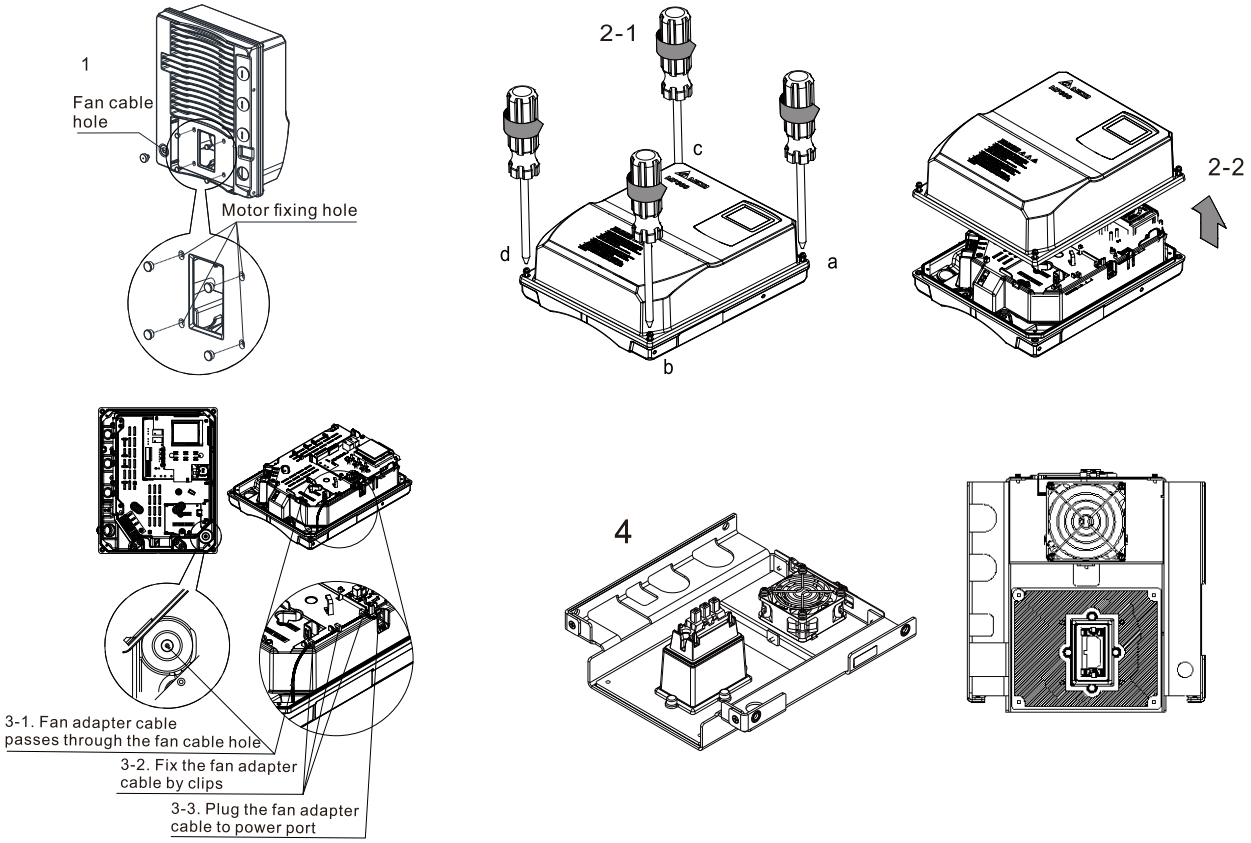

Figure 4-41

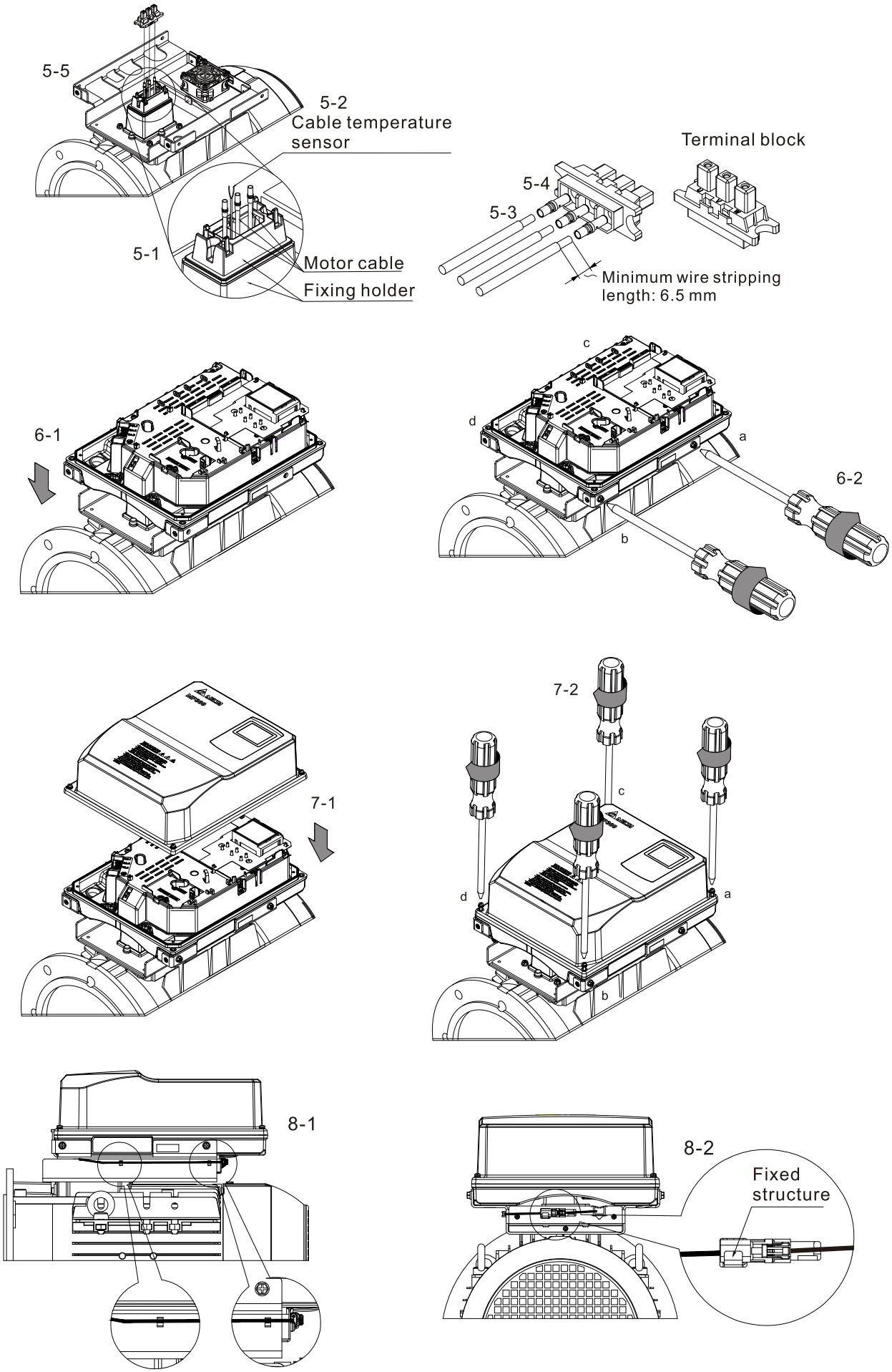
5-5
5-2
Cable temperature sensor
5-1
Motor cable
Fixing holder
Terminal block
5-4
5-3
Minimum wire stripping length: 6.5 mm
6-1
c
d
a
6-2
b
7-2
7-1
c
d
a
b
8-1
8-2
Fixed structure

Figure 4-42

Frame C

1. Loosen the screws of top case and open it.
2. Follow the steps 2-1 to 2-3 as the graph shown below to assemble the fan adapter cable.
3. Make sure the hole positions and the hole sizes of the motor to use with MP300, and poke the holes at the corresponding positions of the adapter plate.
4. 4-1) Pass the motor power cable through the hole from the inside of the fixing holder.
   4-2) Take a temperature sensor and pass it through the hole from the inside of the fixing holder (refer to 4-2-1 in Figure 7-28 for a detailed path of the temperature sensor; for the drive without assembling the adapter plate refer to 4-2-2 in Figure 7-28. Skip this step if it's not necessary).
   4-3) Screw the motor power cable according to the specifications in section 5-2 to the terminal block.
   4-4) Insert the terminals to the terminal block according to the phases. And then assemble the terminal block has been wired to the fixing holder.
   4-5) Screw the adapter plate to the motor.
5. Assemble MP300 to the adapter plate, and assemble the temperature sensor cable, and then follow the step 6-2 as the graph shown below to tighten M6 screws. Torque: 35–40 kgf-cm / 30.4–34.7 lb-in.] / [3.43–3.92 Nm]
6. Assemble the top case and tighten M4 screws. Torque: 16–18 kgf-cm / [13.8–15.5 lb-in.] / [1.57–1.76 Nm]
7. Fix the fan adapter cable with wire mounts, and then connect the fan adapter cable to the fixed structure, see the step 7-2 as the graph shown below.

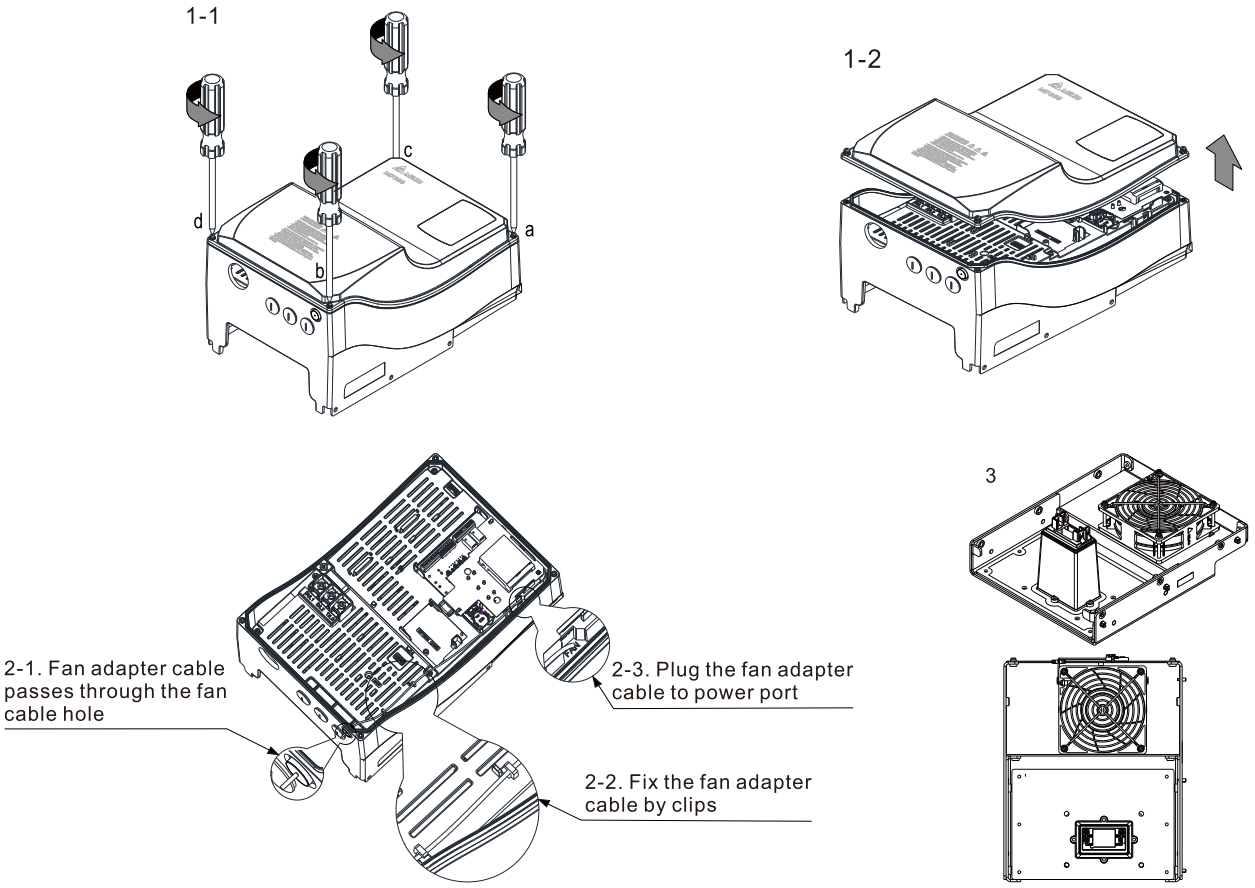

Figure 4-43

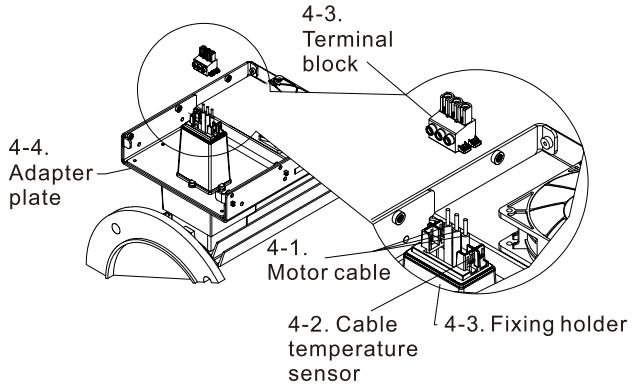
4-3.
Terminal
block
4-4.
Adapter
plate
4-1.
Motor cable
4-2. Cable
temperature
sensor
4-3. Fixing holder

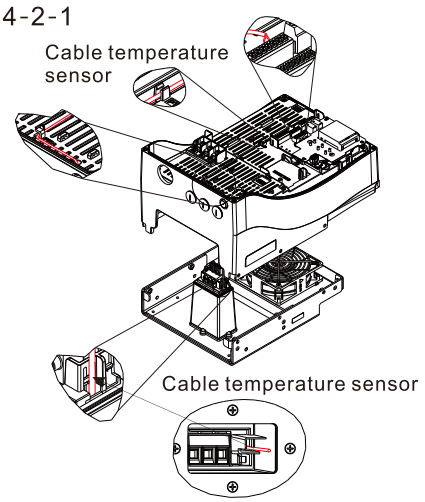
4-2-1
Cable temperature
sensor
Cable temperature sensor

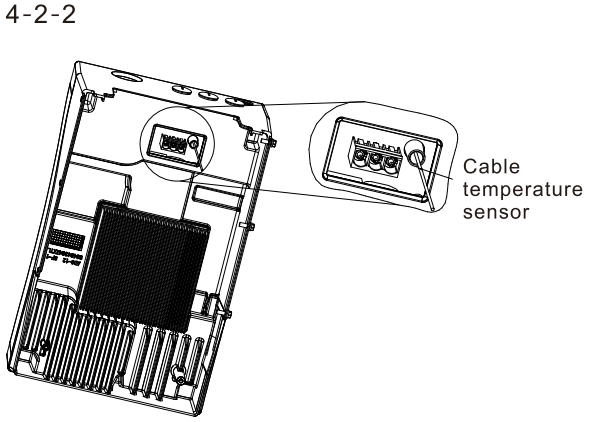
4-2-2
Cable
temperature
sensor

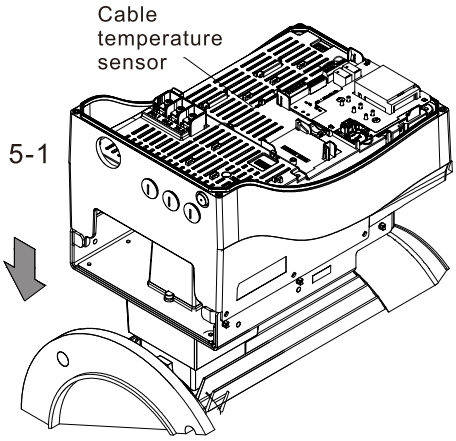
Cable
temperature
sensor
5-1

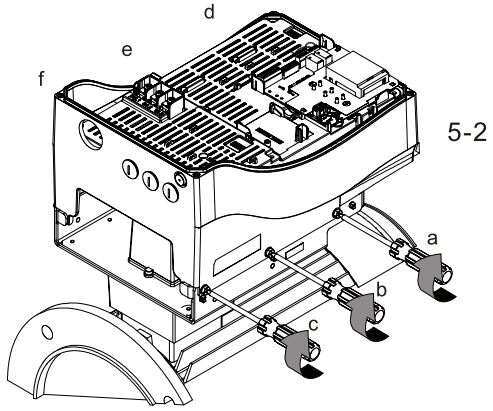
d
e
f
5-2
a
b
c

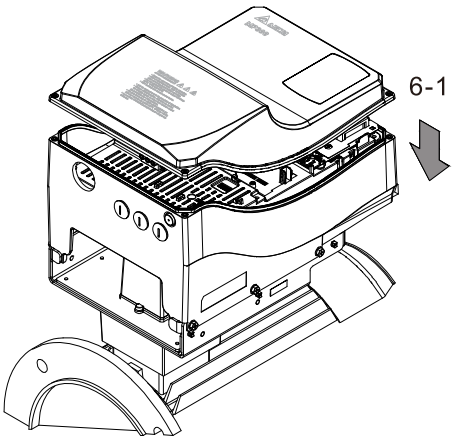
6-1

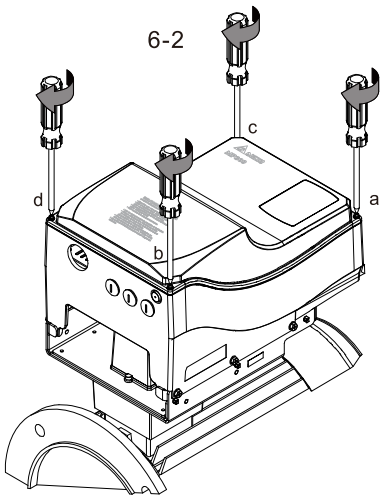
6-2
c
d
a
b

Figure 4-44

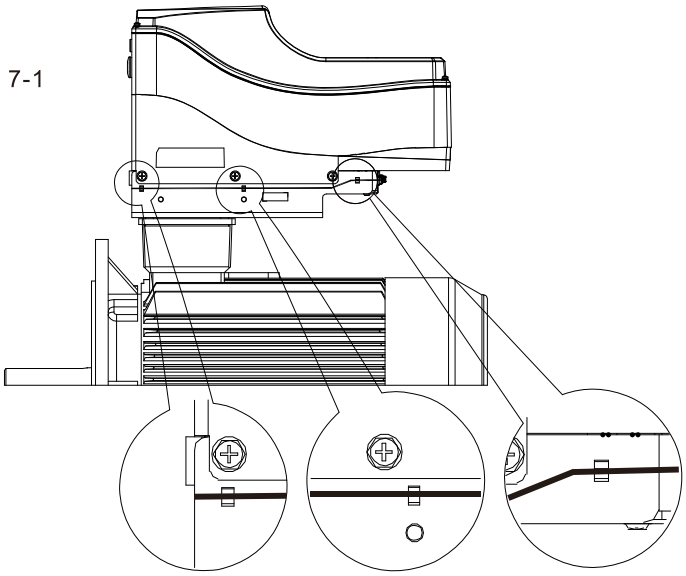

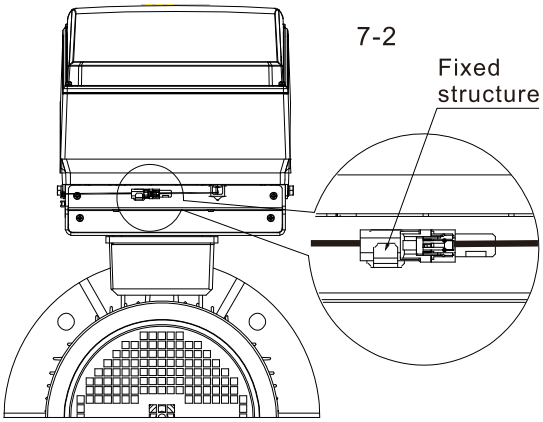

Figure 4-45

7-9 Fan and Fan Cord

- The appearance of fans and fan cords

	Models	Fan	Fan cord
Frame A	VFD1A6MP43JNNAA; VFD1A6MP43JFNAA; VFD3A3MP43JNNAA; VFD3A3MP43JFNAA; VFD4A7MP43JNNAA; VFD4A7MP43JFNAA; VFD6A2MP43JNNAA; VFD6A2MP43JFNAA; VFD8A5MP43JNNAA; VFD8A5MP43JFNAA; VFD11AMP43JNNAA	MKMP-FKMA 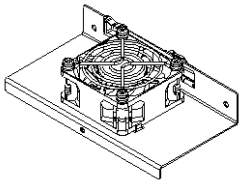	CBMP-CL0AA 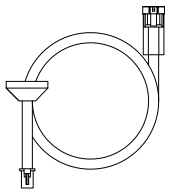
Frame B	VFD11AMP43JFNAA; VFD15AMP43JNNAA; VFD15AMP43JFNAA	MKMP-FKMB 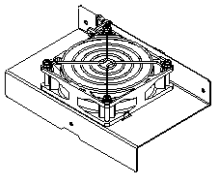	CBMP-CL0BA 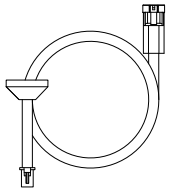
Frame C	VFD24AMP43JFNAA; VFD24AMP43JNNAA; VFD31AMP43JFNAA; VFD31AMP43JNNAA; VFD39AMP43JFNAA; VFD39AMP43JNNAA; VFD45AMP43JFNAA; VFD45AMP43JNNAA	MKMP-FKMC 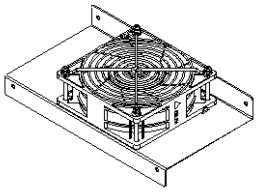	CBMP-CL0CA 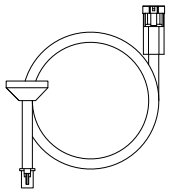

Table 7-18

- Disassemble the fan

Frame A / B

1. Press down the latch of the connector by hand (as indicated by the arrow in Figure 7-30) and pull apart to separate the connector smoothly.
2. Loosen the fixing screws, as shown in Figure 7-31.
   M3 screw *3, torque: 6–8 kgf-cm [5.2–6.9 Ib-in.] [0.58–0.78 Nm]
3. Pull the fan upward and take it out smoothly, as shown in Figure 7-32.

Top view

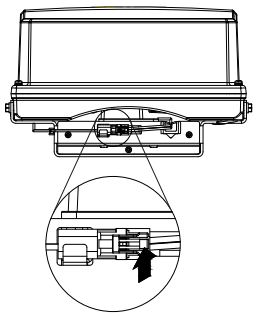

Figure 4-46

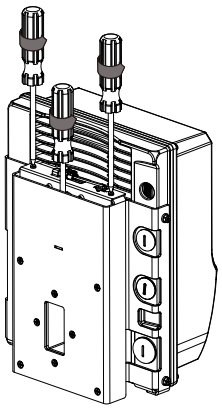

Figure 4-47

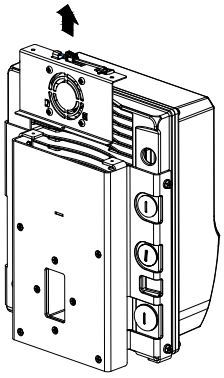

Figure 4-48

Frame C

1. Press down the latch of the connector by hand, and pull apart to separate the connector smoothly.
2. Loosen the fixing screws, as shown in Figure 7-34.
   M4 screw *4, torque: 8–10 kgf-cm [6.9–8.6 lb-in.] [0.78–0.98 Nm]
3. Pull the fan upward and take it out smoothly, as shown in Figure 7-35.

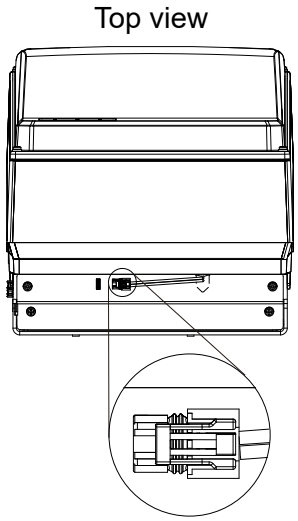

Figure 4-49

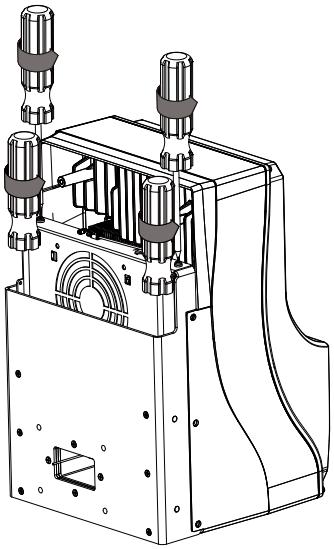

Figure 4-50

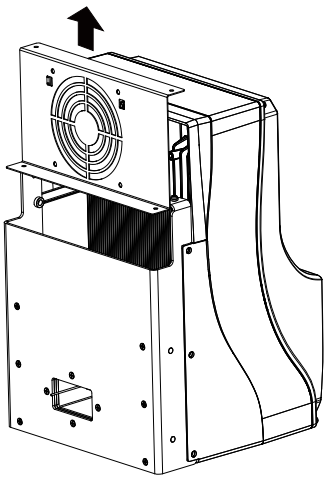

Figure 4-51

[This page intentionally left blank]

Chapter 8 Option Cards

8-1 Option Card Installation

8-2 CMM-PD02 -- Communication Extension Card, Profibus DP

8-3 CMM-DN02 -- Communication Extension Card, DeviceNet

8-4 CMM-EIP02 -- Communication Extension Card, EtherNet/IP, Modbus TCP

8-5 CMMP-BT01 -- Communication Extension Card, Bluetooth

8-6 Delta Standard Fieldbus Cables

The option cards in this chapter are optional accessories. Select the applicable option cards for your motor drive, or contact your local distributor for suggestions. The option cards can significantly improve the efficiency of the motor drive. To prevent damage to the motor drive during installation, remove the digital keypad and the cover before wiring.

8-1 Option Card Installation

8-1-1 Mounting Position of Option Cards

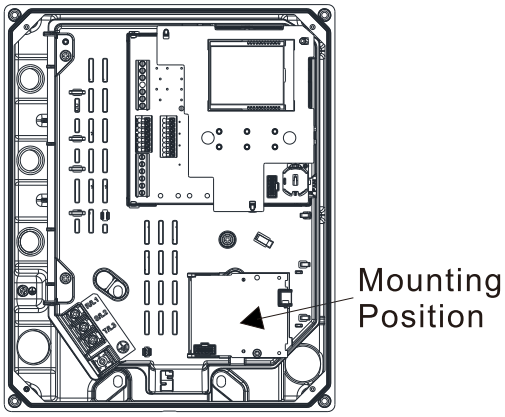

Figure 8-1

MP300 control board connector

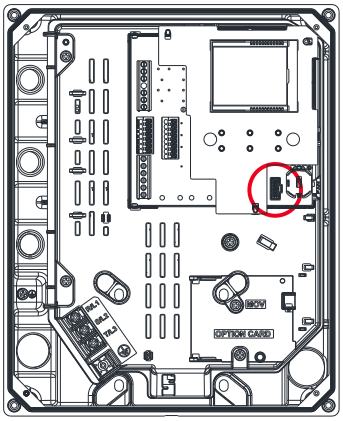

Figure 8-2

Option card connector

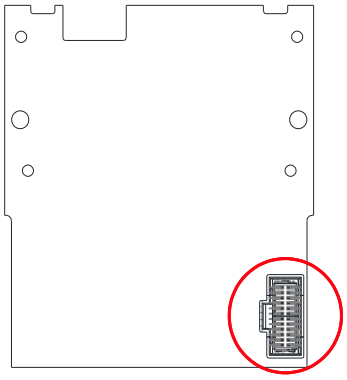

Figure 8-3

8-1-2 Option Card Installation

1. Turn off the power of the motor drive, use cross screwdriver to loosen four screws of the front cover and then remove it, as shown in Figure 8-4.
2. Check the MOV position if there is a screw tightened. If yes, then make sure the screw is tightened well, the recommended torque is 6-8 kgf-cm [5.2-6.9 lb-in] [0.59-0.78 Nm]. As shown in Figure 8-5.
3. Engage the lower end of the option card with the guiding slot, as shown in Figure 8-6.
4. Press the upper end of the option card to engage the clips, as shown in Figure 8-7.
5. Use cross screwdriver tighten one M3 screw, the recommended torque is 4-6 kgf-cm [3.5-5.2 lb-in] [0.39-0.59 Nm], as shown in Figure 8-8.
6. Connect the cable and fix it in the slotted hole, as shown in Figure 8-9.

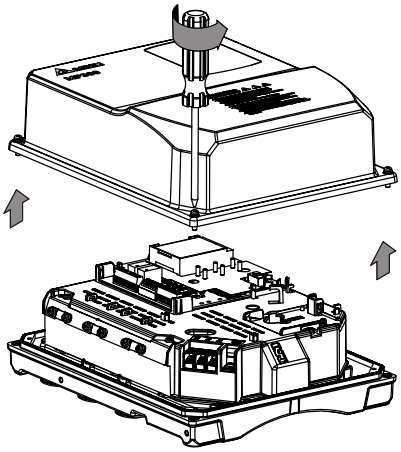

Figure 8-4

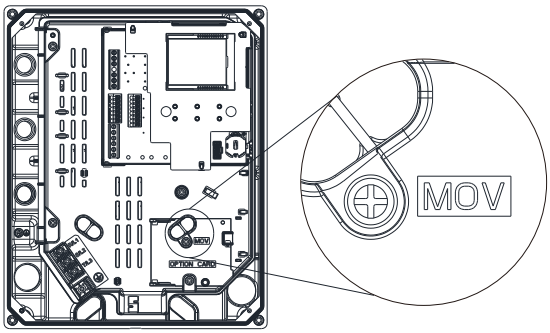

Figure 8-5

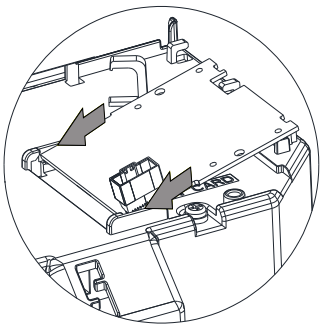

Figure 8-6

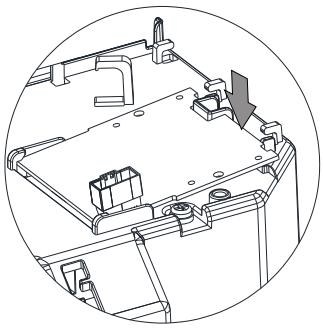

Figure 8-7

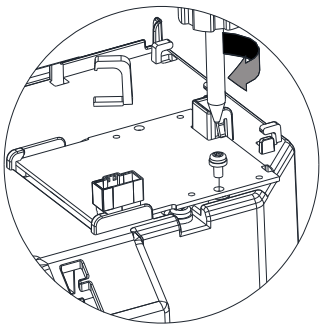

Figure 8-8

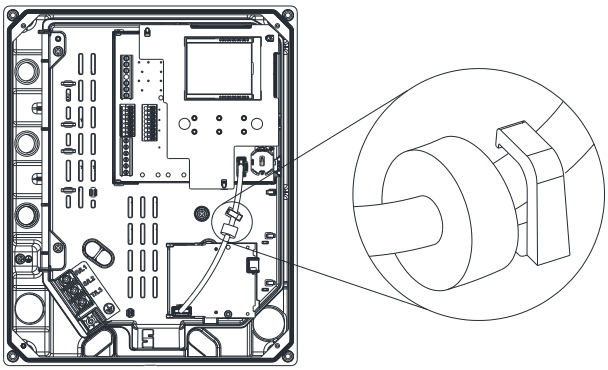

Figure 8-9

8-1-3 Option card cable

To correctly use the option cards, you must purchase the option cards along with the connection cables CBM-CL01A.

Communication cards	CMM-DN02, CMM-EIP02, CMM-PD02, CMMP-BT01
Cable	CBM-CL01A 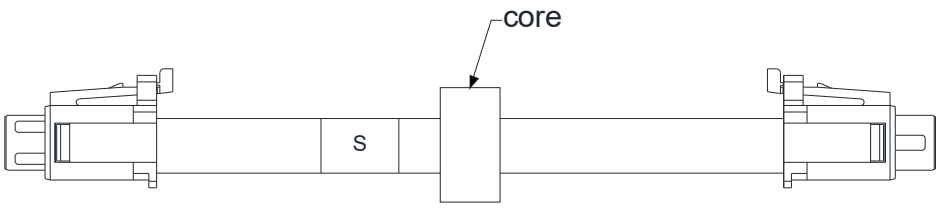 Figure 8-10

8-1-4 Grounded installation

- You must ground the option cards as listed below when wiring. The ground terminal is included in the option card package, as shown in Figure 8-11.
  1. CMM-PD02
  2. CMM-DN02
  3. CMM-EIP02

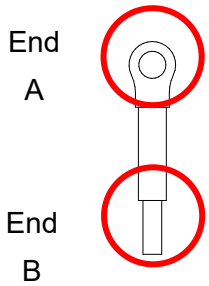

Figure 8-11

- Installation Method

  The B end of the grounding wire connects to the ground terminal block of the option card, as the No.6 shows in Figure 8-12 (see Chapter 8 for the ground terminal block position of other option cards). The A end of the grounding wire connects to the drive's PE, as the circles shown in Figure 8-13.

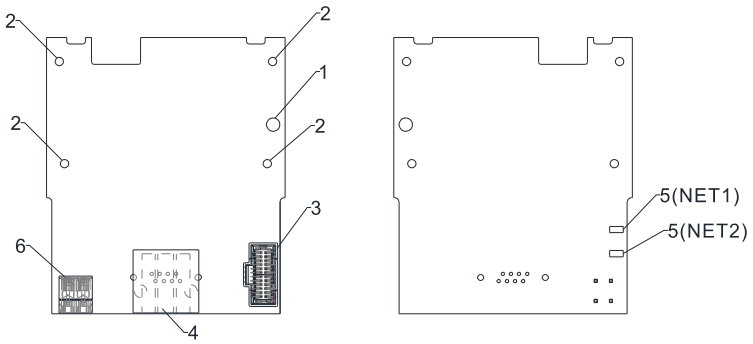

Figure 8-12

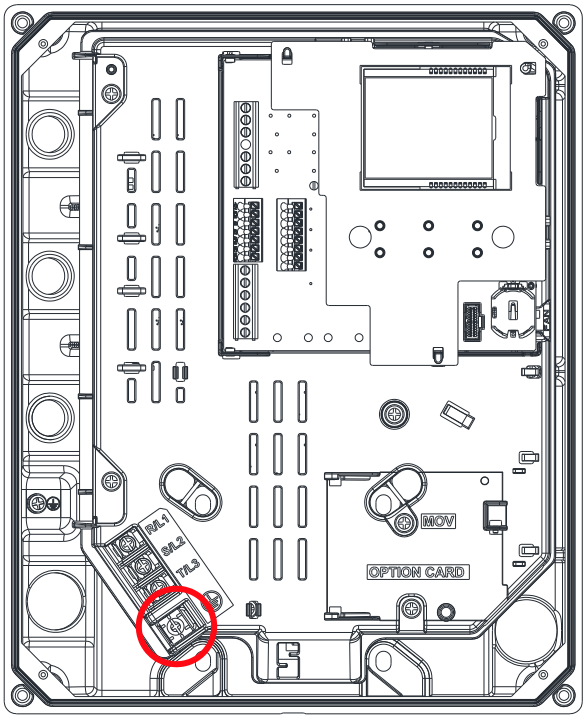

Figure 8-13

Frame	Screw	Torque (±10%)
A, B	M4	8 kgf-cm [7.0lb-in] [0.78Nm]

8-2 CMM-PD02 -- Communication Extension Card, Profibus DP

■ Product Profile

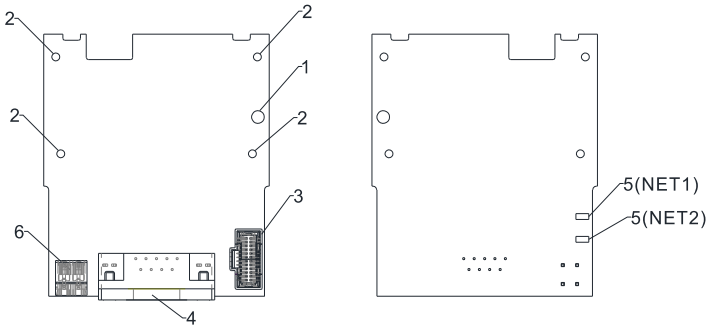

Wire gauge: 0.25–0.5 mm^2 [24–20 AWG]
Stripping length: 7–8 mm
Screw torque: 2 kgf-cm / [1.7 lb-in.] / [0.2 Nm]

1. Screw fixing hole
2. Positioning hole
3. AC motor drive connection port
4. Communicatio n port
5. Indicator NET1, NET2
6. Ground terminal block

■ Features

1. Supports PZD control data exchange.
2. Supports PKW access AC motor drive parameters.
3. Supports user diagnosis function.
4. Auto-detects baud rates; supports a maximum of 12 Mbps.

■ Specifications

PROFIBUS DP Connector

Interface	DB9 connector
Transmission method	High-speed RS-485
Transmission cable	Shielded twisted-pair cable
Electrical isolation	500 V_{DC}

Communication

Message type	Cyclic data exchange
Module name	CMM-PD02
GSD document	DELTA08DB.GSD
Product ID	08DB (HEX)
Serial transmission speed supported (auto-detection)	9.6 kbps; 19.2 kbps; 93.75 kbps; 187.5 kbps; 500 kbps; 1.5 Mbps; 3 Mbps; 6 Mbps; 12 Mbps (bits per second)

Electrical Specification

Power supply voltage	15 V_{DC} (supplied by the AC motor drive)
Insulation voltage	500 V_{DC}
Power consumption	1 W
Weight	28 g

Environment

Noise immunity	ESD (EN 61800-5-1 , IEC 6100-4-2) EFT (EN 61800-5-1, IEC 6100-4-4) Surge Test (EN 61800-5-1, IEC 6100-4-5) Conducted Susceptibility Test (IEC 61800-5-1, IEC 6100-4-6)
Operation / storage	Operation: -10–50°C (temperature), 90% (humidity) Storage: -25–70°C (temperature), 95% (humidity)
Shock / vibration resistance	International standards: IEC 61131-2, IEC 68-2-6 (TEST Fc) / IEC 61131-2 & IEC 68-2-27 (TEST Ea)

■ Installation

PROFIBUS DP Connector

PIN	Signal	Definition
1	-	Not defined
2	-	Not defined
3	Rxd / Txd-P	Sending / receiving data P(B)
4	-	Not defined
5	DGND	Data reference ground
6	VP	Power voltage – positive
7	-	Not defined
8	Rxd / Txd-N	Sending / receiving data N(A)
9	-	Not defined

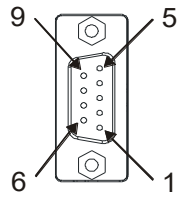

■ LED Indicator & Troubleshooting

There are two LED indicators on the CMM-PD02: POWER LED and NET LED.
POWER LED displays the status of the working power. NET LED displays the connection status of the communication.

POWER LED (NET2)

LED status	Indication	Corrective Action
Green light on	Power supply in normal status.	No action is required.
OFF	No power	Check if the connection between the CMM-PD02 and the AC motor drive is normal.

NET LED (NET1)

LED status	Indication	Corrective Action
Green light on	Normal status	No action is required.
Red light on	The CMM-PD02 is not connected to PROFIBUS DP bus.	Connect the CMM-PD02 to the PROFIBUS DP bus.
Red light flashes	Invalid PROFIBUS communication address	Set the PROFIBUS address of the CMM-PD02 between 1–125 (decimal).
Orange light flashes	The CMM-PD02 fails to communicate with the AC motor drive.	Switch off the power and check whether the CMM-PD02 is correctly installed and normally connected to the AC motor drive.

8-3 CMM-DN02 -- Communication Extension Card, DeviceNet

■ Product Profile

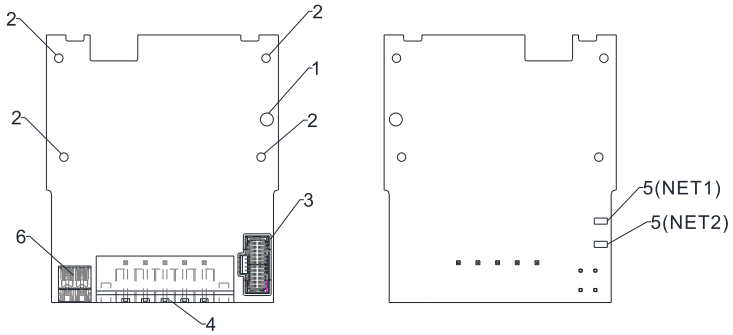

Wire gauge: 0.25–0.5 mm^2 [24–20 AWG]
Stripping length: 7–8 mm
Screw torque: 2 kgf-cm / [1.7 lb-in.] / [0.2 Nm]

1. Screw fixing hole
2. Positioning hole
3. AC motor drive connection port
4. Communication port
5. Indicator NET1, NET2
6. Ground terminal block

■ Features

1. Based on the high-speed communication interface of Delta's HSSP protocol, the AC motor drive can be controlled in real-time.
2. Supports Group 2 only connection and polling I/O data exchange.
3. For I/O mapping, supports a maximum of 32 words input and 32 words output.
4. Supports EDS file configuration in DeviceNet configuration software.
5. Supports all baud rates on DeviceNet bus: 125 kbps, 250 kbps, 500 kbps and extendable baud rate mode.
6. Node address and baud rate can be set in the AC motor drive.
7. Power is supplied from the AC motor drive.

■ Specifications

DeviceNet Connector

Interface	5-PIN open pluggable connector. PIN interval: 5.08 mm
Transmission method	CAN
Transmission cable	Shielded twisted-pair cable (with 2 power cables)
Transmission speed	125 kbps, 250 kbps, 500 kbps and extendable baud rate mode

AC motor drive connection port

Interface	24 PIN communication terminal
Transmission method	SPI communication
Terminal function	1. Communication module communicates with the AC motor drive through this port. 2. The AC motor drive supplies power to communication module through this port.
Communication protocol	Delta HSSP protocol

Electrical Specification

Power supply voltage	15 V_{DC} (supplied by the AC motor drive)
Insulation voltage	500 V_{DC}
Communication cable power consumption	0.85 W
Power consumption	1 W
Weight	23 g

Environment

Noise immunity	ESD (EN 61800-5-1, IEC 6100-4-2) EFT (EN 61800-5-1, IEC 6100-4-4) Surge Test (EN 61800-5-1, IEC 6100-4-5) Conducted Susceptibility Test (EN 61800-5-1, IEC 6100-4-6)
Operation / storage	Operation: -10–50°C (temperature), 90% (humidity) Storage: -25–70°C (temperature), 95% (humidity)
Shock / vibration resistance	International standards: EN 61800-5-1, IEC 60068-2-6 / EN 61800-5-1, IEC 60068-2-27

DeviceNet Connector

PIN	Signal	Color	Definition
1	V+	Red	24 V_{DC}
2	H	White	Signal+
3	S	-	Ground
4	L	Blue	Signal-
5	V-	Black	0V

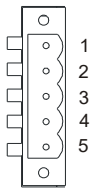

■ LED Indicator & Troubleshooting

There are two LED indicators on the CMM-DN02:
NS LED and MS LED. NS LED and MS LED are dual-color LEDs, displaying the connection status and error messages of the communication module.

NS LED (NET2)

LED status	Indication	Corrective Action
OFF	No power supply or the CMM-DN02 does not pass the MAC ID test.	1. Check the power to the CMM-DN02 and see if the connection is normal. 2. Make sure there is at least one node on the bus. Check if the baud rate of the CMM-DN02 is the same as that of the other nodes.
Green light flashes	The CMM-DN02 is on-line but does not connect to the master.	1. Configure the CMM-DN02 to the scan list of the master. 2. Re-download the configured data to the master.
Green light on	The CMM-DN02 is on-line and normally connects to the	No action is required.

LED status	Indication	Corrective Action
Red light flashes	The CMM-DN02 is on-line, but I/O connection is timed-out.	1. Check if the network connection is normal. 2. Check if the master operates normally.
Red light on	1. Broken communication 2. MAC ID test failure 3. No network power supply. CMM-DN02 is off-line.	1. Make sure all MAC IDs on the network are unique. 2. Check if the network installation is normal. 3. Check if the baud rate of the CMM-DN02 is the same as that of the other nodes. 4. Check if the node address of the CMM-DN02 is illegal. 5. Check if the network power supply is normal.

MS LED (NET1)

LED status	Indication	Corrective Action
OFF	No power supply or device is off-line	Check the power supply of the CMM-DN02 and see if the connection is normal.
Green light flashes	Waiting for I/O data	Switch the master PLC to RUN status.
Green light on	I/O data is normal	No action is required.
Red light flashes	Mapping error	Reset the CMM-DN02. Re-power the AC motor drive.
Red light on	Hardware error	See the fault codes displayed on the keypad and find the causes. Return the unit to the factory for repair if necessary.
Orange light flashes	The CMM-DN02 is connecting with the AC motor drive.	If the flashing lasts for a long period of time, turn off the power to check if the CMM-DN02 and the AC motor drive install correctly and are normally connected to each other.

8-4 CMM-EIP02 -- Communication Extension Card, EtherNet/IP, Modbus TCP

■ Product Profile

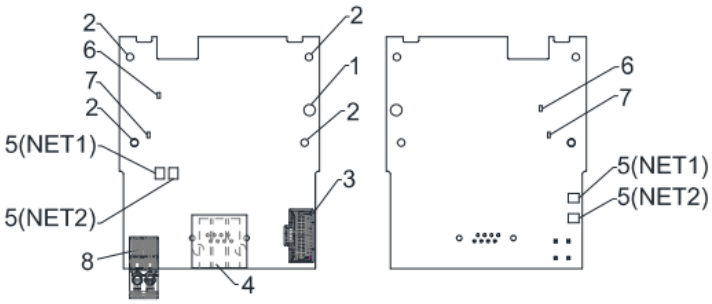

Wire gauge: 0.25–0.5 mm^2 [24–20 AWG]
Stripping length: 7–8 mm
Screw torque: 2 kgf-cm / [1.7 lb-in.] / [0.2 Nm]

1. Screw fixing hole
2. Positioning hole
3. AC motor drive connection port
4. Communication port
5. Indicator NET1 (NS), NET2 (MS)
6. POWER
7. LINK
8. Ground terminal block

■ Features

1. Supports Modbus TCP and EtherNet/IP protocol
2. 32 / 32 words parameter reading / writing correspondence
3. User-defined corresponding parameters
4. MDI / MDI-X auto-detect
5. E-mail alarm
6. IP filter simple firewall function

■ Specifications

Network Interface

Interface	RJ45 with Auto MDI / MDIX
Number of ports	1 Port
Transmission method	IEEE 802.3, IEEE 802.3u
Transmission cable	Category 5e shielding 100 M
Transmission speed	10/100 Mbps Auto-Detect
Network protocol	ICMP, IP, TCP, UDP, DHCP, HTTP, SMTP, Modbus over TCP/IP, EtherNet/IP, Delta Configuration

Electrical Specification

Power supply voltage	15 V_{DC}
Insulation voltage	500 V_{DC}
Power consumption	0.8 W
Weight	25 g

Environment

Noise immunity	ESD (EN 61800-5-1, IEC 61000-4-2) EFT (EN 61800-5-1, IEC 61000-4-4) Surge Test (EN 61800-5-1, IEC 61000-4-5) Conducted Susceptibility Test (EN 61800-5-1, IEC 61000-4-6)
Operation / storage	Operation: -10–50°C (temperature), 90% (humidity) Storage: -25–70°C (temperature), 95% (humidity)
Shock / vibration resistance	International standards: EN 61800-5-1, IEC 60068-2-6 / EN 61800-5-1, IEC 60068-2-27

■ Installation

Connecting the CMM-EIP02 to the Network

1. Turn off the power of the drive.
2. Open the front cover of the drive.
3. Connect the CAT-5e network cable to the RJ45 port of the CMM-EIP02 (as shown in the right figure).

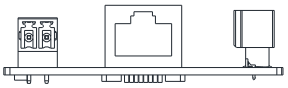

RJ45 PIN Definition

PIN	Signal	Definition
1	Tx+	Positive pole for data transmission
2	Tx-	Negative pole for data transmission
3	Rx+	Positive pole for data reception
4	--	N/C

PIN	Signal	Definition
5	--	N/C
6	Rx-	Negative pole for data reception
7	--	N/C
8	--	N/C

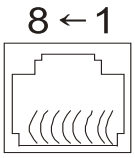

■ MP300 Communication Parameter Settings when Connecting to Ethernet

When you connect the MP300 to Ethernet, set up the communication parameters based on the table below. The Ethernet master reads and writes the frequency command words and operation command words after you set the communication parameters.

MP300 Parameters	Function	Current Setting Value	Description
00-20	Master frequency command source	8	The frequency command is controlled by the communication card.
00-21	Operation command source	5	The operation command is controlled by the communication card.
09-30	Communication Decoding Method	0	The decoding method for Delta AC motor drive.
09-75	IP configuration	0	0: Static IP 1: Dynamic IP (DHCP)
09-76	IP address 1	192	IP address 192.168.1.5
09-77	IP address 2	168	IP address 192.168.1.5
09-78	IP address 3	1	IP address 192.168.1.5
09-79	IP address 4	5	IP address 192.168.1.5
09-80	Netmask 1	255	Netmask 255.255.255.0
09-81	Netmask 2	255	Netmask 255.255.255.0
09-82	Netmask 3	255	Netmask 255.255.255.0
09-83	Netmask 4	0	Netmask 255.255.255.0
09-84	Default gateway 1	192	Default gateway 192.168.1.1.1

MP300 Parameters	Function	Current Setting Value	Description
09-85	Default gateway 2	168	Default gateway 192.168.1.1.1
09-86	Default gateway 3	1	Default gateway 192.168.1.1.1
09-87	Default gateway 4	1	Default gateway 192.168.1.1.1

■ LED Indicator & Troubleshooting

LED indicators

Indicator	Status	Indication	Corrective Action
NET1 (NS)	The red and green lights flash alternately.	Self-test of network status	No action is required.
	Green light is ON	Already established a connection with CIP	No action is required.
	Green light flashes	Never establish connection with CIP after powering ON	No action is required.
	Red light is ON	Duplicate IP	Check if the IP setting is wrong
	Red light flashes	Communication time out / disconnected / IP changed	Check if the communication setting is wrong
	Light is OFF	Network is not connected	Check if the network cable is connected.
NET2 (MS)	The red and green lights flash alternately.	Self-test of product status	No action is required.
	Green light is ON	The parameter setting finished	No action is required.
	Green light flashes	No parameter setting	Follow manual instructions to set parameters
	Red light is ON	Occur an error cannot be restored	Hardware malfunction, contact with the dealer
	Red light flashes	Occur an error can be restored	Check if any parameter setting is wrong
	Light is OFF	No power supply	Check the power supply.
POWER	ON	Power supply in normal status	No action is required.
	Light is OFF	No power supply	Check the power supply.
LINK	ON	Sending / receiving network packet	No action is required.
	Light is OFF	Network is not connected	Check if the network cable is connected.

Troubleshooting

Abnormality	Cause	Corrective Actions
POWER LED OFF	The AC motor drive is not powered.	Check the power of the AC motor drive, and see if the power supply is normal.
	The CMM-EIP02 is not connected to the AC motor drive.	Ensure that the CMM-EIP02 is connected to the AC motor drive.

Abnormality	Cause	Corrective Actions
LINK LED OFF	The CMM-EIP02 is not connected to network.	Ensure that the network cable is correctly connected to network.
	Poor contact to the RJ45 connector	Ensure that the RJ45 connector is connected to the Ethernet port.
Cannot find communication card	The CMM-EIP02 is not connected to the network.	Ensure that the CMM-EIP02 is correctly connected to the network.
	The PC and the CMM-EIP02 are in different networks and blocked by network firewall.	Search by IP or set up relevant settings using the AC motor drive keypad.
Cannot open CMM-EIP02 setup page	The CMM-EIP02 is not connected to the network.	Ensure that the CMM-EIP02 is correctly connected to the network.
	Incorrect communication setting in DCISoft	Ensure that the communication setting in DCISoft is set to Ethernet.
	The PC and the CMM-EIP02 are in different networks and blocked by network firewall.	Set up with the AC motor drive keypad.
Can open CMM-EIP02 setup page, but cannot use web monitor	Incorrect network setting in the CMM-EIP02	Check if the network setting for the CMM-EIP02 is correct. For the Intranet setting in your company, please consult your IT staff. For the Internet setting at home, please refer to the network setting instructions provided by your ISP.
Cannot send e-mails	Incorrect network setting in the CMM-EIP02	Check if the network setting for the CMM-EIP02 is correct.
	Incorrect mail server setting	Confirm the IP address for the SMTP-Server.

8-5 CMMP-BT01 -- Communication Extension Card, Bluetooth

■ Product Profile

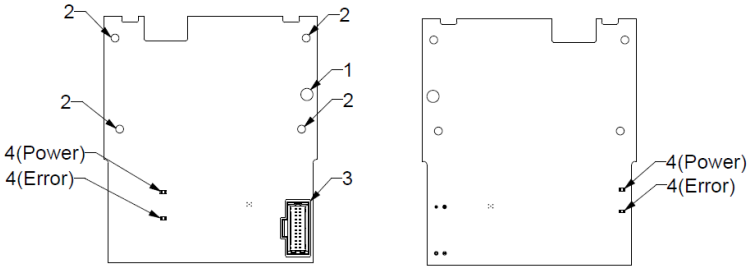

Wire gauge: 0.25–0.5 mm^2 [24–20 AWG]
Stripping length: 7–8 mm
Screw torque: 2 kgf-cm / [1.7 lb-in.] / [0.2 Nm]

1. Screw fixing hole
2. Positioning hole
3. AC motor drive connection port
4. Indicator POWER, ERROR

■ Features

1. Support to communicate with handhold devices via bluetooth signal.
2. Communication and power supply are fully isolated, and have strong noise immunity.

■ Specifications

Specifications of the wireless

Interface	Bluetooth
Transmission speed	1 Mbps / 2 Mbps
Communication protocol	GATT
Frequency	2.402–2.480GHz
Communication range	50m (under the circumstances of no barriers and no interruptions)

Electrical specification

Power supply voltage	15 V_{DC}
Insulation voltage	500 V_{DC}
Power consumption	0.8 W
Weight	25 g

Environment

Noise immunity	ESD (EN 61800-5-1, IEC 6100-4-2) EFT (EN 61800-5-1, IEC 6100-4-4) Surge Test (EN 61800-5-1, IEC 6100-4-5) Conducted Susceptibility Test (EN 61800-5-1, IEC 6100-4-6)
Operation / storage	Operation: -10–50°C (temperature), 90% (humidity) Storage: -25–70°C (temperature), 95% (humidity)
Shock / vibration resistance	International standards: IEC 61131-2, IEC 68-2-6 (TEST Fc) / IEC 61131-2 & IEC 60068-2-27 (TEST Ea)

■ LED Indicator & Troubleshooting

There are two LED indicators on the CMMP-BT01: POWER LED and ERROR LED.
POWER LED displays the status of the working power. ERROR LED displays the connection status of the communication whether it's abnormal.

POWER LED

LED status	Indication	Corrective Action
Green light is ON	Power supply in normal status.	No action is required.
OFF	No power	Check if the connection between the CMMP-BT01 and the AC motor drive is normal.
Green light flashes	APP connects with the bluetooth card	No action is required.

ERROR LED

LED status	Indication	Corrective Action
OFF	Normal status	No action is required.
Red light is ON	The bluetooth card and MP300 have abnormal communication	1. Re-power ON. 2. Remove and insert the bluetooth card again. 3. Check the wiring. 4. Contact with Delta.
Red light flashes	This model or the firmware version does not support the bluetooth card.	1. Make sure the series and the firmware version are as follows: ● MH300 series: V1.03 and later ● MS300 series: V1.08 and later ● MS300-HS series: V5.04 and later ● MP300 series: V1.0 and later 2. Contact with Delta.

8-6 Delta Standard Fieldbus Cables

Delta Standard Fieldbus Cables	Models	Descriptions	Length
DeviceNet Cable	UC-DN01Z-01A	DeviceNet cable	305 m
	UC-DN01Z-02A	DeviceNet cable	305 m
Ethernet / EtherCAT cable	UC-EMC003-02A	Ethernet / EtherCAT cable, Shielding	0.3 m
	UC-EMC005-02A	Ethernet / EtherCAT cable, Shielding	0.5 m
	UC-EMC010-02A	Ethernet / EtherCAT cable, Shielding	1 m
	UC-EMC020-02A	Ethernet / EtherCAT cable, Shielding	2 m
	UC-EMC050-02A	Ethernet / EtherCAT cable, Shielding	5 m
	UC-EMC100-02A	Ethernet / EtherCAT cable, Shielding	10 m
	UC-EMC200-02A	Ethernet / EtherCAT cable, Shielding	20 m
PROFIBUS Cable	UC-PF01Z-01A	PROFIBUS DP cable	305 m

Chapter 9 Specifications

9-1 460V Models

9-2 General Specifications

9-3 Environment for Operation, Storage and Transportation

9-4 Derating for Ambient Temperature, Altitude and Carrier Frequency

9-5 Specifications of Motor

9-1 460V Models

460V MPD series_three-phase

Frame		A			
MPD models: MPD_ _ _ 30C43□2B MPD_ _ _ 30C43□2D		75B		15C	
		N	F	N	F
Applicable Motor Output (kW)		0.75		1.5	
Applicable Motor Output (HP)		1		2	
Applicable AC Motor Drive Models		VFD1A6MP43JNNAA	VFD1A6MP43JFNAA	VFD3A3MP43JNNAA	VFD3A3MP43JFNAA
Applicable Motor Models		MSI75B-30CDXS2B1AP MSI75B-30CDXS2D1AP		MSI15C-30CDXS2B1AP MSI15C-30CDXS2D1AP	
Output Rating	Motor Rated Current (A)	1.5		3.1	
	Rated Output Torque (N.m)	2.3		4.7	
	Rated Output Speed (rpm)	3000			
	Carrier Frequency of AC Motor Drive (kHz) *1	2–15			
Input Rating	Rated Input Current (A)	1.9		3.8	
	Rated Voltage / Frequency	Three-phase 380–480 VAC (-15–10%), 50/60 Hz			
	Mains Input Voltage Range (V_{AC})	323–528			
	Mains Frequency Range (Hz)	47–63			
Cooling Method		Fan cooling			
EMC Filter		---	Built-in	---	Built-in
CE / RE Class *3		C1 / C2			
IP Rating		IP55			
PDS Efficiency Class *2		IES2			

Frame		A			
MPD models: MPD_ _ _ 30C43□2B MPD_ _ _ 30C43□2D		22C		30C	
		N	F	N	F
Applicable Motor Output (kW)		2.2		3	
Applicable Motor Output (HP)		3		4	
Applicable AC Motor Drive Models		VFD4A7MP43JNNAA	VFD4A7MP43JFNAA	VFD6A2MP43JNNAA	VFD6A2MP43JFNAA
Applicable Motor Models		MSI22C-30CDXS2B1AP MSI22C-30CDXS2D1AP		MSI30C-30CDXS2B1AP MSI30C-30CDXS2D1AP	
Output Rating	Motor Rated Current (A)	4.4		5.8	
	Rated Output Torque (N.m)	7		9.5	
	Rated Output Speed (rpm)	3000			
	Carrier Frequency of AC Motor Drive (kHz) *1	2–15			
Input Rating	Rated Input Current (A)	5.4		7.2	
	Rated Voltage / Frequency	Three-phase 380–480 VAC (-15–10%), 50/60 Hz			
	Mains Input Voltage Range (V_{AC})	323–528			
	Mains Frequency Range (Hz)	47–63			
Cooling Method		Fan cooling			
EMC Filter		---	Built-in	---	Built-in
CE / RE Class *3		C1 / C2			
IP Rating		IP55			
PDS Efficiency Class *2		IES2			

Frame		A			B
MPD models: MPD_ _ _ 30C43□2B MPD_ _ _ 30C43□2D		40C		55C	
		N	F	N	F
Applicable Motor Output (kW)		4.0		5.5	
Applicable Motor Output (HP)		5.5		7.5	
Applicable AC Motor Drive Models		VFD8A5MP43JNNAA	VFD8A5MP43JFNAA	VFD11AMP43JNNAA	VFD11AMP43JFNAA
Applicable Motor Models		MSI40C-30CDXS2B1AP MSI40C-30CDXS2D1AP		MSI55C-30CDXS2B1AP MSI55C-30CDXS2D1AP	MSI55C-30CDXS2BFAP MSI55C-30CDXS2DFAP
Output Rating	Motor Rated Current (A)	8		11	
	Rated Output Torque (N.m)	12.7		17.5	
	Rated Output Speed (rpm)	3000			
	Carrier Frequency of AC Motor Drive (kHz) *1	2–15			
Input Rating	Rated Input Current (A)	9.9		13.8	
	Rated Voltage / Frequency	Three-phase 380–480 VAC (-15–10%), 50/60 Hz			
	Mains Input Voltage Range (V_{AC})	323–528			
	Mains Frequency Range (Hz)	47–63			
Cooling Method		Fan cooling			
EMC Filter		---	Built-in	---	Built-in
CE / RE Class *3		C1 / C2			
IP Rating		IP55			
PDS Efficiency Class *2		IES2			

Frame		B	
MPD models: MPD_ _ _ 30C43□2B MPD_ _ _ 30C43□2D		75C	
		N	F
Applicable Motor Output (kW)		7.5	
Applicable Motor Output (HP)		10	
Applicable AC Motor Drive Models		VFD15AMP43JNNAA	VFD15AMP43JFNAA
Applicable Motor Models		MSI75C-30CDXS2B1AP MSI75C-30CDXS2D1AP	
Output Rating	Motor Rated Current (A)	14.7	
	Rated Output Torque (N.m)	23.8	
	Rated Output Speed (rpm)	3000	
	Carrier Frequency of AC Motor Drive (kHz) *1	2–15	
Input Rating	Rated Input Current (A)	18.5	
	Rated Voltage / Frequency	Three-phase 380–480 VAC (-15–10%), 50/60 Hz	
	Mains Input Voltage Range (V_{AC})	323–528	
	Mains Frequency Range (Hz)	47–63	
Cooling Method		Fan cooling	
EMC Filter		---	Built-in
CE / RE Class *3		C1 / C2	
IP Rating		IP55	
PDS Efficiency Class *2		IES2	

Table 9-1

NOTE:

*1: The AC motor drive have to derating when the carrier frequency is higher than the default. Refer to section 9-4 for derating curve.

*2: Power drive system (PDS) that IEC 61800-9-2 defines.

*3: The carrier frequency is 4 kHz.

460V MP300 series_three-phase

Frame		A			
Model: VFD _ _ _ MP43J ▯ NAA		1A6		3A3	
		N	F	N	F
Applicable Motor Output (kW)		0.75		1.5	
Applicable Motor Output (HP)		1		2	
Output Rating	Rated Output Capacity (kVA)	1.2		2.5	
	Rated Output Current (A)	1.6		3.3	
	Carrier Frequency (kHz) *1	2–15			
Input Rating	Rated Input Current (A)	1.9		3.8	
	Rated Voltage / Frequency	Three-phase 380–480 VAC (-15–10%), 50/60 Hz			
	Mains Input Voltage Range (V_{AC})	323–528			
	Mains Frequency Range (Hz)	47–63			
Cooling Method		Fan cooling			
EMC Filter		---	Built-in	---	Built-in
CE / RE Class *5		C1 / C2			
IP Rating		IP55[4]			
CDM Efficiency Class *2		IE2			

Frame		A			
Model: VFD _ _ _ MP43J ▯ NAA		4A7		6A2	
		N	F	N	F
Applicable Motor Output (kW)		2.2		3	
Applicable Motor Output (HP)		3		4	
Output Rating	Rated Output Capacity (kVA)	3.6		4.7	
	Output Rated Current (A)	4.7		6.2	
	Carrier Frequency (kHz) *1	2–15			
Input Rating	Rated Input Current (A)	5.4		7.2	
	Rated Voltage / Frequency	Three-phase 380–480 VAC (-15–10%), 50/60 Hz			
	Mains Input Voltage Range (V_{AC})	323–528			
	Mains Frequency Range (Hz)	47–63			
Cooling Method		Fan cooling*3			
EMC Filter		---	Built-in	---	Built-in
CE / RE Class *5		C1 / C2			
IP Rating		IP55[4]			
CDM Efficiency Class *2		IE2			

Frame		A			B
Model: VFD _ _ _ MP43J ☐ NAA		8A5		11A	
		N	F	N	F
Applicable Motor Output (kW)		4.0		5.5	
Applicable Motor Output (HP)		5.5		7.5	
Output Rating	Rated Output Capacity (kVA)	6.5		8.9	
	Output Rated Current (A)	8.5		11.7	
	Carrier Frequency (kHz) *1	2–15			
Input Rating	Rated Input Current (A)	9.9		13.8	
	Rated Voltage / Frequency	Three-phase 380–480 VAC (-15–10%), 50/60 Hz			
	Mains Input Voltage Range (V_{AC})	323–528			
	Mains Frequency Range (Hz)	47–63			
Cooling Method		Fan cooling*3			
EMC Filter		---	Built-in	---	Built-in
CE / RE Class *5		C1 / C2			
IP Rating		IP55[4]			
CDM Efficiency Class *2		IE2			

Frame		B	
Model: VFD _ _ _ MP43J ☐ NAA		15A	
		N	F
Applicable Motor Output (kW)		7.5	
Applicable Motor Output (HP)		10	
Output Rating	Rated Output Capacity (kVA)	11.9	
	Output Rated Current (A)	15.6	
	Carrier Frequency (kHz) *1	2–15	
Input Rating	Rated Input Current (A)	18.5	
	Rated Voltage / Frequency	Three-phase 380–480 VAC (-15–10%), 50/60 Hz	
	Mains Input Voltage Range (V_{AC})	323–528	
	Mains Frequency Range (Hz)	47–63	
Cooling Method		Fan cooling*3	
EMC Filter		---	Built-in
CE / RE Class *5		C1 / C2	
IP Rating		IP55[4]	
CDM Efficiency Class *2		IE2	

Frame		C							
Model: VFD _ _ _ MP43J □ NAA		24A		31A		39A		45A	
		N	F	N	F	N	F	N	F
Applicable Motor Output (kW)		11		15		18.5		22	
Applicable Motor Output (HP)		15		20		25		30	
Output Rating	Rated Output Capacity (kVA)	18.6		24.2		29.9		34.8	
	Output Rated Current (A)	24.4		31.8		39.2		45.6	
	Carrier Frequency (kHz) *1	2~15							
Input Rating	Rated Input Current (A)	29.5		38.9		48.5		56.5	
	Rated Voltage / Frequency	Three-phase 380–480 VAC (-15–10%), 50/60 Hz							
	Mains Input Voltage Range (V_{AC})	323~528							
	Mains Frequency Range (Hz)	47~63							
Cooling Method		Fan cooling*3							
EMC Filter		---	Built-in	---	Built-in	---	Built-in	---	Built-in
CE / RE Class *5		C2 / C2							
IP Rating		IP55*4							
CDM Efficiency Class *2		IE2							

Table 9-2

NOTE:

*1: The AC motor drive have to derating when the carrier frequency is higher than the default. Refer to section 9-4 for derating curve.

*2: Power drive system (Complete drive module · CDM) that IEC 61800-9-2 defines.

*3: Dissipate heat by using the fan of MKMP adapter plate.

*4: Follow the assembly instruction of MKMP adapter plate to reach the protection rating IP55.

*5: The carrier frequency is 4 kHz.

9-2 General Specifications

Control Characteristics of AC Motor Drive	Control Method	MP300: V/F, PMSVC MPD: PMSVC (00-11 = 2)
	Applicable Motor	IM (induction motor), PM control (IPM, SPM), MSI motor
	Output frequency (Hz)	MPD: 0.00–the maximum frequency which depends on the motor specification MP300: 0.00–599 Hz
	Starting Torque *1	120% / 3 Hz (Conditions: V/F and IM control, with rated current) 100% / (rated frequency of motor / 20) (Conditions: PMSVC and PM control, with rated current)
	Speed Control Range *1	1:50 (Conditions: V/F and IM control) 1 :20 (Conditions: PMSVC and PM control)
	Overload Capacity	120% of rated current can endure for 1 minute during every 5 minutes; 150% of rated current can endure for 3 seconds during every 30 seconds
	Frequency Setting Signal	0– +10V / 4 (0)–20 mA
	Main Functions	PID constant pressure control, multi-pump control, multi-master function, scheduled function, sleep function, DC preheating, flow estimation function, clean function
	Application Macro	Built-in user-defined application parameter groups.
Characteristic of motor*2	Rotation Direction	It's clockwise as viewed on the shaft end of the motor.
	Motor Duty Cycles	Continuous duty (S1)
	Motor Temperature Protection	KTY84-130 / PTC-130
	Insulation Classes	Class F
	Temperature Rise Classes	Class B
Protection Characteristics	Protection	Over-current, Over-voltage, Over-heating of AC motor drive, Over-heating of motor, Phase loss, Speed loss
	Pump Protection	Dry pump, High / Low water pressure, Pipe explosion, Cavitaion
Certifications		MP300: CE, RoHS, UL, KC MPD: CE, RoHS

Table 9-3

*1: Control accuracy may vary depending on the environment, application conditions. For more information, contact Delta or your local distributors.
*2: These specifications are suitable for MPD.

9-3 Environment for Operation, Storage and Transportation

<table>
<tr><td colspan="4">DO NOT expose the AC motor drive and the motor to a poor environment, such as one with direct sunlight, corrosive / inflammable gases, humidity, grease or excessive vibration.
The salt in the air must be less than 0.01 mg/cm^2 every year.</td></tr>
<tr><td rowspan="12">Environment</td><td>Installation Location</td><td colspan="2">IEC 60364-1/ IEC 60664-1 Pollution degree 2, Indoor use only.</td></tr>
<tr><td rowspan="4">Surrounding Temperature</td><td>Operation</td><td>-20–40 ºC
-20–50 ºC with derating</td></tr>
<tr><td>Storage</td><td>-40–70 ºC</td></tr>
<tr><td>Transportation</td><td>-20–70 ºC</td></tr>
<tr><td colspan="2">Non-condensing, non-freezing</td></tr>
<tr><td rowspan="3">Rated Humidity</td><td>Operation</td><td>Maximum 90 %</td></tr>
<tr><td>Storage / Transportation</td><td>Maximum 95 %</td></tr>
<tr><td colspan="2">No water condensation</td></tr>
<tr><td rowspan="2">Air Pressure</td><td>Operation</td><td>86–106 kPa</td></tr>
<tr><td>Storage / Transportation</td><td>70–106 kPa</td></tr>
<tr><td>Altitude</td><td colspan="2"><1000 m (For altitudes > 1000 m, derate to use it.)</td></tr>
<tr><td rowspan="2">Package Drop</td><td>Storage</td><td colspan="2" rowspan="2">ISTA procedure 1A (according to weight) IEC 60068-2-31</td></tr>
<tr><td>Transportation</td></tr>
<tr><td>Vibration</td><td>Operation / Non operation</td><td colspan="2">IEC 60721 3M6 (2-9Hz: 7mm, 9-200Hz: 2G)</td></tr>
<tr><td>Impact</td><td>Operation / Non operation</td><td colspan="2">IEC 60721 3M6 (25g / 6ms)</td></tr>
</table>

Table 9-4

9-4 Derating for Ambient Temperature, Altitude and Carrier Frequency

9-4-1 Derating Curve for Ambient Temperature and Altitude

Ambient temperature	
Protection Level	NEMA1 / UL Type 1
Operating Environment	If the AC motor drive operates at the rated current, the ambient temperature needs to be between -20–40ºC. If the temperature is above 40ºC, decrease 2.5% of the rated current for every 1ºC increase in temperature. The maximum allowable temperature is 50ºC.
Derating Curve	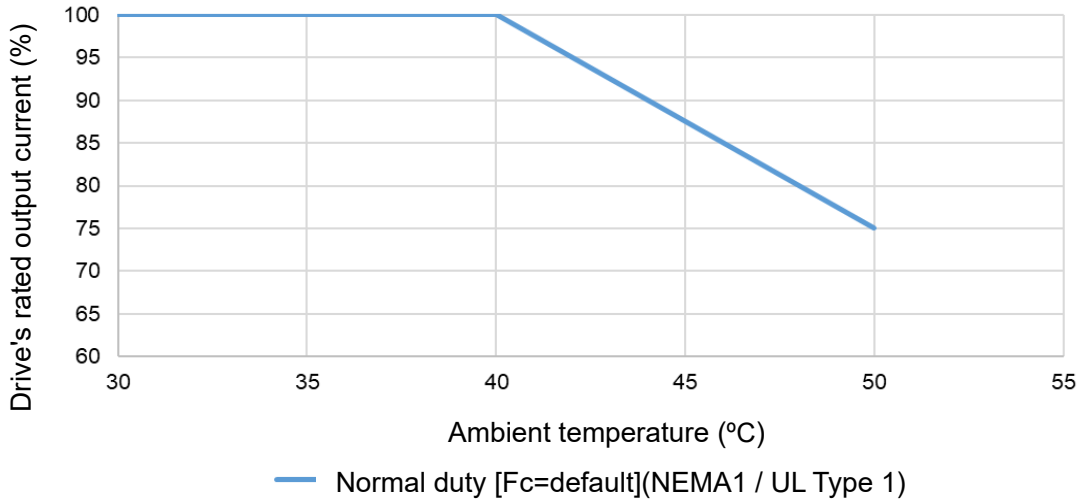 Figure 9-1
Altitude	
Protection Level	High Altitude
Operating Environment	If the AC motor drive is installed at an altitude of 0–1000 m, follow normal operation restrictions. For altitudes of 1000–2000 m, decrease the drive's rated current by 1% or lower the temperature by 0.5ºC for every 100 m increase in altitude. The maximum altitude for corner grounded is 2000 m. If installing at an altitude higher than 2000 m is required, contact Delta for more information.
Derating Curve	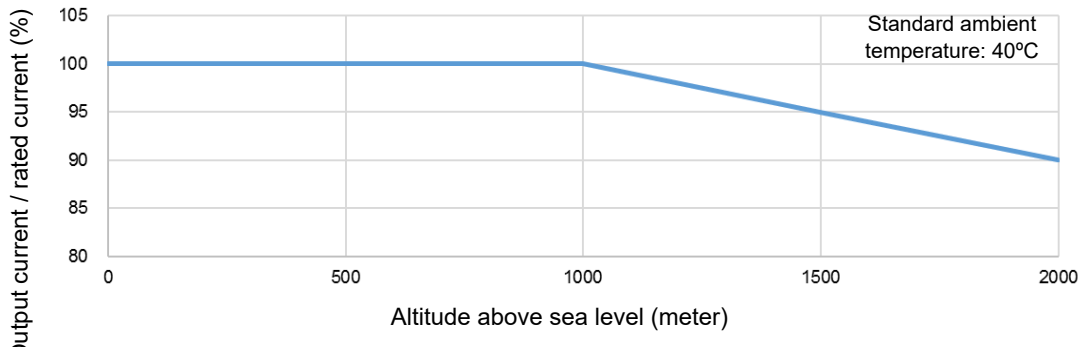 Figure 9-2

Table 9-5

The rated output current derating

In normal duty, carrier frequencies are defaults.

Ambient temperature (Ta) / 100% Load Fc (kHz)	30°C	40°C	50°C
Default (%)	100	100	75

Different altitudes above sea level:

Altitude above sea level (meter)	0	1000	1500	2000
Output current / rated current (%)	100	100	95	90

Table 9-6

9-4-2 Derating Curve for Carrier Frequency

- Phase modulation mode (Pr.11-41 = 0)

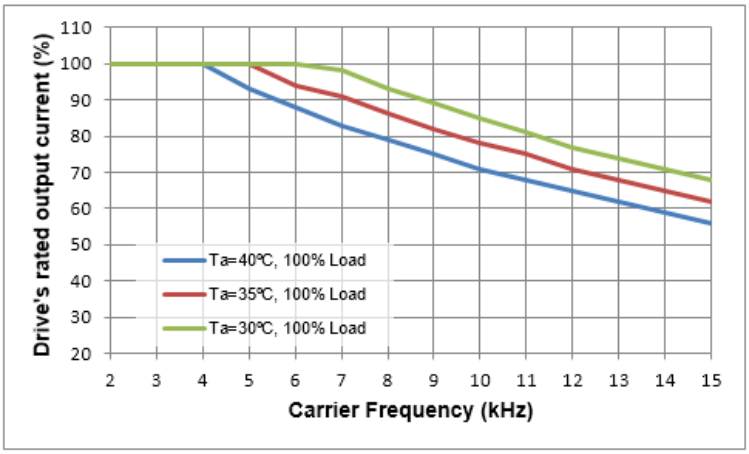

Figure 9-3

The rated output current of DPWM in different carrier frequencies

Fc (kHz) / Ambient temperature (Ta) 100% Load	2	3	4	5	6	7	8	9	10	11	12	13	14	15
40°C	100	100	100	93	88	83	79	75	71	68	65	62	59	56
35°C	100	100	100	100	94	91	86	82	78	75	71	68	65	62
30°C	100	100	100	100	100	98	93	89	85	81	77	74	71	68

Table 9-7

- Space vector modulation mode (Pr.11-41 = 2)

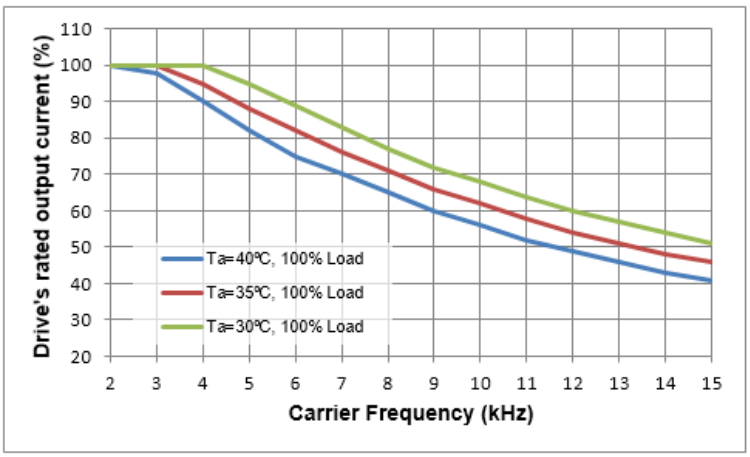

Figure 9-4

The rated output current of SVPWM in different carrier frequencies (unit: %)

Fc (kHz) / Ambient temperature (Ta) 100% Load	2	3	4	5	6	7	8	9	10	11	12	13	14	15
40°C	100	98	90	82	75	70	65	60	56	52	49	46	43	41
35°C	100	100	95	88	82	76	71	66	62	58	54	51	48	46
30°C	100	100	100	95	89	83	77	72	68	64	60	57	54	51

Table 9-8

9-5 Specifications of Motor

9-5-1 Summary of properties (0.75~7.5 kW-3000 rpm)

Models	Rated power (kW)	Frame (mm)	Rated speed (rpm)	Rated current (A)	Rated torque (Nm)	Maximum torque (Nm)
MSI75B-30CDXS2_1AP	0.75	80-1	3000	1.5	2.3	3.5
MSI15C-30CDXS2_1AP	1.5	80-2		3.1	4.7	7.1
MSI22C-30CDXS2_1AP	2.2	80-2		4.4	7	10.5
MSI30C-30CDXS2_1AP	3	90		5.8	9.5	14.3
MSI40C-30CDXS2_1AP	4	90		8	12.7	19.1
MSI55C-30CDXS2_1AP	5.5	100-1		11	17.5	26.3
MSI55C-30CDXS2_FAP	5.5	100-2		11	17.5	26.3
MSI75C-30CDXS2_1AP	7.5	100-2		14.7	23.8	35.7

Models	Maximum rotor speed (rpm)	Moment of inertia (kg-m^2)	Power factor (%)	Full load efficiency (%)	3/4 load efficiency (%)	2/4 load efficiency (%)
MSI75B-30CDXS2_1AP	3600	$1.16*10^{-3}$	0.85	86.3	84.6	83.5
MSI15C-30CDXS2_1AP		$1.56*10^{-3}$	0.85	88.9	88.0	85.4
MSI22C-30CDXS2_1AP		$1.76*10^{-3}$	0.85	90.2	91.4	89.6
MSI30C-30CDXS2_1AP		$3.03*10^{-3}$	0.85	91.1	92.2	90.6
MSI40C-30CDXS2_1AP		$3.36*10^{-3}$	0.86	91.8	92.7	91.2
MSI55C-30CDXS2_1AP		$5.83*10^{-3}$	0.87	92.6	93.2	92.0
MSI55C-30CDXS2_FAP		$5.83*10^{-3}$	0.87	92.6	93.2	92.0
MSI75C-30CDXS2_1AP		$7.53*10^{-3}$	0.87	93.3	93.9	93.2

Table 9-9

9-5-2 Specification of Bearing

Models	Front bearing	Rear bearing
MSI75B-30CDXS2_1AP	6305 ZZ/C3	6204 ZZ/C3
MSI15C-30CDXS2_1AP		
MSI22C-30CDXS2_1AP		
MSI30C-30CDXS2_1AP	6306 ZZ/C3	6205 ZZ/C3
MSI40C-30CDXS2_1AP		
MSI55C-30CDXS2_1AP	6308 ZZ/C3	6206 ZZ/C3
MSI55C-30CDXS2_FAP		
MSI75C-30CDXS2_1AP		

Table 9-10

NOTE: The positions mark as "_" mean the installation ways: B (IM B5 / IM V1), D (IM B14 / IM V18)

9-5-3 TN Curve

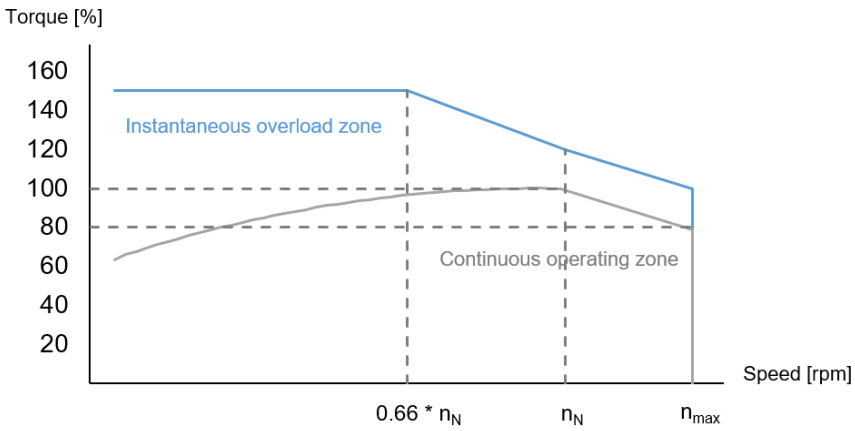

0.66*n_N	n_N	n_{max}
2000rpm	3000rpm	3800rpm

Chapter 10 Digital Keypad

10-1 Appearance of Keypad

10-2 The Backlight of the Keypad Panel

10-3 Descriptions of Keypad Functions

10-4 Information Displayed on the Panel

10-5 Keypad Operation Process

10-6 Reference Table for the 16-segment Digital Keypad LED Display

10-1 Appearance of Keypad

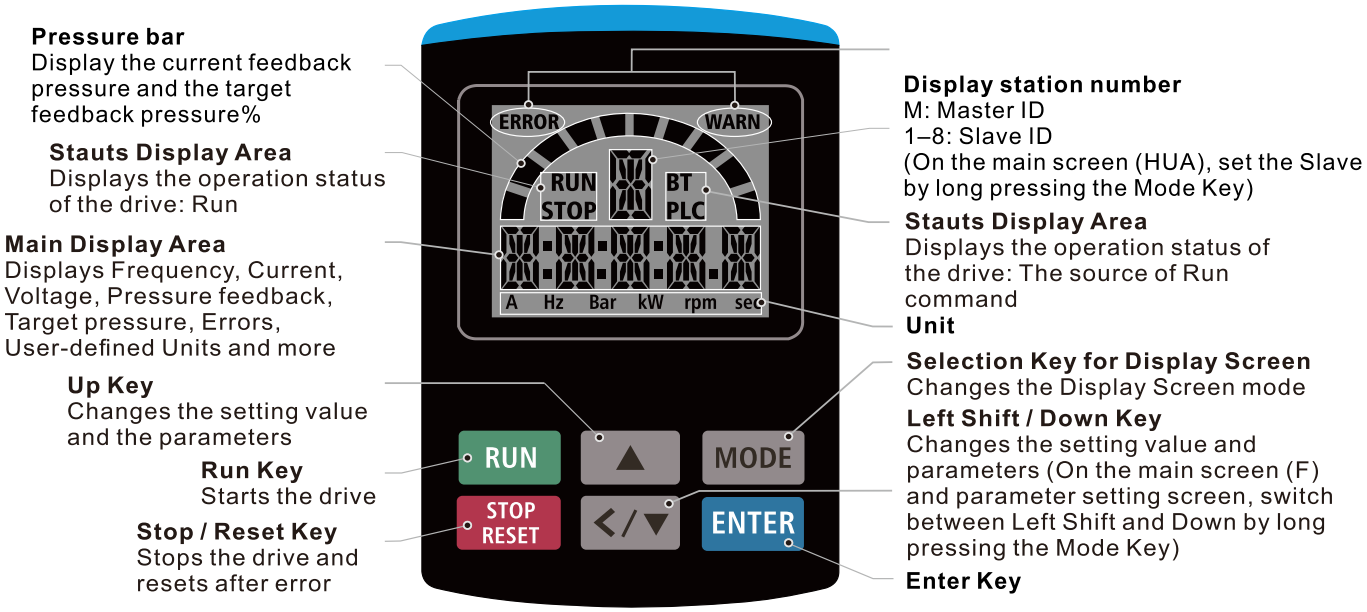

10-2 The Backlight of the Keypad Panel

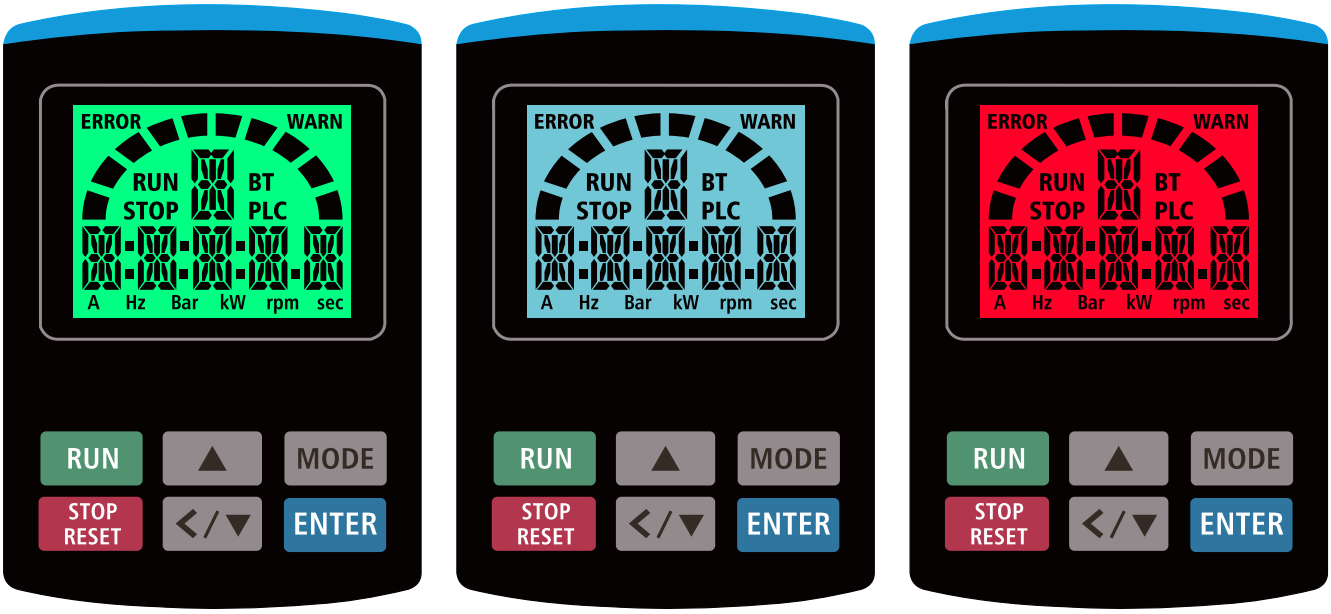

Green light: Standby

Blue light: Run

Red light: Alarm

10-3 Descriptions of Keypad Functions

Display	Descriptions
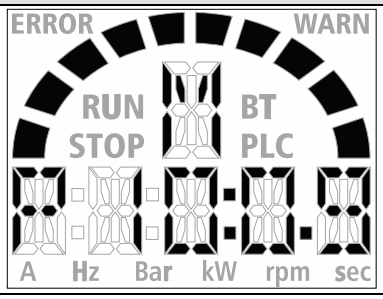	Display the target pressure and the feedback pressure, and the pressure bar changes along with the percentage.
	Display station number. Master ID: M; Slave ID: 2–8
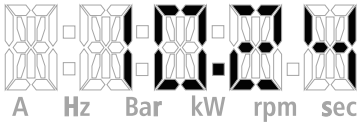	Display the date.
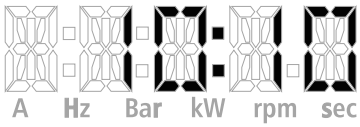	Display the time.
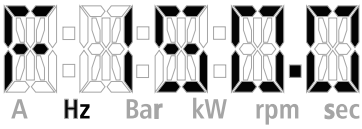	Display the present frequency setting for the drive.
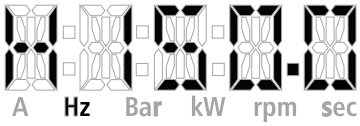	Display the actual output frequency to the motor.
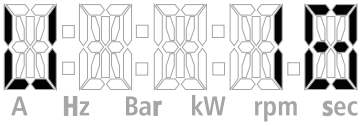	Display the user-defined output of a physical quantity. This example uses Pr.00-04 = 30 (user-defined output).
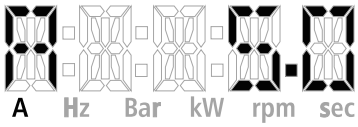	Display the load current.
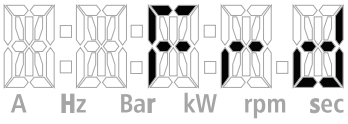	Forward command
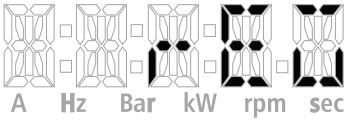	Reverse command
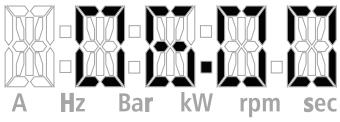	Display a parameter item.
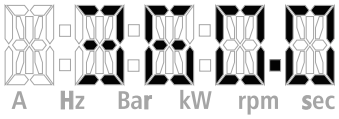	Display a parameter value.
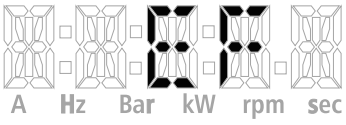	Display an external fault.

Display	Descriptions
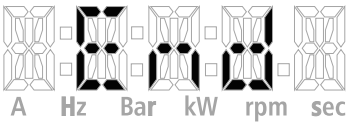	Display “End” for approximately one second if the data has been accepted and automatically stored in the register.
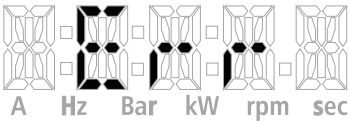	Display if the setting data is not accepted or data value exceeds the allowed range.

10-4 Information Displayed on the Panel

1. Operation status: RUN / STOP

   The RUN LED and the STOP LED light up according to the operation status of AC motor drive.

   - The RUN LED lights up: It’s in operation.
   - The STOP LED lights up: It’s not in operation.

2. Source of the RUN command: PLC / BT

   The BT LED and the PLC LED light up according to the operation source of AC motor drive.

   - BT LED: The BT LED lights up when the the AC motor drive and the bluetooth card are connected and they can communicate normally; the BT LED flashes when using mobile app to link with the bluetooth card.
   - PLC LED: The PLC LED lights up when using PLC as RUN command. Sets the corresponding display according to the descriptions below.

     PLC0: Not using PLC, the PLC LED does not light up.

     PLC1: Switch ON PLC and it can operate, the PLC LED flashes.

     PLC2: Switch ON PLC and it cannot operate, the PLC LED lights up.

3. Alarm: ERROR / WARN

   When there is any fault or warning of AC motor drive, the ERROR / WARN LED lights up, and displays the fault code in main display area, the backlight becomes red at the same time.

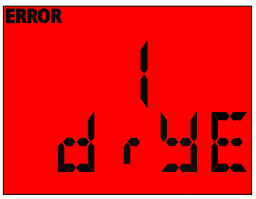

Fault-ERROR LED lights up

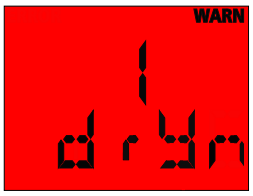

Warn-WARN LED lights up

4. Pressure bar:

   Displays the target pressure divided by the feedback pressure as a percentage, one square is 10%, increases from left to right, and rounds it to the nearest whole number. Refer to the schematic diagrams below.

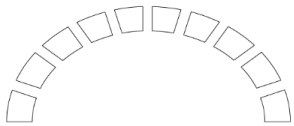

0%

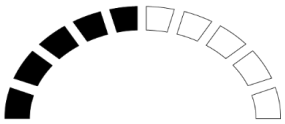

50%

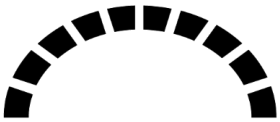

100%

Example 1: The target pressure can be divided with no remainder, the pressure bar displays the calculation directly.

- The target pressure is 10 bar, the present pressure is 5:
  10 ÷ 10 = 1, 5 ÷ 1 = 5 (squares)

Example 2: The target pressure cannot be divided with no remainder, the pressure bar displays the calculation which rounds to the nearest whole number.

- The target pressure is 15 bar, the present pressure is 8:
  15 ÷ 10 = 1.5, 8 ÷ 1.5 = 5.3 (squares), rounds it down to 5 (squares)
- The target pressure is 13 bar, the present pressure is 6:
  13 ÷ 10 = 1.3, 6 ÷ 1.3 = 4.6 (squares), rounds it down to 5 (squares)

5. Unit:

When select parameters, if the units can be displayed on keypad includes the unit of the parameter (such as A, Hz, Bar, kW, rpm, sec), then the LED of this unit lights up. If the unit of the parameter isn't included in the units mentioned above, then the unit does not display.

Example 1: Selects Pr.01-00 (Motor 1 maximum operation frequency), the setting range is 0.00–180.00 Hz.

Hz is the unit can be displayed on keypad, the display is as follows:

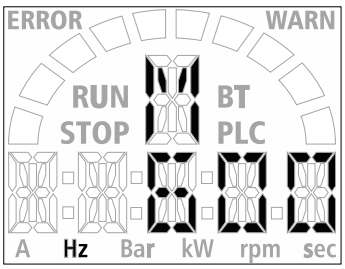

Example 2: Selects Pr.03-00 (AI1 analog input selection), the setting value is 5, the display is as follows:

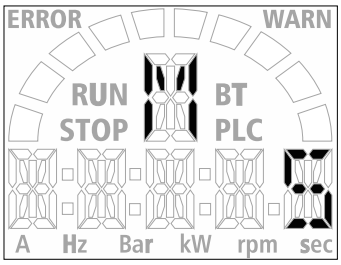

10-5 Keypad Operation Process

1. Main Page Selection

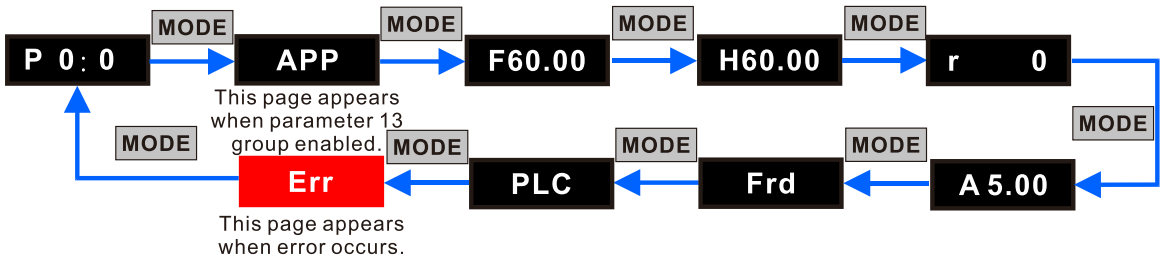

- Parameter setting

Note: In the parameter setting mode, you can press MODE to return to the previous layer.

- Data adjustment

- Rotation direction setting

- Station number setting

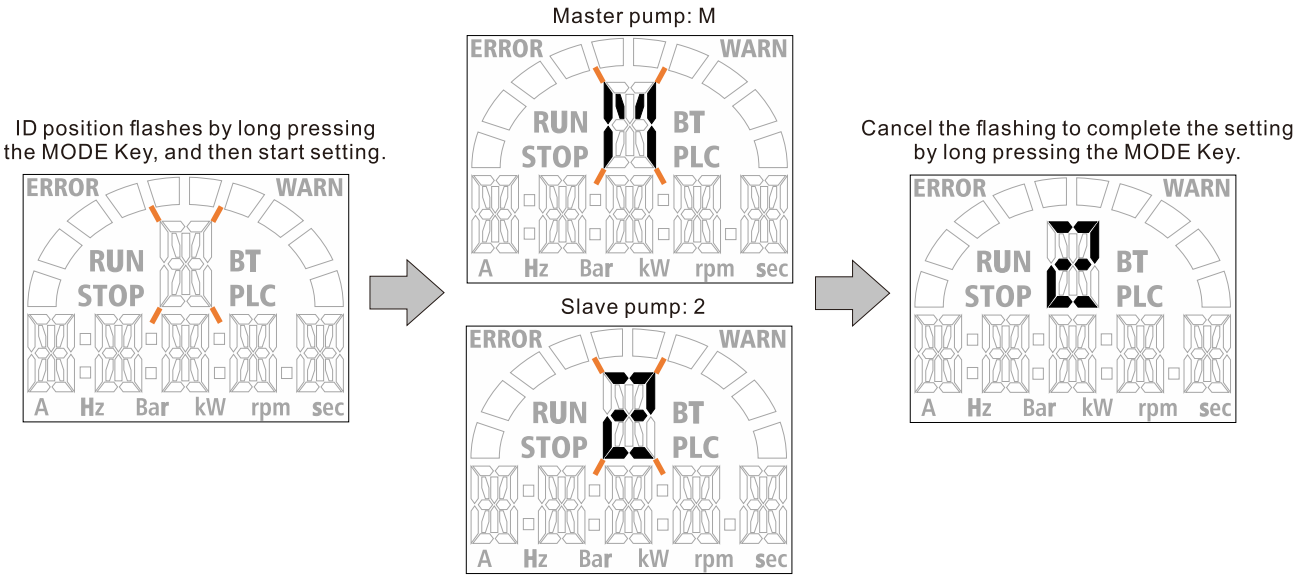

2. F Page (Frequency command setting page)

- Setting method

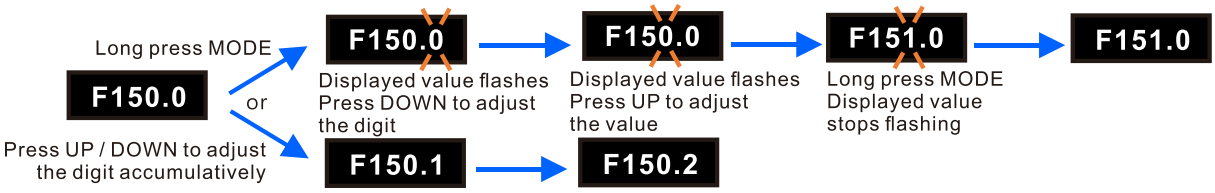

- Normal mode

  When the frequency exceeds the maximum operation frequency, the displayed value is locked at the upper value (e.g. Set Pr.01-00 = 150.00 Hz, the value is locked at 150.0).

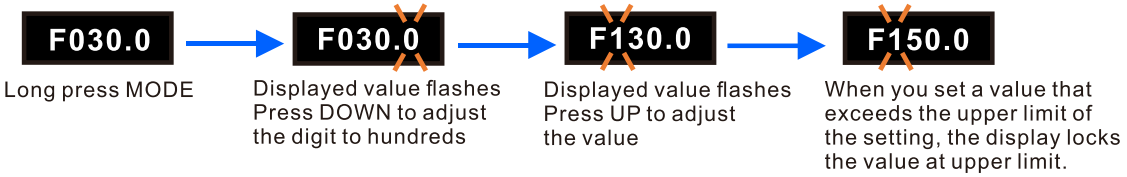

3. Application Macro Selection Page

- Users can set common parameters quickly in this page. Use Pr.13-01–13-50 to define the common parameters. Set Pr.13-00 = 1, select APP page and enter User-defined page to set values for parameters.
- Once enabled, the Application Marco Selection page displays “APP”. If Pr.13-00 = 0, the APP page does not display.
- The description of Pr.13-00 setting is as follows:

  Pr.13-00 = 0 specifies the application selection is inactive and does not show on the display.

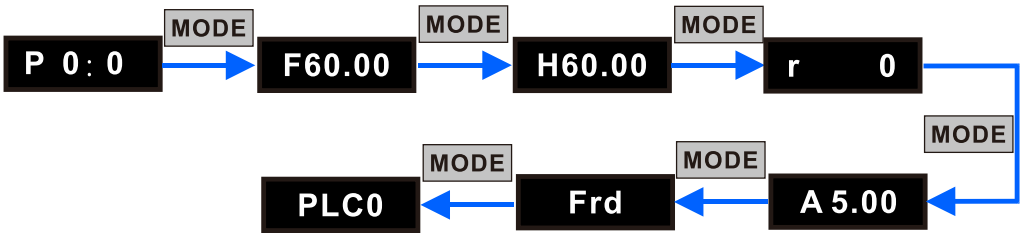

Pr.13-00 = 1 specifies a user-defined application, and the keypad displays “USEr”.

If Pr.13-00 = 1 and you do not set any parameters for Pr.13-01–Pr.13-50, you cannot enter the sub-layer of the USEr page.

Follow the process below to set the user-defined application macro parameters (Pr.13-00=1).

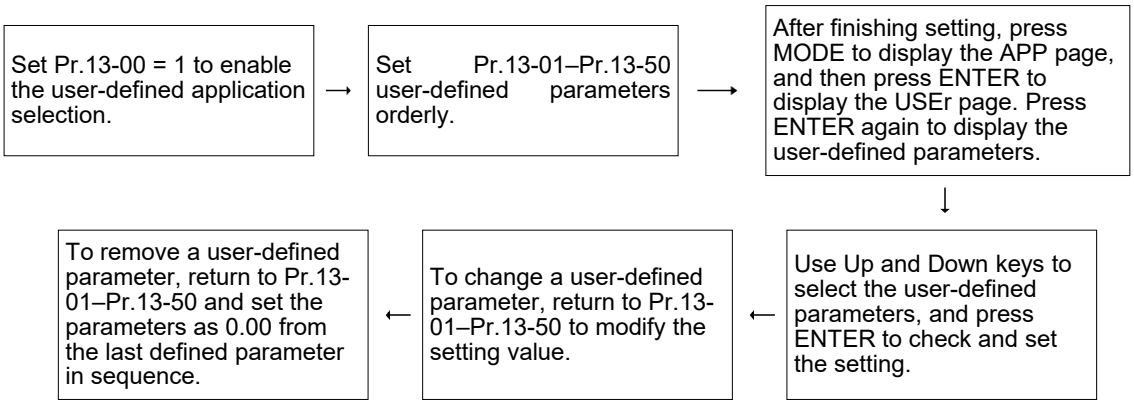

(1) Go to Parameter Group 13 to set the application macro functions. The application macro function is enabled when Pr.13-00 ≠ 0.

(2) Set Pr.13-00 = 1 to enable the user-defined applications.

(3) Use Pr.13-01–Pr.13-50 to set the user-defined parameters orderly according to your requirement. The default setting 0-00 means there is no user-defined parameter. Press ENTER to set the corresponding parameters for Pr.13-01– Pr.13-50.

(4) The setting method of user-defined parameters is the same as that for non-user-defined parameters. You can use Up and Down keys or left shift key to speed up the settings.

Note: You must set Pr.13-01, Pr.13-02, Pr.13-03, ...orderly, otherwise the display shows "Err".

(5) If you want to change parameters which have been set before, you have to go back to Pr.13-01–13-50.

(6) If you want to remove unused parameters which have been set before, you have to remove the parameters from the last one.

For example, if there are five user-defined parameters (Pr.13-01, 13-02…13-05), to remove Pr.13-02, you must remove Pr.13-05 first, then Pr.13-04, then Pr.13-03, and then Pr.13-02.

(7) After finishing the setting, return to the APP page, and then press ENTER. The display shows "USEr". After you press ENTER again, the parameter you just set appears.

4. Parameter setting

(1) Unsigned parameters

(Parameter setting range ≥ 0; e.g. Pr.01-00)

A. Without using the left shift key: Use Up and Left / Down key to select and adjust the parameters. Then, press ENTER to start the parameter settings.

B. Using the left shift key: Long press MODE for two seconds until the last digit of the parameter value starts to blink. Increase the value by pressing the Up key. The value goes back to 0 after 9.

C. Press left / down key to shift the blinking cursor one digit to the left, and increase the value by pressing the Up key.

D. After you finish setting the parameter, the left shift key function is not disabled automatically until you disable it manually by pressing MODE for two seconds.

E. The upper limit for Pr.01-00 is 180.00. If you set a value greater than 180.00, "Err" appears after you press ENTER, and then the keypad shows the upper limit (180.0) for a second to remind you of the incorrect setting. The setting value remains as the original set value (default is 150.00, which means the setting value is not changed), and the cursor returns to the last digit.

(2) Minus-signed parameter setting status 1

(The parameter value is one decimal place or no decimal point, the range can be < 0; e.g. Pr.03-03)

A. Without using the left shift key: Use Up and Left/Down key to select and adjust the parameters. Then, press ENTER to start the parameter settings.

B. Using the left shift key: Long press MODE for two seconds until the last digit of the parameter value starts to blink. Increase the value by pressing the Up key. The value goes back to 0 after 9.

C. Press the left / down key to shift the blinking cursor one digit to the left, and increase the value by pressing the Up key. When you shift to the first digit and press the Up key, the digit “0” changes to “-” (minus).

D. After you finish setting the parameter, the left shift key function is not disabled automatically until you disable it manually by pressing MODE for two seconds.

E. For parameter values with three digits and one decimal place (Pr.03-03, -100–100.00%), the display only shows three digits.

Example: The default of Pr.03-03 is 0.0. Long pressing MODE for two seconds enables the left shift function. The process for pressing the Left / Down key shows as follows:

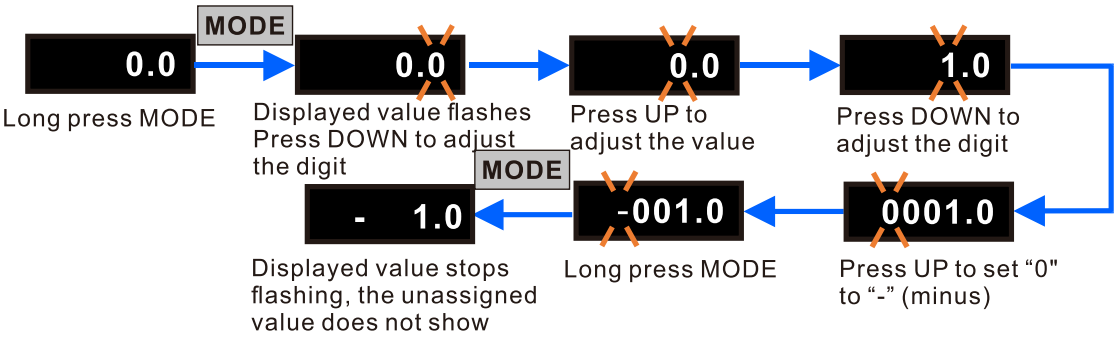

(3) If the displayed value is over four digits and has directing character, displays a superscript point on keypad to remind the value is five digits.

Example:

Set Pr.00-04 = 31, Pr.00-05 = 100, and the present output frequency = 150.00 Hz, the display should show 15000 (= 150 x 100), but because of digit limitation, it shows K15•00.

10-6 Reference Table for the 16-segment Digital Keypad LED Display

Number	0	1	2	3	4	5	6	7	8	9
16-segment display	0	1	2	3	4	5	6	7	8	9
Letter	A	a	B	b	C	c	D	d	E	e
16-segment display	A	–	B	b	C	c	D	d	E	e
Letter	F	f	G	g	H	h	I	i	J	j
16-segment display	F	f	G	–	H	h	I	i	J	j
Letter	K	k	L	l	M	m	N	n	O	o
16-segment display	K	–	L	–	M	–	N	n	O	o
Letter	P	p	Q	q	R	r	S	s	T	t
16-segment display	P	–	Q	q	R	r	S	–	T	t
Letter	U	u	V	v	W	w	X	x	Y	y
16-segment display	U	u	V	v	W	w	X	–	Y	–
Letter	Z	z								
16-segment display	Z	–								

Chapter 11 Summary of Parameter Settings

00 Drive Parameters

01 Basic Parameters

02 Digital Input / Output Parameters

03 Analog Input / Output Parameters

04 Multi-Step Speed Parameters

05 Motor Parameters

06 Protection Parameters (1)

07 Special Parameters

08 High-function PID Parameters

09 Communication Parameters

10 Speed Feedback Control Parameters

11 Advanced Parameters

12 Function Parameters

13 Macro / User-defined Macro

14 Protection Parameters (2)

This chapter provides a summary of parameters (Pr.) setting ranges and defaults You can set, change, and reset parameters through the digital keypad.

NOTE:

1. ✓: You can set this parameter during operation.
2. Refer to chapter 12 for the details of parameters.

00 Drive Parameters

	Pr.	Parameter Name	Settings	Default
	00-00	AC Motor Drive Identity Code	404: 460 V, 3 Phase, 1 HP 405: 460 V, 3 Phase, 2 HP 406: 460 V, 3 Phase, 3 HP 482: 460V, 3 Phase, 4 HP 483: 460 V, 3 Phase, 5.5 HP 408: 460 V, 3 Phase, 7.5 HP 409: 460 V, 3 Phase, 10 HP 410: 460 V, 3 Phase, 15 HP 411: 460 V, 3 Phase, 20 HP 412: 460 V, 3 Phase, 25 HP 413: 460 V, 3 Phase, 30 HP	Read only
	00-01	AC Motor Drive Rated Current Display	Display by models	Read only
	00-02	Parameter Reset	0: No function 1: Write protection for parameters 5: Return kWh displays to 0 6: Reset PLC 8: Keypad does not respond 9: Reset all parameters to defaults (go back to IM V/F control, base frequency is 50 Hz, carrier frequency is 15 kHz) 10: Reset all parameters to defaults (go back to PMSVC control, base frequency is 150 Hz, carrier frequency is 4 kHz) 12: Reset all parameters to defaults (go back to PMSVC control, base frequency is 150 Hz, carrier frequency is 4 kHz, and preserve the user-defined parameter values Pr.13-01–Pr.13-50) 14: Reset all parameters to defaults (retain the parameter settings related to the PMSVC control)	0
✓	00-03	Start-up Display	0: F (frequency command) 1: H (output frequency) 2: U (user-defined) see Pr.00-04 3: A (output current) 4: P (display the setting value and the feedback of PID control)	4
✓	00-04	Content of Multi-function Display (User-Defined)	0: Display output current from the drive to the motor (A) (Unit: Amp) 1: Display counter value (c) (Unit: CNT) 2: Display the drive's actual output frequency (H.) (Unit: Hz)	7

	Pr.	Parameter Name	Settings	Default
			3: Display the drive's DC bus voltage (v) (Unit: V_{DC}) 4: Display the drive's output voltage (E) (Unit: V_{AC}) 5: Display the drive's output power angle (n) (Unit: deg) 6: Display the drive's output power (P) (Unit: kW) 7: Display the motor speed (r) (Unit: rpm) 11: Display AI1 analog input terminal signal (1.) (Unit: %) 12: Display AI2 analog input terminal signal (2.) (Unit: %) 14: Display the drive's IGBT temperature (i.) (Unit: ºC) 15: Display the drive's internal temperature (c.) (Unit: ºC) 16: The digital input status (ON / OFF) (i) 17: The digital output status (ON / OFF) (o) 18: Display multi-step speed (S) 19: The corresponding CPU digital input pin status (d) 20: The corresponding CPU digital output pin status (0.) 25: Overload count (0.00–100.00%) (o.) (Unit: %) 26: Ground Fault GFF (G.) (Unit: %) 27: DC bus voltage ripple (r.) (Unit: V_{DC}) 28: Display PLC register D1043 data (C) 30: Display the output of User-defined (U) 31: Display Pr.00-05 user gain (K) 36: Present operating carrier frequency of the drive (J.) (Unit: Hz) 38: AC motor drive status (6.) 41: kWh display (J) (Unit: kWh) 49: Display the motor's temperature (M) (PTC-130, KTY84-130) 51: PMSVC torque offset (T.) 65: Accumulated motor operation time (days) (r.) 112: Estimated flow rate (F) (Unit: m^3/hr) 113: Display the inlet pressure (I) (Unit: according to Pr.00-38 setting) 114: Display the outlet pressure (O) (Unit: according to Pr.00-25 setting) 115: Cavitation detection index (V)	
✓	00-05	Coefficient Gain in Actual Output Frequency	0.00–160.00	1.00
	00-06	Firmware Version	Read only	Read only
✓	00-07	Parameter Protection Password Input	0–65535 0–4 (the number of password attempts)	0

	Pr.	Parameter Name	Settings	Default
✓	00-08	Parameter Protection Password Setting	0–65535 0: No password protection or password is entered correctly (Pr.00-07) 1: Password has been set	0
	00-11	Speed Control Mode	0: IMVF (IM V/F control) 2: PM SVC (PM space vector control)	If Pr.00-02 = 9, then the default is 0; if Pr.00-02 = 10 or 12, then the default is 2
	00-17	Carrier frequency	2–15 kHz	15
	00-19	PLC Command Mask	Display value bit 0: Control command is forced by PLC control bit 1: Frequency command is forced by PLC control	Read only
✓	00-20	Master frequency command source (AUTO, REMOTE)	0: Digital keypad 1: RS-485 communication (COM1) 2: External analog input (Refer to Pr.03-00) 3: External UP / DOWN terminal (multi-function input terminals) 8: Communication card (does not include CANopen card) NOTE: HOA (Hand-Off-Auto) function is valid only when this parameter uses with MO function setting 42 and 56.	0
✓	00-21	Operation command source (AUTO, REMOTE)	0: Digital keypad 1: External terminals 2: RS-485 communication (COM1) 5: Communication card (does not include CANopen card) NOTE: HOA (Hand-Off-Auto) function is valid only when this parameter uses with MO function setting 42 and 56.	0
✓	00-22	Stop method	0: Ramp to stop 1: Coast to stop	0
✓	00-23	Motor direction control	0: Enable forward / reverse 1: Disable reverse 2: Disable forward	0
	00-24	Digital Operator (Keypad) Frequency Command Memory	Read only	Read only
✓	00-25	User-defined Characteristics 1	bit 0–3: user-defined decimal places 0000h-0000b: no decimal place 0001h-0001b: one decimal place 0002h-0010b: two decimal places 0003h-0011b: three decimal places bit 4–15: user-defined unit 000xh: Hz 001xh: rpm	353

Pr.	Parameter Name	Settings	Default
		002xh: % 003xh: kg/cm^2 004xh: m/s 005xh: kW 006xh: HP 007xh: ppm 008xh: 1/m 009xh: kg/s 00Axh: kg/m 00Bxh: kg/h 00Cxh: lb/s 00Dxh: lb/m 00Exh: lb/h 00Fxh: ft/s 010xh: ft/m 011xh: m 012xh: ft 013xh: degC 014xh: degF 015xh: mbar 016xh: bar 017xh: Pa 018xh: kPa 019xh: mWG 01Axh: inWG 01Bxh: ftWG 01Cxh: psi 01Dxh: atm 01Exh: L/s 01Fxh: L/m 020xh: L/h 021xh: m3/s 022xh: m3/h 023xh: GPM 024xh: CFM xxxxh: Hz	
00-26	Maximum User-defined Value 1	0: No Function 0–99 (when Pr.00-25 is set to no decimal place) 0.0–99.9 (when Pr.00-25 is set to one decimal place) 0.00–99.99 (when Pr.00-25 is set to two decimal places) 0.000–30.000 (when Pr.00-25 is set to three decimal places)	0
00-27	User-defined Value 1	Read only	Read only

	Pr.	Parameter Name	Settings	Default
	00-29	LOCAL / REMOTE Selection	0: Standard HOA function 1: When switching between local and remote, the drive stops. 2: When switching between local and remote, the drive runs with REMOTE settings for frequency and operating status. 3: When switching between local and remote, the drive runs with LOCAL settings for frequency and operating status. 4: When switching between local and remote, the drive runs with LOCAL settings when switched to Local and runs with REMOTE settings when switched to Remote for frequency and operating status.	0
✓	00-30	Master frequency command source (HAND, LOCAL)	0: Digital keypad 1: RS-485 communication input 2: External analog input (Refer to Pr.03-00) 3: External UP / DOWN terminal (multi-function input terminals) 8: Communication card (does not include CANopen card) NOTE: HOA (Hand-Off-Auto) function is valid only when you use with MO function setting 41 and 56.	0
✓	00-31	Operation Command Source (HAND, LOCAL)	0: Digital keypad 1: External terminals 2: RS-485 communication input 5: Communication card (does not include CANopen card) NOTE: HOA (Hand-Off-Auto) function is valid only when you use with MO function setting 41 and 56.	0
✓	00-32	Digital Keypad STOP Function	0: STOP key disabled 1: STOP key enabled	0
	00-33	RPWM mode	0: Disable 1: RPWM mode 1 2: RPWM mode 2 3: RPWM mode 3	0
	00-34	RPWM carrier frequency variation	0.0–4.0 kHz	0.0
	00-38	User-defined Characteristics 2	bit 0–3: user-defined decimal places 0000h-0000b: no decimal place 0001h-0001b: one decimal place 0002h-0010b: two decimal places 0003h-0011b: three decimal places bit 4–15: user-defined unit 003xh: kg/cm^2 015xh: mbar 016xh: bar 017xh: Pa 018xh: kPa	353

	Pr.	Parameter Name	Settings	Default
			019xh: mWG 01Axh: inWG 01Bxh: ftWG 01Cxh: psi 01Dxh: atm	
	00-39	Maximum User-defined Value 2	0: No Function 0–65535 (when Pr.00-25 is set to no decimal place) 0.0–6553.5 (when Pr.00-25 is set to one decimal place) 0.00–655.35 (when Pr.00-25 is set to two decimal places) 0.000–65.535 (when Pr.00-25 is set to three decimal places)	0
✓	00-47	Motor Running Direction Setting	0: Motor does not change running direction 1: Motor changes running direction	0
✓	00-48	Display Filter Time (Current)	0.001–65.535 sec.	0.100
✓	00-49	Display Filter Time (Keypad)	0.001–65.535 sec.	0.100
	00-50	Software Version (Date)	Read only	Read only
	00-59	Accumulated Motor Operation Time (Minutes)	0–1439	0
	00-60	Accumulated Motor Operation Time (Days)	0–65535	0
	00-61	PLC Software Version	Read only	Read only
	00-62	PLC Software Release Date	Read only	Read only

01 Basic Parameters

	Pr.	Parameter Name	Settings	Default
	01-00	Motor 1 Maximum Operation Frequency	0.00–599.00 Hz	150.00
	01-01	Motor 1 Rated / Base Frequency	0.00–599.00 Hz	150.00
	01-02	Motor 1 Rated / Base Voltage	0.0–510.0 V	380.0
	01-03	Motor 1 Mid-Point Frequency 1	0.00–599.00 Hz	3.00
✓	01-04	Motor 1 Mid-Point Voltage 1	0.0–480.0 V	22.0
	01-05	Motor 1 Mid-Point Frequency 2	0.00–599.00 Hz	1.50
✓	01-06	Motor 1 Mid-Point Voltage 2	0.0–480.0 V	10.0
	01-07	Motor 1 Minimum Output Frequency	0.00–599.00 Hz	0.50
✓	01-08	Motor 1 Minimum Output Voltage	0.0~480.0 V	2.0
	01-09	Start-up Frequency	0.00–599.00 Hz	0.50
✓	01-10	Output Frequency Upper Limit	0.00–599.00 Hz	599.00
✓	01-11	Output Frequency Lower Limit	0.00–Pr.01-10 Hz	0.00
✓	01-12	Acceleration Time 1	Pr.01-45 = 0: 0.00–600.00 sec. Pr.01-45 = 1: 0.0–6000.0 sec.	10.00 10.0
✓	01-13	Deceleration Time 1	Pr.01-45 = 0: 0.00–600.00 sec. Pr.01-45 = 1: 0.0–6000.0 sec.	10.00 10.0
✓	01-14	Acceleration Time 2	Pr.01-45 = 0: 0.00–600.00 sec. Pr.01-45 = 1: 0.0–6000.0 sec.	10.00 10.0
✓	01-15	Deceleration Time 2	Pr.01-45 = 0: 0.00–600.00 sec. Pr.01-45 = 1: 0.0–6000.0 sec.	10.00 10.0
✓	01-16	Acceleration Time 3	Pr.01-45 = 0: 0.00–600.00 sec. Pr.01-45 = 1: 0.0–6000.0 sec.	10.00 10.0
✓	01-17	Deceleration Time 3	Pr.01-45 = 0: 0.00–600.00 sec. Pr.01-45 = 1: 0.0–6000.0 sec.	10.00 10.0
✓	01-18	Acceleration Time 4	Pr.01-45 = 0: 0.00–600.00 sec. Pr.01-45 = 1: 0.0–6000.0 sec.	10.00 10.0
✓	01-19	Deceleration Time 4	Pr.01-45 = 0: 0.00–600.00 sec. Pr.01-45 = 1: 0.0–6000.0 sec.	10.00 10.0
✓	01-20	JOG Acceleration Time	Pr.01-45 = 0: 0.00–600.00 sec. Pr.01-45 = 1: 0.0–6000.0 sec.	10.00 10.0
✓	01-21	JOG Deceleration Time	Pr.01-45 = 0: 0.00–600.00 sec. Pr.01-45 = 1: 0.0–6000.0 sec.	10.00 10.0
✓	01-22	JOG Frequency	0.00–599.00 Hz	6.00
✓	01-23	First / Fourth Acceleration and Deceleration Frequency	0.00–599.00 Hz	0.00
✓	01-24	S-curve Acceleration Begin Time 1	Pr.01-45 = 0: 0.00–25.00 sec. Pr.01-45 = 1: 0.0–250.0 sec.	0.20 0.2
✓	01-25	S-curve Acceleration Arrival Time 2	Pr.01-45 = 0: 0.00–25.00 sec. Pr.01-45 = 1: 0.0–250.0 sec.	0.20 0.2
✓	01-26	S-curve Deceleration Begin Time 1	Pr.01-45 = 0: 0.00–25.00 sec. Pr.01-45 = 1: 0.0–250.0 sec.	0.20 0.2
✓	01-27	S-curve Deceleration Arrival Time 2	Pr.01-45 = 0: 0.00–25.00 sec. Pr.01-45 = 1: 0.0–250.0 sec.	0.20 0.2

	Pr.	Parameter Name	Settings	Default
	01-28	Skip Frequency 1 (Upper Limit)	0.00–599.00 Hz	0.00
	01-29	Skip Frequency 1 (Lower Limit)	0.00–599.00 Hz	0.00
	01-30	Skip Frequency 2 (Upper Limit)	0.00–599.00 Hz	0.00
	01-31	Skip Frequency 2 (Lower Limit)	0.00–599.00 Hz	0.00
	01-32	Skip Frequency 3 (Upper Limit)	0.00–599.00 Hz	0.00
	01-33	Skip Frequency 3 (Lower Limit)	0.00–599.00 Hz	0.00
	01-43	V/F Curve Selection	0: Determined by Pr.01-00–01-08 1: V/F curve to the power of 1.5 2: V/F curve to the power of 2	0
✓	01-44	Auto-Acceleration and Auto-Deceleration Setting	0: Linear acceleration and deceleration 1: Auto-acceleration and linear deceleration 2: Linear acceleration and auto-deceleration 3: Auto-acceleration and auto-deceleration 4: Stall prevention by auto-acceleration and auto-deceleration (limited by Pr.01-12–01-21)	0
	01-45	Time Unit for Acceleration and Deceleration and S-Curve	0: Unit 0.01 sec. 1: Unit 0.1 sec.	0
✓	01-46	Hold Time of Lower Limit Frequency	0–600 sec. 0: Disabled, AC motor drive maintains at the lower limit frequency 1–600: After maintaining the set number of seconds, the frequency of AC motor drive drops to 0 Hz.	0

02 Digital Input / Output Parameters

Pr.	Parameter Name	Settings	Default
02-00	Two-wire / Three-wire Operation Control	0: No function 1: Two-wire mode 1, power ON for operation control (M1: FWD / STOP, M2: REV / STOP) 2: Two-wire mode 2, power ON for operation control (M1: RUN / STOP, M2: REV / FWD) 3: Three-wire, power ON for operation control (M1: RUN, M2: REV / FWD, M3: STOP) 4: Two-wire mode 1, Quick Start (M1: FWD / STOP, M2: REV / STOP) 5: Two-wire mode 2, Quick Start (M1: RUN / STOP, M2: REV / FWD) 6: Three-wire, Quick Start (M1: RUN, M2: REV / FWD, M3: STOP) **IMPORTANT** 1. In the Quick Start function, the output remains ready for operation. The drive responds to the Start command immediately. 2. When using Quick Start function, the output terminals UVW are with driving voltages in order to output and respond immediately if a Start command is given. Do NOT touch the terminals or modify the motor wiring to prevent electric shocks.	1
02-01	Multi-function Input Command 1 (MI1)	0: No Function 1: Multi-step speed command 1 / multi-step position command 1 2: Multi-step speed command 2 / multi-step position command 2 3: Multi-step speed command 3 / multi-step position command 3 4: Multi-step speed command 4 / multi-step position command 4 5: Reset 6: JOG command 7: Acceleration / deceleration speed inhibit 8: 1st and 2nd acceleration / deceleration time selection 9: 3rd and 4th acceleration / deceleration time selection 10: External Fault (EF) input (Pr.07-20) 11: Base Block (B.B.) input from external 13: Cancel the setting of auto-acceleration / auto-deceleration time 15: Rotating speed command from AI1 16: Rotating speed command from AI2 18: Force to stop (Pr.07-20) 19: Digital up command	0
02-02	Multi-function Input Command 2 (MI2)		0
02-03	Multi-function Input Command 3 (MI3)		1
02-04	Multi-function Input Command 4 (MI4)		2

	Pr.	Parameter Name	Settings	Default
			20: Digital down command 22: Clear the counter 23: Input the counter value (MI4) 24: FWD JOG command 25: REV JOG command 38: Disable writing EEPROM function 41: HAND switch 42: AUTO switch 51: Selection for PLC mode bit 0 52: Selection for PLC mode bit 1 56: Local / Remote selection 58: Enable fire mode (with RUN command) 59: Enable fire mode (without RUN command) 69: Enable preheating function 97: Multi-pump manual / auto switch 100: Enable clean function	
✓	02-09	UP / DOWN Key Mode	0: UP / DOWN by the acceleration / deceleration time 1: UP / DOWN constant speed (Pr.02-10) 2: Pulse signal (Pr.02-10) 3: External terminals UP / DOWN key mode	0
✓	02-10	Constant Speed, Acceleration / Deceleration Speed of the UP / DOWN Key	0.001–1.000 Hz / ms	0.001
✓	02-11	Multi-function Input Response Time	0.000–30.000 sec.	0.005
✓	02-12	Multi-function Input Mode Selection	0000h–FFFFh (0: N.O.; 1: N.C.)	0000
✓	02-13	Multi-function Output 1 (RY1)	0: No Function 1: Indication during RUN 2: Operation speed reached 3: Desired frequency reached 1 (Pr.02-22) 4: Desired frequency reached 2 (Pr.02-24) 7: Over-torque 1 (Pr.06-06–06-08) 9: Drive is ready 10: Low voltage warning (Lv) (Pr.06-00) 11: Malfunction indication 13: Overheat warning (Pr.06-15) 15: Abnormal PID feedback 17: Count value reached, does not return to 0 (Pr.02-20) 18: Count value reached, return to 0 (Pr.02-19) 19: External interrupt B.B. input (Base Block) 20: Warning output 21: Over-voltage 22: Over-current stall prevention 23: Over-voltage stall prevention 24: Operation source 25: Forward command	11
✓	02-14	Multi-function Output 2 (RY2)		0
✓	02-16	Multi-function Output 3 (MO)		0

	Pr.	Parameter Name	Settings	Default
			26: Reverse command 29: Output when frequency ≥ Pr.02-34 30: Output when frequency < Pr.02-34 35: Error output selection 1 (Pr.06-23) 36: Error output selection 2 (Pr.06-24) 37: Error output selection 3 (Pr.06-25) 38: Error output selection 4 (Pr.06-26) 40: Speed reached (including STOP) 44: Low current output (use with Pr.06-71–Pr.06-73) 51: Analog output control for RS-485 interface 52: Output control for communication cards 53: Fire mode indication 67: Analog input level reached 69: Indication of preheating operation 75: Forward RUN status 76: Reverse RUN status	
✓	02-18	Multi-function Output Direction	0000h–FFFFh (0: N.O.; 1: N.C.)	0000
✓	02-19	Terminal Counting Value Reached (returns to 0)	0–65500	0
✓	02-20	Preliminary Counting Value Reached (does not return to 0)	0–65500	0
✓	02-22	Desired Frequency Reached 1	0.00–599.00 Hz	150.00
✓	02-23	The Width of the Desired Frequency Reached 1	0.00–599.00 Hz	2.00
✓	02-24	Desired Frequency Reached 2	0.00–599.00 Hz	150.00
✓	02-25	The Width of the Desired Frequency Reached 2	0.00–599.00 Hz	2.00
	02-34	Output Frequency Setting for Multi-function Output Terminal	0.00–599.00 Hz	0.00
✓	02-35	External Operation Control Selection after Reset and Reboot	0: Disabled 1: Drive runs if the RUN command remains after reset or reboot. 2: After re-powering ON, execute the drive according to the operating status before it was OFF.	0
	02-50	Display the Status of Multi-function Input Terminal	Monitor the status of the Multi-function Input Terminal	Read only
	02-51	Display the Status of Multi-function Output Terminal	Monitor the status of the Multi-function Output Terminal	Read only
	02-52	Display the External Multi-function Input Terminals Used by PLC	0–65535	0
	02-53	Display the External Multi-function Output Terminals Used by PLC	0–65535	0
	02-54	Display the Frequency Command Executed by External Terminal	Read only	Read only
✓	02-72	Preheating DC current level	0–100%	0

	Pr.	Parameter Name	Settings	Default
✓	02-73	Preheating DC Current Duty Cycle	0–100%	0

03 Analog Input / Output Parameters

	Pr.	Parameter Name	Settings	Default
✓	03-00	AI1 Analog Input Selection	0: No Function 1: Frequency command 5: PID feedback signal 6: Thermistor input value (PTC-130 / KTY-84-130) 21: Pressure inputs (outlet side) 22: Pressure inputs (inlet side) 23: Flow inputs	5
✓	03-01	AI2 Analog Input Selection		0
✓	03-03	AI1 analog input bias	-100.0–100.0%	0
✓	03-04	AI2 analog input bias	-100.0–100.0%	0
✓	03-07	AI1 Positive / Negative Bias Mode	0: No bias 4: Bias serves as the center	0
✓	03-08	AI2 Positive / Negative Bias Mode		
✓	03-11	AI1 analog input gain	-500.0–500.0%	100.0
✓	03-12	AI2 analog input gain	-500.0–500.0%	100.0
✓	03-15	AI1 Analog Input Filter Time	0.00–20.00 sec.	0.01
✓	03-16	AI2 Analog Input Filter Time	0.00–20.00 sec.	0.01
✓	03-19	Signal Loss Selection for AI1 Analog Input 4–20 mA	0: Disabled 1: Continue operation at the last frequency 2: Decelerate to 0 Hz 3: Stop immediately and display ACE	0
✓	03-20	Multi-function Output (AFM)	0: Output frequency (Hz) 1: Frequency command (Hz) 2: Motor speed (Hz) 3: Output current (rms) 4: Output voltage 5: DC bus voltage 6: Power factor 7: Power 9: AI1 analog input 10: AI2 analog input 21: RS-485 analog output 22: Communication card analog output 23: Constant voltage output	0
✓	03-21	AFM Analog Output Gain	0–500.0%	100.0
✓	03-22	AFM Analog Output in REV Direction	0: Absolute value in output voltage 1: Reverse output 0 V; forward output 0–10 V 2: Reverse output 5-0 V; forward output 5–10 V	0
✓	03-27	AFM Output Bias	-100.00–100.00%	0.00
✓	03-28	AI1 Terminal Input Selection	0: 0–10 V 1: 0–20 mA 2: 4–20 mA	2
	03-29	AI2 Terminal Input Selection	0: 0–10 V 1: 0–20 mA 2: 4–20 mA	2
✓	03-30	PLC Analog Output Terminal Status	bit 0: Reserved bit 1: AFM	0

	Pr.	Parameter Name	Settings	Default
✓	03-32	AFM DC Output Setting Level	0.00–100.00%	0.00
✓	03-35	AFM Output Filter Time	0.00–20.00 sec.	0.01
✓	03-44	Multi-function Output (MO) by AI Level Source	0: AI1 1: AI2	0
✓	03-45	AI1 Upper Level 1	-100.00–100.00%	50
✓	03-46	AI1 Lower Level 2	-100.00–100.00%	10
✓	03-47	AI2 Upper Level 1	-100.00–100.00%	50
✓	03-48	AI2 Lower Level 2	-100.00–100.00%	10
✓	03-50	Analog Input Curve Selection	0: Normal curve 1: Three-point curve of AI1 2: Three-point curve of AI2 3: Three-point curve of AI1 and AI2	0
✓	03-51	AI1 Lowest Point	Pr.03-28 = 0.00–10.00 V Pr.03-28 =1, 0.00–20.00 mA Pr.03-28 =2, 4.00–20.00 mA	4.00
✓	03-52	AI1 Proportional Lowest Point	0.00–100.00%	0.00
✓	03-53	AI1 Mid-point	Pr.03-28 = 0.00–10.00 V Pr.03-28 =1, 0.00–20.00 mA Pr.03-28 =2, 4.00–20.00 mA	12.00
✓	03-54	AI1 Proportional Mid-point	0.00–100.00%	50.00
✓	03-55	AI1 Highest Point	Pr.03-28 = 0, 0.00–10.00 V Pr.03-28 =1, 0.00–20.00 mA Pr.03-28 =2, 4.00–20.00 mA	20.00
✓	03-56	AI1 Proportional Highest Point	0.00–100.00%	100.00
✓	03-57	AI2 Lowest Point	Pr.03-29 = 0, 0.00–10.00 V Pr.03-29 =1, 0.00–20.00 mA Pr.03-29 =2, 4.00–20.00 mA	4.00
✓	03-58	AI2 Proportional Lowest Point	0.00–100.00%	0.00
✓	03-59	AI2 Mid-point	Pr.03-29 = 0, 0.00–10.00 V Pr.03-29 =1, 0.00–20.00 mA Pr.03-29 =2, 4.00–20.00 mA	12.00
✓	03-60	AI2 Proportional Mid-point	0.00–100.00%	50.00
✓	03-61	AI2 Highest Point	Pr.03-29 = 0, 0.00–10.00 V Pr.03-29 =1, 0.00–20.00 mA Pr.03-29 =2, 4.00–20.00 mA	20.00
✓	03-62	AI2 Proportional Highest Point	0.00–100.00%	100.00
✓	03-69	Signal Loss Selection For AI2 Analog Input 4–20 mA	0: Disabled 1: Continue operation at the last frequency 2: Decelerate to 0 Hz 3: Stop immediately and display ACE	0

04 Multi-Step Speed Parameters

Pr.04-50 to Pr.04-99 listed below are the settings when built-in PLC function is ON. If the built-in PLC function is not loaded into the drive, Pr.04-50 to Pr.04-99 are PLC buffer 0 to PLC buffer 50, and the setting range is 0–65535, the default is 0.

But if the built-in PLC function is loaded into the drive, see the explanation below:

	Pr.	Parameter Name	Settings	Default
✓	04-00	1st Step Speed Frequency	0.00–599.00 Hz	0.00
✓	04-01	2nd Step Speed Frequency	0.00–599.00 Hz	0.00
✓	04-02	3rd Step Speed Frequency	0.00–599.00 Hz	0.00
✓	04-03	4th Step Speed Frequency	0.00–599.00 Hz	0.00
✓	04-04	5th Step Speed Frequency	0.00–599.00 Hz	0.00
✓	04-05	6th Step Speed Frequency	0.00–599.00 Hz	0.00
✓	04-06	7th Step Speed Frequency	0.00–599.00 Hz	0.00
✓	04-07	8th Step Speed Frequency	0.00–599.00 Hz	0.00
✓	04-08	9th Step Speed Frequency	0.00–599.00 Hz	0.00
✓	04-09	10th Step Speed Frequency	0.00–599.00 Hz	0.00
✓	04-10	11th Step Speed Frequency	0.00–599.00 Hz	0.00
✓	04-11	12th Step Speed Frequency	0.00–599.00 Hz	0.00
✓	04-12	13th Step Speed Frequency	0.00–599.00 Hz	0.00
✓	04-13	14th Step Speed Frequency	0.00–599.00 Hz	0.00
✓	04-14	15th Step Speed Frequency	0.00–599.00 Hz	0.00
✓	04-50	PLC Buffer 0	0–65535	0
✓	04-51	PLC Buffer 1	0–65535	0
✓	04-52	PLC Buffer 2	0–65535	0
✓	04-53	PLC Buffer 3	0–65535	0
✓	04-54	PLC Buffer 4	0–65535	0
✓	04-55	PLC Buffer 5	0–65535	0
✓	04-56	PLC Buffer 6	0–65535	0
✓	04-57	Pump System Configuration Setting	bit 0–3, source of frequency 00x0h: Digital keypad 00x1h: RS-485 communication (COM2) 00x8h: Communication card (does not include CANopen card) bit 4–7, source of operation 000xh: Digital keypad 001xh: RS-485 communication (COM2) 002xh: External terminals (MI1) 005xh: Communication card (does not include CANopen card) bit 8, set to be the backup master bit 9, display a PL00 warning when the backup master becomes the master.	0
✓	04-58	Weekdays, weekend, specific day schedule	bit 0: 1 (duty day) bit 1: 1 (weekend) bit 2: 1 (specific date)	0
✓	04-59	Weekend Setting	0: Saturday, Sunday 1: Sunday	0

	Pr.	Parameter Name	Settings	Default
✓	04-60	Duty day start time 1	00:00~23:59	00:00
✓	04-61	Duty day set point pressure 1	0–65535	0
✓	04-62	Duty day start time 2	00:00~23:59	00:00
✓	04-63	Duty day set point pressure 2	0–65535	0
✓	04-64	Duty day start time 3	00:00~23:59	00:00
✓	04-65	Duty day set point pressure 3	0–65535	0
✓	04-66	Duty day start time 4	00:00~23:59	00:00
✓	04-67	Duty day set point pressure 4	0–65535	0
✓	04-68	Duty day start time 5	00:00~23:59	00:00
✓	04-69	Duty day set point pressure 5	0–65535	0
✓	04-70	Weekend start time 1	00:00~23:59	00:00
✓	04-71	Weekend set point pressure 1	0–65535	0
✓	04-72	Weekend start time 2	00:00~23:59	00:00
✓	04-73	Weekend set point pressure 2	0–65535	0
✓	04-74	Weekend start time 3	00:00~23:59	00:00
✓	04-75	Weekend set point pressure 3	0–65535	0
✓	04-76	Weekend start time 4	00:00~23:59	00:00
✓	04-77	Weekend set point pressure 4	0–65535	0
✓	04-78	Weekend start time 5	00:00~23:59	00:00
✓	04-79	Weekend set point pressure 5	0–65535	0
✓	04-80	Specific date start date 1	MM.DD (MM = month, 01–12; DD = date, 01–31)	00.00
✓	04-81	Specific Day End Date 1	MM.DD (MM = month, 01–12; DD = date, 01–31)	00.00
✓	04-82	Specific date start date 2	MM.DD (MM = month, 01–12; DD = date, 01–31)	00.00
✓	04-83	Specific Day End Date 2	MM.DD (MM = month, 01–12; DD = date, 01–31)	00.00
✓	04-84	Specific date start date 3	MM.DD (MM = month, 01–12; DD = date, 01–31)	00.00
✓	04-85	Specific Day End Date 3	MM.DD (MM = month, 01–12; DD = date, 01–31)	00.00
✓	04-86	Specific date start date 4	MM.DD (MM = month, 01–12; DD = date, 01–31)	00.00
✓	04-87	Specific Day End Date 4	MM.DD (MM = month, 01–12; DD = date, 01–31)	00.00
✓	04-88	Specific date start date 5	MM.DD (MM = month, 01–12; DD = date, 01–31)	00.00
✓	04-89	Specific Day End Date 5	MM.DD (MM = month, 01–12; DD = date, 01–31)	00.00
✓	04-90	Specific date start time 1	00:00~23:59	00:00
✓	04-91	Specific date set point pressure 1	0–65535	0
✓	04-92	Specific date start time 2	00:00~23:59	00:00
✓	04-93	Specific date set point pressure 2	0–65535	0
✓	04-94	Specific date start time 3	00:00~23:59	00:00
✓	04-95	Specific date set point pressure 3	0–65535	0
✓	04-96	Specific date start time 4	00:00~23:59	00:00
✓	04-97	Specific date set point pressure 4	0–65535	0
✓	04-98	Specific date start time 5	00:00~23:59	00:00
✓	04-99	Specific date set point pressure 5	0–65535	0

05 Motor Parameters

	Pr.	Parameter Name	Settings	Default
	05-00	Motor Parameter Auto-tuning	0: No Function 5: Rolling auto-tuning for motor 13: High frequency stall test for motor	0
	05-01	Full-Load Current for Induction Motor 1 (A)	10–120% of the drive's rated current	Depend on the model power
✓	05-02	Rated Power for Induction Motor 1 (kW)	0.00–655.35 kW	Depend on the model power
✓	05-03	Rated Speed for Induction Motor 1 (rpm)	0–xxxxx rpm (Depend on the motor's number of poles) 1710 (60 Hz 4 poles); 1410 (50 Hz 4 poles)	Depend on the motor's number of poles
	05-04	Number of Poles for Induction Motor 1	2–20	4
	05-05	No-Load Current for Induction Motor 1 (A)	0.00–Pr.05-01 default	Depend on the model power
	05-06	Stator Resistance (Rs) for Induction Motor 1	0.000–65.535 Ω	Depend on the model power
	05-07	Rotor Resistance (Rr) for Induction Motor 1	0.000–65.535 Ω	0.000
	05-08	Magnetizing Inductance (Lm) for Induction Motor 1	0.0–6553.5 mH	0.0
	05-09	Stator Inductance (Lx) for Induction Motor 1	0.0–6553.5 mH	0.0
✓	05-26	Motor Accumulated Watt in Every Millisecond (W-msec.)	Read only	0.0
	05-27	Motor Accumulated Watt in Every Second (W-sec.)	Read only	0.0
✓	05-28	Motor Accumulated Watt In Every Hour (W-hour)	Read only	0.0
	05-29	Motor Accumulated Kilowatt in Every Hour (kW-hour)	Read only	0.0
	05-30	Motor Accumulated Megawatt in Every Hour (MW-hour)	Read only	0.0
	05-31	Accumulated Motor Operation Time (minutes)	0–1439	0
	05-32	Accumulated Motor Operation Time (days)	0–65535	0

Pr.	Parameter Name	Settings	Default
05-33	Induction Motor (IM) or Permanent Magnet Synchronous AC Motor (PM) Selection	0: IM (Induction motor) 1: SPM (Surface permanent magnet synchronous AC motor) 2: IPM (Interior permanent magnet synchronous AC motor) Delta MSI series motor	3
05-34	Motor Full-load Current	0–120% of the drive's rated current	#.#
05-35	Motor Rated Power	0.00–655.35 kW	#.#
05-36	Motor Rated Speed	0–65535 rpm	3000
05-37	Number of Poles for A Motor	0–65535	Differs from models (6 / 8)
05-39	Stator Resistance for A Motor	0.000–65.535 Ω	0.000
05-40	Motor Ld	0.00–655.35 mH	0.00
05-41	Motor Lq	0.00–655.35 mH	0.00
05-43	Ke Parameter of a Motor	0.0–6553.5 V/krpm	0

06 Protection Parameters (1)

	Pr.	Parameter Name	Settings	Default
✓	06-00	Low Voltage Level	300.0–440.0 V_{DC}	360.0
✓	06-01	Over-voltage Stall Prevention	0: No Function 0.0–900.0 V_{DC}	760.0
✓	06-02	Selection for Over-voltage Stall Prevention	0: Traditional over-voltage stall prevention 1: Smart over-voltage stall prevention	0
✓	06-03	Over-current Stall Prevention during Acceleration	Normal duty: 0–150% (100% corresponds to the rated current of the drive)	120
✓	06-04	Over-current Stall Prevention during Operation	Normal duty: 0–150% (100% corresponds to the rated current of the drive)	120
✓	06-05	Acceleration / Deceleration Time Selection for Stall Prevention at Constant Speed	0: By current acceleration / deceleration time 1: By the first acceleration / deceleration time 2: By the second acceleration / deceleration time 3: By the third acceleration / deceleration time 4: By the fourth acceleration / deceleration time 5: By auto-acceleration / auto-deceleration	0
✓	06-06	Over-torque Detection Selection (Motor 1)	0: No function 1: Continue operation after over-torque detection during constant speed operation 2: Stop after over-torque detection during constant speed operation 3: Continue operation after over-torque detection during RUN 4: Stop after over-torque detection during RUN	0
✓	06-07	Over-torque detection level (motor 1)	10–250% (100% corresponds to the rated current of the drive)	120
✓	06-08	Over-torque Detection Time (Motor 1)	0.0–60.0 sec.	0.1
✓	06-13	Electronic Thermal Relay Selection 1 (Motor 1)	1: Standard motor (motor with fan on the shaft) 2: Disabled	2
✓	06-14	Electronic Thermal Relay Action Time 1 (Motor 1)	30.0–600.0 sec.	60.0
✓	06-15	Temperature Level Overheat (OH) Warning	0.0–110.0ºC	105.0
✓	06-16	Stall Prevention Limit Level (Weak Magnetic Field Current Stall Prevention Level)	0–100% (Refer to Pr.06-03)	100
	06-17	Fault Record 1	0: No fault record 1: Over-current during acceleration (ocA) 2: Over-current during deceleration (ocd) 3: Over-current during steady operation (ocn) 4: Ground fault (GFF) 6: Over-current at stop (ocS) 7: Over-voltage during acceleration (ovA) 8: Over-voltage during deceleration (ovd) 9: Over-voltage during constant speed (ovn) 10: Over-voltage at stop (ovS)	0
	06-18	Fault Record 2		0
	06-19	Fault Record 3		0
	06-20	Fault Record 4		0
	06-21	Fault Record 5		0
	06-22	Fault Record 6		0
		Fault Record 7 (Pr.14-70)		

Pr.	Parameter Name	Settings	Default
	Fault Record 8 (Pr.14-71) Fault Record 9 (Pr.14-72) Fault Record 10 (Pr.14-73)	11: Low-voltage during acceleration (LvA) 12: Low-voltage during deceleration (Lvd) 13: Low-voltage at constant speed (Lvn) 14: Low-voltage at stop (LvS) 15: Phase loss protection (orP) 16: IGBT overheating (oH1) 17: Heatsink overheating (oH2) 18: IGBT temperature detection failure (tH1o) 19: Capacitor hardware error (tH2o) 21: Over load (oL) 22: Electronics thermal relay 1 protection (EoL1) 24: Motor overheating (PTC-130 / KTY-84-130) (oH3) 26: Over torque 1 (ot1) 28: Under current (uC) 31: EEPROM read error (cF2) 33: U-phase error (cd1) 34: V-phase error (cd2) 35: W-phase error (cd3) 36: cc hardware error (Hd0) 37: oc hardware error (Hd1) 40: Auto-tuning error (AUE) 41: PID loss ACI (AFE) 48: ACI loss (ACE) 49: External fault (EF) 51: External base block (bb) 52: Password is locked (Pcod) 54: Illegal command (CE1) 55: Illegal data address (CE2) 56: Illegal data value (CE3) 57: Data is written to read-only address (CE4) 58: Modbus transmission time-out (CE10) 79: U-phase over-current before run (Aoc) 80: V-phase over-current before run (boc) 81: W-phase over-current before run (coc) 82: U-phase output phase loss (oPL1) 83: V-phase output phase loss (oPL2) 84: W-phase output phase loss (oPL3) 87: Low frequency overload protection (oL3) 89: Rotor position detection error (roPd) 90: Force to stop (FStp) 98: Fire mode output (Fire) 140: oc hardware error (Hd6) 141: GFF occurs before run (b4GFF) 142: Auto-tune error 1 (AuE1) (DC test stage) 143: Auto-tune error 2 (AuE2) (high frequency stall stage) 144: Auto-tune error 3 (AuE3) (rotation test stage)	

	Pr.	Parameter Name	Settings	Default
			221: High water pressure (HPS) 222: Low water pressure (LPSE) 223: Dry pump (dryE) 224: Water leaking (pipe explosion) (LEKE) 225: Clogged pipe (JAME) 226: RTC error (rtF) 227: Dry pump curve auto-measuring (dAUE)	
✓	06-23	Fault Output Option 1	0–65535 (refer to bit table for fault code)	0
✓	06-24	Fault Output Option 2	0–65535 (refer to bit table for fault code)	0
✓	06-25	Fault Output Option 3	0–65535 (refer to bit table for fault code)	0
✓	06-26	Fault Output Option 4	0–65535 (refer to bit table for fault code)	0
✓	06-29	PTC-130 / KTY84-130 Action	0: Warn and continue operation 1: Fault and ramp to stop 2: Fault and coast to stop 3: No warning	0
✓	06-30	PTC-130 / KTY84-130 Level	0.0–100.0%	50.0
	06-31	Frequency Command at Malfunction	0.00–599.00 Hz	Read only
	06-32	Output Frequency at Malfunction	0.00–599.00 Hz	Read only
	06-33	Output Voltage at Malfunction	0.0–6553.5 V	Read only
	06-34	DC bus Voltage at Malfunction	0.0–6553.5 V	Read only
	06-35	Output Current at Malfunction	0.00–655.35 Amps	Read only
	06-36	IGBT Temperature at Malfunction	0.0–6553.5ºC	Read only
	06-38	Motor Speed at Malfunction	0–65535 rpm	Read only
	06-39	Torque Command at Malfunction	-32768–32767	Read only
	06-40	Status of the Multi-function Input Terminal at Malfunction	0000h–FFFFh	Read only
	06-41	Status of the Multi-function Output Terminal at Malfunction	0000h–FFFFh	Read only
	06-42	Drive Status at Malfunction	0000h–FFFFh	Read only
✓	06-45	Output Phase Loss Detection Action (OPHL)	0: Warn and continue operation 1: Fault and ramp to stop 2: Fault and coast to stop 3: No warning	3
✓	06-46	Detection Time for Output Phase Loss	0.000–65.535 sec.	0.500
✓	06-47	Current Detection Level for Output Phase Loss	0.00–100.00%	1.00

	Pr.	Parameter Name	Settings	Defaul t
✓	06-48	DC Brake Time for Output Phase Loss	0.000–65.535 sec.	0.000
✓	06-49	LvX Auto-reset	0: Disabled 1: Enabled	0
✓	06-53	Input Phase Loss Detection Action (OrP)	0: Fault and ramp to stop 1: Fault and coast to stop	0
✓	06-55	Derating Protection	0: Constant rated current and limit carrier frequency by load current and temperature 1: Constant carrier frequency and limit load current by setting carrier frequency 2: Constant rated current (same as setting 0), but close current limit	0
✓	06-60	Software Detection GFF Current Level	0.0–6553.5%	60.0
✓	06-61	Software Detection GFF Filter Time	0.00–655.35 sec.	0.10
	06-63	Operation Time of Fault Record 1 (Day)	0–65535 days	Read only
	06-64	Operation Time of Fault Record 1 (Min.)	0–1439 min.	Read only
	06-65	Operation Time of Fault Record 2 (Day)	0–65535 days	Read only
	06-66	Operation Time of Fault Record 2 (Min.)	0–1439 min.	Read only
	06-67	Operation Time of Fault Record 3 (Day)	0–65535 days	Read only
	06-68	Operation Time of Fault Record 3 (Min.)	0–1439 min.	Read only
	06-69	Operation Time of Fault Record 4 (Day)	0–65535 days	Read only
	06-70	Operation Time of Fault Record 4 (Min.)	0–1439 min.	Read only
✓	06-71	Low Current Setting Level	0.0–100.0%	0.0
✓	06-72	Low Current Detection Time	0.00–360.00 sec.	0.00
✓	06-73	Low Current Action	0: No Function 1: Fault and coast to stop 2: Fault and ramp to stop by the 2nd deceleration time 3: Warn and continue operation	0
	06-80	Fire Mode	0: Disabled 1: Forward operation (counterclockwise) 2: Reverse operation (clockwise)	0
	06-81	Operating Frequency in Fire Mode	0.00–180.00 Hz	150.00
	06-86	PTC Type	0: PTC-130 1: KTY84-130	0

Pr.	Parameter Name	Settings	Defaul t
06-88	Operation Times in Fire Mode	0–65535 times	Read only
06-90	Operation Time of Fault Record 5 (Day)	0–65535 days	Read only
06-91	Operation Time of Fault Record 5 (Min.)	0–1439 min.	Read only
06-92	Operation Time of Fault Record 6 (Day)	0–65535 days	Read only
06-93	Operation Time of Fault Record 6 (Min.)	0–1439 min.	Read only

07 Special Parameters

	Pr.	Parameter Name	Settings	Default
✓	07-01	DC Brake Current Level	0–100%	0
✓	07-02	DC Brake Time At Start-up	0.0–60.0 sec.	0.0
✓	07-03	DC Brake Time at STOP	0.0–60.0 sec.	0.0
✓	07-05	Voltage Increasing Gain	1–200%	100
✓	07-06	Restart After Momentary Power Loss	0: Stop operation 1: Speed tracking by the speed before the power loss	0
✓	07-07	Allowed Power Loss Duration	0.0–20.0 sec.	2.0
✓	07-08	Base Block Time	0.1–5.0 sec.	0.5
✓	07-09	Current Limit of Speed Tracking	20–200%	100
✓	07-10	Restart after Fault Action	0: Stop operation 1: Speed tracking by current speed	0
✓	07-11	Number of Times of Restart After Fault	0–10	0
✓	07-12	Speed Tracking During Start-up	0: No function 1: Speed tracking by the maximum output frequency 2: Speed tracking by the current frequency command at start-up 3: Speed tracking by the minimum output frequency	0
	07-19	Fan Cooling Control	0: Fan is always ON 1: Fan is OFF after the AC motor drive stops for one minute. 2: Fan is ON when the AC motor drive runs; fan is OFF when the AC motor drive stops 3: Fan turns ON when temperature (IGBT) reaches around 60°C.	3
✓	07-20	Emergency Stop (EF) & Force to Stop Selection	0: Coast to stop 1: Stop by the first deceleration time 2: Stop by the second deceleration time 3: Stop by the third deceleration time 4: Stop by the fourth deceleration time 5: System deceleration 6: Automatic deceleration	0
✓	07-21	Automatic Energy Saving (AES) Setting	0: Disabled 1: AES optimization (for VF, SVC control modes)	0
✓	07-23	Automatic Voltage Regulation (AVR) Function	0: Enable AVR 1: Disable AVR 2: Disable AVR during deceleration	0
✓	07-24	Torque Command Filter Time	0.001–10.000 sec.	0.050
✓	07-25	Slip Compensation Filter Time	0.0001–10.000 sec.	0.100
✓	07-26	Torque Compensation Gain	0–5000	1
✓	07-27	Slip Compensation Gain	0.00–10.00	0.00 Default value is 1.00 in SVC mode)
✓	07-29	Slip Deviation Level	0.0–100.0% 0: No detection	0

	Pr.	Parameter Name	Settings	Default
✓	07-30	Over-Slip Deviation Detection Time	0.0–10.0	1.0
✓	07-31	Over-Slip Deviation Treatment	0: Warn and continue operation 1: Fault and ramp to stop 2: Fault and coast to stop 3: No warning	0
✓	07-32	Motor Oscillation Compensation Factor	0–10000	1000
✓	07-33	Auto-restart Interval of Fault	0.0–6000.0	60.0
	07-35	Status Record When the Drive Is Powered Off	0–65535	Read only
✓	07-36	Restart Delay Time after Power Off	1–10 sec.	5
	07-38	Voltage Feed Forward Gain	0.50–2.00	1.00
✓	07-41	AES Minimum Frequency	0.00–40.00 Hz	10.00
✓	07-42	AES Delay Time	0–600 sec.	5
✓	07-44	AES Maximum Voltage Drop	0.00–70.00%	60.00
✓	07-45	AES Coefficient	0–10000%	100
✓	07-82	AES Kp Gain	0–65535 pu	500
✓	07-83	AES Ki Gain	0–65535 pu	500

08 High-function PID Parameters

	Pr.	Parameter Name	Settings	Default
✓	08-00	Terminal selection of PID feedback	0: No Function 1: Negative PID feedback: by analog input (Pr.03-00)	0
✓	08-01	Proportional gain (P)	0.0–500.0 (when Pr.08-23 set bit1 = 0) 0.00–5000.0 (when Pr.08-23 set bit1 = 1)	1.00
✓	08-02	Integral Time (I)	0.00–100.00 sec.	1.00
✓	08-03	Differential Time (D)	0.00–1.00 sec.	0.00
✓	08-04	Upper Limit of Integral Control	0.0–100.0%	100.0
✓	08-05	PID Output Command Limit (Positive Limit)	0.0–100.0%	100.0
✓	08-08	Feedback Signal Detection Time	0.0–3600.0 sec.	0.0
✓	08-09	Treatment of Feedback Signal	0: Warn and continue operation 1: Fault and ramp to stop 2: Fault and coast to stop 3: Warn and operate at last frequency	0
	08-20	PID Mode Selection	0: Serial connection 1: Parallel connection	0
✓	08-23	PID Control Flag	bit 1 = 1, two decimal places for PID Kp bit 1 = 0, one decimal place for PID Kp bit 2 = 1, positive feedback bit 2 = 0, negative feedback	2
✓	08-55	PID Feedback Mathematics	0: AI1 1: AI1 + k*AI2 2: AI1 - k*AI2 3: AI1 * k*AI2 4: AI1 / k*AI2 5: MIN(AI1, AI2) 6: MAX(AI1, AI2) 7: AVE(AI1, AI2) 8: sqrt(AI1) 9: sqrt(AI1 – AI2) 10: sqrt(AI1 + AI2) 11: sqrt(AI1) + sqrt(AI2) 12: k * sqrt(AI1) 13: k * sqrt(AI1 – AI2) 14: $(AI1 - AI2)^2$ 15: $(AI1)^2 + (AI2)^2$	0
✓	08-56	PID Feedback Mathematics Gain	-300.0–300.0	1.0
✓	08-57	PID Feedback Mathematics Upper Limit	0–999	0

09 Communication Parameters

	Pr.	Parameter Name	Settings	Default
✓	09-00	Communication Address	1–254	1
✓	09-01	COM1 Transmission Speed	4.8–115.2 Kbps	115.2
✓	09-02	COM1 Transmission Fault Treatment	0: Warn and continue operation 1: Fault and ramp to stop 2: Fault and coast to stop 3: No warning, no fault, and continue operation	3
✓	09-03	COM1 Time-out Detection	0.0–100.0 sec.	0.0
✓	09-04	COM1 Communication Protocol	1: 7, N, 2 (ASCII) 2: 7, E, 1 (ASCII) 3: 7, O, 1 (ASCII) 4: 7, E, 2 (ASCII) 5: 7, O, 2 (ASCII) 6: 8, N, 1 (ASCII) 7: 8, N, 2 (ASCII) 8: 8, E, 1 (ASCII) 9: 8, O, 1 (ASCII) 10: 8, E, 2 (ASCII) 11: 8, O, 2 (ASCII) 12: 8, N, 1 (RTU) 13: 8, N, 2 (RTU) 14: 8, E, 1 (RTU) 15: 8, O, 1 (RTU) 16: 8, E, 2 (RTU) 17: 8, O 2 (RTU)	12
✓	09-05	COM2 Transmission Speed	4.8–115.2 Kbps	9.6
✓	09-06	COM2 Transmission Fault Treatment	0: Warn and continue operation 1: Fault and ramp to stop 2: Fault and coast to stop 3: No warning, no fault, and continue operation	3
✓	09-07	COM2 Time-out Detection	0.0–100.0 sec.	0.0
✓	09-08	COM2 Communication Protocol	1: 7, N, 2 (ASCII) 2: 7, E, 1 (ASCII) 3: 7, O, 1 (ASCII) 4: 7, E, 2 (ASCII) 5: 7, O, 2 (ASCII) 6: 8, N, 1 (ASCII) 7: 8, N, 2 (ASCII) 8: 8, E, 1 (ASCII) 9: 8, O, 1 (ASCII) 10: 8, E, 2 (ASCII) 11: 8, O, 2 (ASCII) 12: 8, N, 1 (RTU) 13: 8, N, 2 (RTU) 14: 8, E, 1 (RTU) 15: 8, O, 1 (RTU) 16: 8, E, 2 (RTU) 17: 8, O 2 (RTU)	1

	Pr.	Parameter Name	Settings	Default
✓	09-09	Communication Response Delay Time	0.0–200.0 ms	2.0
	09-10	Communication Main Frequency	0.00–599.00 Hz	150.00
✓	09-11	Block Transfer 1	0–65535	0
✓	09-12	Block Transfer 2	0–65535	0
✓	09-13	Block Transfer 3	0–65535	0
✓	09-14	Block Transfer 4	0–65535	0
✓	09-15	Block Transfer 5	0–65535	0
✓	09-16	Block Transfer 6	0–65535	0
✓	09-17	Block Transfer 7	0–65535	0
✓	09-18	Block Transfer 8	0–65535	0
✓	09-19	Block Transfer 9	0–65535	0
✓	09-20	Block Transfer 10	0–65535	0
✓	09-21	Block Transfer 11	0–65535	0
✓	09-22	Block Transfer 12	0–65535	0
✓	09-23	Block Transfer 13	0–65535	0
✓	09-24	Block Transfer 14	0–65535	0
✓	09-25	Block Transfer 15	0–65535	0
✓	09-26	Block Transfer 16	0–65535	0
	09-30	Communication Decoding Method	0: Decoding method 1 1: Decoding method 2	0
	09-31	COM1 internal communication protocol	0: Modbus 485	0
✓	09-32	SG2 COM Protocol	0: Modbus 1: BACnet MS/TP	0
✓	09-33	PLC Command force to 0	bit 0: every time before PLC scan, set the PLC target frequency = 0 bit 1: every time before PLC scan, set the PLC target torque = 0 bit 2: every time before PLC scan, set the speed limit of torque mode = 0	0
	09-34	PLC program ID	0–65535	0
	09-35	PLC Address	1–254	100
✓	09-45	BACnet MAC ID	0–127	10
✓	09-46	BACnet MAC ID Maximum	0–127	127
✓	09-47	BACnet Device ID	0–127	55
✓	09-48	BACnet Password	0–65535	0
	09-60	Communication card identification	0: No communication card 1: DeviceNet Slave 2: Profibus-DP Slave 5: EtherNet/IP Slave 12: Profinet 13: Bluetooth	Read only
	09-61	Firmware Version of Communication Card	0–655.35 (read only)	Read only
	09-62	Product Code	0–655.35 (read only)	Read only

	Pr.	Parameter Name	Settings	Default
	09-63	Fault code	0–655.35 (read only)	Read only
✓	09-70	Communication Card Address (for DeviceNet or Profibus)	DeviceNet: 0–63 Profibus-DP: 1–125	1
✓	09-71	Communication card speed setting (for DeviceNet)	Standard DeviceNet: 0: 125 Kbps 1: 250 Kbps 2: 500 Kbps 3: 1 Mbps (Delta Only) Non-standard DeviceNet: (Delta only) 0: 10 Kbps 1: 20 Kbps 2: 50 Kbps 3: 100 Kbps 4: 125 Kbps 5: 250 Kbps 6: 500 Kbps 7: 800 Kbps 8: 1 Mbps	2
✓	09-72	Additional Settings for Communication Card Speed (for DeviceNet)	0: Standard DeviceNet 1: Non-standard DeviceNet	0
✓	09-75	Communication card IP configuration (for EtherNet)	0: Static IP 1: Dynamic IP (DHCP)	0
✓	09-76	Communication card IP address 1 (for EtherNet)	0–255	0
✓	09-77	Communication card IP address 2 (for EtherNet)	0–255	0
✓	09-78	Communication card IP address 3 (for EtherNet)	0–255	0
✓	09-79	Communication card IP address 4 (for EtherNet)	0–255	0
✓	09-80	Communication card address mask 1 (for EtherNet)	0–255	0
✓	09-81	Communication card address mask 2 (for EtherNet)	0–255	0
✓	09-82	Communication card address mask 3 (for EtherNet)	0–255	0
✓	09-83	Communication card address mask 4 (for EtherNet)	0–255	0
✓	09-84	Communication card gateway address 1 (for EtherNet)	0–255	0
✓	09-85	Communication card gateway address 2 (for EtherNet)	0–255	0
✓	09-86	Communication card gateway address 3 (for EtherNet)	0–255	0
✓	09-87	Communication card gateway address 4 (for EtherNet)	0–255	0

	Pr.	Parameter Name	Settings	Default
✓	09-88	Communication Card Password (Low Word) (for EtherNet)	0–99	0
✓	09-89	Communication Card Password (High Word) (for EtherNet)	0–99	0
✓	09-90	Reset Communication Card (for EtherNet)	0: No function 1: Reset to defaults	0
✓	09-91	Additional setting for the communication card (for EtherNet)	bit 0: enable IP filter bit 1: enable internet parameters bit 2: enable login password	0
	09-92	Communication card status (for EtherNet)	bit 0: enable password	Read only

10 Speed Feedback Control Parameters

	Pr.	Parameter Name	Settings	Default
✓	10-29	Upper Limit of Frequency Deviation	0.00–200.00 Hz	20.00
✓	10-31	MSI motor control current compensation command	0–150% rated current of the motor	40
✓	10-32	Speed Estimator Bandwidth	0.00–600.00 Hz	5.00
✓	10-34	Speed Estimator Low-pass Filter Gain	0.00–655.35	1.00
✓	10-37	PM Sensorless Control bit	0000h–FFFFh	0000
✓	10-39	MSI Motor Control Current Compensation Frequency Point	0.00–599.00 Hz	15.00
✓	10-40	Switch Point for Low-Speed IR Voltage Frequency Compensation	0.00–599.00 Hz	20.00
✓	10-42	Initial angle detection pulse value	0.0–3.0	1.0
✓	10-49	Zero Voltage Time During Start-up	00.000–60.000 sec.	00.000
✓	10-51	Injection Frequency	0–1200 Hz	500
✓	10-52	Injection Magnitude	0.0~200.0 V	30.0
✓	10-53	Angle Detection Method	0: Disabled 1: Force attracting the rotor to zero degree 2: High frequency injection 3: Pulse injection	0
✓	10-54	Rated Rotational Speed Compensation Percentage	0–1000 %	100
✓	10-55	High Rotational Speed Compensation Percentage	0–1000 %	100
✓	10-56	Low Speed Voltage Feedforward Percentage	0–150 %	100

11 Advanced Parameters

Pr.	Parameter Name	Settings	Default
11-00	System Control	bit 3: Dead time compensation closed bit 7: Save or do not save the frequency	0
11-41	PWM Mode Selection	0: Two-phase modulation mode 2: Space vector modulation mode	0
11-42	System control flag	0000–FFFFh	0000

12 Function Parameters

	Pr.	Parameter Name	Settings	Default
✓	12-00	Set Point Deviation Level	0–50%	0
✓	12-01	Detection Time of Set Point Deviation Level	1–9999 sec.	10
✓	12-02	Offset Level of Low Water Consumption	0–50%	10
✓	12-03	Offset Level of High Water Consumption	0: No Function 0–100%	0
✓	12-04	High Water Consumption Delay Time	0: No function 0.1–10.0 sec.	0.5
	12-06	Color of LCD	0: ● Blue: running, MP300 is outputting frequency ● Green: standby, MP300 powers ON without any errors 1: ● Blue: standby, MP300 powers ON without any errors ● Green: running, MP300 is outputting frequency	0
	12-07	Disallowed from Outputting	0: Disabled 1: PWM output is OFF (display a warning called NOut)	0
✓	12-08	Frequency to Start Switching Pumps	0–the maximum operation frequency	Max. Operation Frequency
✓	12-09	Time Detected When Pump Reaches the Starting Frequency	0.0–3600.0 sec.	1.0
✓	12-10	Pump Switching Stop Frequency	0.00~Maximum operation frequency (Pr.01-00) Hz	80.00
✓	12-12	Pump's Frequency at Time-Out (Disconnection)	0.00–599.0 Hz	0.00
	12-13	Pump's Error Treatment	bit 0: When the operating pump is failed, whether switch to the substitute pump or not 0: Stop all pumps' action 1: Switch to an alternative pump bit 1: During the operation, stop or standby after resetting from error 0: Standby after resetting 1: Stop after resetting bit 2: Before the operation, whether the system can run or not if the pump has an error 0: The system cannot activate the operation 1: The system selects another pump to operate	1
	12-14	Selection of pump start-up sequence	0: According to the serial numbers of the pumps 1: According to the operating time	1
	12-18	Cavitation Detection Method	bit 0–3 00x0h: not using cavitation 00x1h: use AI1 to flow 00x2h: use flow estimation Q-H method	0

	Pr.	Parameter Name	Settings	Default
			bit 4–7 000xh: no warning when cavitation 001xh: warning when cavitation, but continue operating	
	12-19	Cavitation Detection Tolerance	0.00–655.00	1.00
	12-20	Flow Estimation Method	0: not using 1: Q-H method 2: P-Q method	1
	12-21	Accumulated Flow-Units Digit	0–999.9 m^3 (read only)	Read only
	12-22	Accumulated Flow-Thousands Digit	0–65535 km^3 (read only)	Read only
	12-23	Reset accumulated flow immediately	0: not reset 1: When powering the AC motor drive on, reset volume flow 2: Reset volume flow	0
✓	12-24	Diameter of The Pump Inlet	5.0–6500.0 mm	0.0
✓	12-25	Diameter of The Pump Outlet	5.0–6500.0 mm	0.0
✓	12-26	The Rated Rotation Speed of Pump	0–65535 rpm	3000
✓	12-27	Fluid Density	0.0–6550.0 kg/m^3	995.7
✓	12-28	Fluid Temperature During Operation	0.00–600.00°C	30.00
✓	12-29	Height Difference of Inlet / Outlet Pump Pressure Sensor	-30.00–30.00 m	0.00
✓	12-30	Pump Curve Head 1	0.00–655.00 m	0.00
✓	12-31	Pump Curve Head 2	0.00–655.00 m	0.00
✓	12-32	Pump Curve Head 3	0.00–655.00 m	0.00
✓	12-33	Pump Curve Head 4	0.00–655.00 m	0.00
✓	12-34	Pump Curve Head 5	0.00–655.00 m	0.00
✓	12-35	Pump Curve Flow 1	0.00–655.00 m^3/hr	0.00
✓	12-36	Pump Curve Flow 2	0.00–655.00 m^3/hr	0.00
✓	12-37	Pump Curve Flow 3	0.00–655.00 m^3/hr	0.00
✓	12-38	Pump Curve Flow 4	0.00–655.00 m^3/hr	0.00
✓	12-39	Pump Curve Flow 5	0.00–655.00 m^3/hr	0.00
✓	12-40	Pump Curve Point 1 Power	0.00–655.35 kW	0.00
✓	12-41	Pump Curve Point 2 Power	0.00–655.35 kW	0.00
✓	12-42	Pump Curve Point 3 Power	0.00–655.35 kW	0.00
✓	12-43	Pump Curve Point 4 Power	0.00–655.35 kW	0.00
✓	12-44	Pump Curve Point 5 Power	0.00–655.35 kW	0.00
✓	12-45	Pump curve 1 Npshr	0.00–655.00 m	0.00
✓	12-46	Pump curve 2 Npshr	0.00–655.00 m	0.00
✓	12-47	Pump curve 3 Npshr	0.00–655.00 m	0.00
✓	12-48	Pump curve 4 Npshr	0.00–655.00 m	0.00
✓	12-49	Pump curve 5 Npshr	0.00–655.00 m	0.00
	12-50	Cycle Time Selection	0: No Function 1: Absolute time 2: Fixed time	2

Pr.	Parameter Name	Settings	Default
12-51	Multi-pump's Real Time Circulation Period	00:00~23:59	00:00
12-52	Multi-pump's Fixed Time Circulation Period	0.0–3000.0 hours	5.0
12-53	Clean Function	0: Disabled 1: Enabled (trigger the clean function when DI works) 2: Enabled (trigger the clean function when current exceeds stall current and the operation is restricted) 3: Enabled (trigger the clean function when the counting time is up)	0
12-54	Stall Current Setting Value	0– the smallest one of Pr.06-03 and Pr.06-04	120
12-55	Stall Current Delay Time	0.0–300.0 sec.	60.0
12-56	Auto Clean Day	0: Sunday 1: Monday 2: Tuesday 3: Wednesday 4: Thursday 5: Friday 6: Saturday	0
12-57	Cleaning Time of a Day	00:00~23:59	00:00
12-58	Cleaning Cycle Times	1–30	5
12-59	Clean Forward Frequency	0.00–50.00 Hz	40.00
12-60	Clean Forward Time	0.0–300.0 sec.	2.0
12-61	Clean Reverse Frequency	0.00–50.00 Hz	40.00
12-62	Clean Reverse Time	0.0–300.0 sec.	2.0
12-63	Cleaning Acceleration Time	1.0–300.0 sec.	1.0
12-64	Cleaning Deceleration Time	1.0–300.0 sec.	1.0
12-65	Load Auto-tuning Curve	0: Disabled 1: Enabled	0
12-66	50% power consumption point	0–65535 kW	0
12-67	100% power consumption point	0–65535 kW	0
12-68	Dry Pump Function	0: Disabled 1: Enabled	0
12-69	Dry Pump Check Time	0–300.0 sec.	15.0
12-70	Dry Pump Restart Delay Time	0–1000 min.	30
12-71	Number of Restart Times Limitation of Dry Pump	0–20	5
12-72	The Treatment of Dry Pump Fault	1: Fault and coast to stop 2: Fault and ramp to stop	1
12-73	Heavy Water Leakage Abnormal Pressure Detection	0: No Function 1–50%	15
12-74	Heavy Water Leakage Abnormal Detection Time	0.1–300.0 sec.	15.0
12-75	Heavy Water Leakage Load Setting	0–100%	20

	Pr.	Parameter Name	Settings	Default
	12-76	Heavy Water Leakage Treatment	0: Warn and continue operation 1: Fault and coast to stop 2: Fault and ramp to stop	0
	12-77	Sleep Boost Pressure Setting	0–50%	0
	12-78	Sleep Boost Pressure Delay Time	0.0–600.0 sec.	10.0
	12-79	Level Of High Pressure Alarm	0: No Function 0–50%	25
	12-80	High Pressure Time Delay	0.1–300.0 sec.	5.0
	12-81	High Pressure Alarm Treatment	1: Fault and coast to stop 2: Fault and ramp to stop	1
	12-82	Level of Low Pressure Alarm	0: No Function 0–50%	25
	12-83	Low Pressure Time Delay	0.1–300.0 sec.	5.0
	12-84	Low Pressure Alarm Treatment	0: Warn and continue operation 1: Fault and coast to stop 2: Fault and ramp to stop	1
	12-88	Dry Pump Detection Tolerance	0–50%	10
✓	12-93	Year Setting	2022–2099	2022
✓	12-94	Date Setting	1.01–12.31	1.01
✓	12-95	Time Setting	00:00~23:59	00:00
✓	12-96	Week Setting	0: Sunday 1: Monday 2: Tuesday 3: Wednesday 4: Thursday 5: Friday 6: Saturday	0

13 Macro / User-defined Macro

Pr.	Parameter Name	Settings	Default
13-00	Macro Selection	00: Disabled 01: User-defined	00
13-01 – 13-50	Application Parameters (User-defined)		

14 Protection Parameters (2)

Pr.	Parameter Name	Settings	Default
14-50	Output Frequency at Malfunction 2	0.00–599.00 Hz	Read only
14-51	DC bus Voltage at Malfunction 2	0.0–6553.5 V	Read only
14-52	Output Current at Malfunction 2	0.00–655.35 Amps	Read only
14-53	IGBT Temperature at Malfunction 2	-3276.8–3276.7ºC	Read only
14-54	Output Frequency at Malfunction 3	0.00–599.00 Hz	Read only
14-55	DC bus Voltage at Malfunction 3	0.0–6553.5 V	Read only
14-56	Output Current at Malfunction 3	0.00–655.35 Amps	Read only
14-57	IGBT Temperature at Malfunction 3	-3276.8–3276.7ºC	Read only
14-58	Output Frequency at Malfunction 4	0.00–599.00 Hz	Read only
14-59	DC bus Voltage at Malfunction 4	0.0–6553.5 V	Read only
14-60	Output Current at Malfunction 4	0.00–655.35 Amps	Read only
14-61	IGBT Temperature at Malfunction 4	-3276.8–3276.7ºC	Read only
14-62	Output Frequency at Malfunction 5	0.00–599.00 Hz	Read only
14-63	DC bus Voltage at Malfunction 5	0.0–6553.5 V	Read only
14-64	Output Current at Malfunction 5	0.00–655.35 Amps	Read only
14-65	IGBT Temperature at Malfunction 5	-3276.8–3276.7ºC	Read only
14-66	Output Frequency at Malfunction 6	0.00–599.00 Hz	Read only
14-67	DC bus Voltage at Malfunction 6	0.0–6553.5 V	Read only
14-68	Output Current at Malfunction 6	0.00–655.35 Amps	Read only
14-69	IGBT Temperature at Malfunction 6	-3276.8–3276.7ºC	Read only
14-70	Fault Record 7	Refer to fault record Pr.06-17–06-22	0
14-71	Fault Record 8	Refer to fault record Pr.06-17–06-22	0
14-72	Fault Record 9	Refer to fault record Pr.06-17–06-22	0
14-73	Fault Record 10	Refer to fault record Pr.06-17–06-22	0

[This page intentionally left blank]

Chapter 12 Descriptions of Parameter Settings

12-1 Descriptions of Parameter Settings

12-2 Adjustment & Application

12-1 Descriptions of Parameter Settings

00 Drive Parameters

✓ You can set this parameter during operation.

00-00 AC Motor Drive Identity Code

Default: Read only

Settings Read only

00-01 AC Motor Drive Rated Current Display

Default: Read only

Settings Read only

📖 Pr.00-00 displays the AC motor drive identity code. Use the following specification table to check if Pr.00-01 setting is the rated current of the AC motor drive.

Pr.00-01 corresponds to the identity code of Pr.00-00.

460V models - Three-phase											
Frame	A					A / B	B	C			
Power (kW)	0.75	1.5	2.2	3	4	5.5	7.5	11	15	18.5	22
Power (HP)	1	2	3	4	5.5	7.5	10	15	20	25	30
Identity Code	404	405	406	482	483	408	409	410	411	412	413
Rated Current	1.6	3.3	4.7	6.2	8.5	11.7	15.6	24.4	31.8	39.2	45.6

📖 For the 5.5 kW / 7.5 HP models

Frame A: VFD11AMP43JNNAA, model without filter

Frame B: VFD11AMP43JFNAA, model with filter

00-02 Parameter Reset

Default: 0

Settings
- 0: No function
- 1: Write protection for parameters
- 5: Return kWh displays to 0
- 6: Reset PLC
- 8: Keypad does not respond
- 9: Reset all parameters to defaults (go back to IM V/F control, base frequency is 50 Hz, carrier frequency is 15 kHz)
- 10: Reset all parameters to defaults (go back to PMSVC control, base frequency is 150 Hz, carrier frequency is 4 kHz)
- 12: Reset all parameters to defaults (go back to PMSVC control, base frequency is 150 Hz, carrier frequency is 4 kHz, and preserve the user-defined parameter values Pr.13-01–Pr.13-50)
- 14: Reset all parameters to defaults (retain the parameter settings related to the PMSVC control)

📖 1: All parameters are read only except Pr.00-02, Pr.00-07, and Pr.00-08. Set Pr.00-02 to 0 before changing other parameter settings.

📖 5: You can return the kWh displayed value to 0 even during drive operation. For example, you can set Pr.05-26–Pr.05-30 to 0.

- 6: Clear the internal PLC program.
- During parameters reset, if you have set a password in Pr.00-08, then you must unlock the password in Pr.00-07 first and clear the password before returning to default.
- 9: Return to default, and go back to V/F control mode, the base frequency is 50 Hz, carrier frequency is 15 kHz.
- 10: Return to default, and go back to SVC control mode, the base frequency is 150 Hz, carrier frequency is 4 kHz.
- 12: Return to default, and go back to SVC control mode, the base frequency is 150 Hz, carrier frequency is 4 kHz. User-defined parameters Pr.13-01–Pr.13-50 and their settings will not be reset.
- For the setting of 9, 10 and 12, you must reboot the motor drive after you finish the setting.

00-03 Start-up Display

Default: 4

Settings
0: F (frequency command)
1: H (output frequency)
2: U (user-defined) see Pr.00-04
3: A (output current)
4: P (display the setting value and the feedback of PID control)

- Determine the start-up display page after power is applied to the drive. The user-defined contents display according to the Pr.00-04 settings.

00-04 Content of Multi-function Display (User-Defined)

Default: 7

Settings
0: Display output current (A) (Unit: Amp)
1: Display counter value (c) (Unit: CNT)
2: Display the drive's actual output frequency (H.) (Unit: Hz)
3: Display the drive's DC bus voltage (v) (Unit: V_{DC})
4: Display the drive's output voltage (E) (Unit: V_{AC})
5: Display the drive's output power angle (n) (Unit: deg)
6: Display the drive's output power (P) (Unit: kW)
7: Display the motor speed (r) (Unit: rpm)
11: Display AI1 analog input terminal signal (1.) (Unit: %)
12: Display AI2 analog input terminal signal (2.) (Unit: %)
14: Display the drive's IGBT temperature (i.) (Unit: ºC)
15: Display the drive's internal temperature (c.) (Unit: ℃)
16: The digital input status (ON / OFF) (i)
17: The digital output status (ON / OFF) (o)
18: Display multi-step speed (S)
19: The corresponding CPU digital input pin status (d)
20: The corresponding CPU digital output pin status (0.)
25: Overload count (0.00–100.00%) (o.) (Unit: %)
26: Ground Fault GFF (G.) (Unit: %)
27: DC bus voltage ripple (r.) (Unit: V_{DC})

28: Display PLC register D1043 data (C)
30: Display the output of User-defined (U)
31: Display Pr.00-05 user gain (K)
36: Present operating carrier frequency of the drive (J.) (Unit: Hz)
38: Display the drive status (6.) (See Explanation 5)
41: kWh display (J) (Unit: kWh)
49: Display the motor's temperature (M) (PTC-130, KTY84-130)
51: PMSVC torque offset (T.)
60: Display the setting value and the feedback of PID control (P)
65: Accumulated motor operation record (day) (r.) (Refer to Pr.05-32)
112: Estimated flow rate (F) (Unit: m^3/hr)
113: Display the inlet pressure (I) (Unit: according to Pr.00-38 setting)
114: Display the outlet pressure (O) (Unit: according to Pr.00-25 setting)
115: Cavitation detection index (V) (See Pr.12-18 for more details)

Explanation 1

- Setting value 11, 12: display the percentage corresponds to AI1, AI2, and 0–10 V / 0–20 mA / 4–20 mA correspond to 0.00–100.00%.
- It can also display negative values when setting analog input bias (Pr.03-03–03-10).
  Example:
  Assume that AI1 input voltage is 0 V, Pr.03-03 is 10.0%, Pr.03-07 is 4 (Bias serves as the center).

Explanation 2

If MI1 and MI4 are ON, the following table shows the status of the terminals.

Normally opened contact (N.O.): (0: OFF, 1: ON)

Terminal	MI4	MI3	MI2	MI1
Status	1	0	0	1

- The value is 0000 0000 0000 1001 in binary system. And converts to 0009H in hexadecimal system. When Pr.00-04 is set to 16 or 19, the u page on the keypad displays 0009h.
- The setting 16 is the ON / OFF status of digital input according to Pr.02-12 setting and the setting 19 is the corresponding CPU pin ON / OFF status of the digital input.
- When MI1 / MI2 default setting is two-wire / three-wire operation control (Pr.02-00 ≠ 0), and MI3 is set to three-wire, it is not affected by Pr.02-12.
- You can set 16 to monitor the digital input ON / OFF status, and then set 19 to check if the circuit is normal.

Explanation 3

Example: Assume that RY: Pr.02-13 is set to 9 (Drive is ready). After powering the drive on, if there is no other abnormal status, the contact is close. The display status is shown below.

Normally opened contact (N.O.):

Terminal	MO	RY2	RY1
Status	0	0	1

- If Pr.00-04 is set to 17 or 20, it displays in hexadecimal “0001h” with LED u page is ON in the keypad.
- The setting 17 is the ON / OFF status of digital output according to Pr.02-18 setting and the setting 20 is the corresponding CPU pin ON / OFF status of the digital output.
- You can set 17 to monitor the digital output ON / OFF status, and then set 20 to check if the circuit is normal.

Explanation 4

- Setting value 25: when displayed value reaches 100.00%, the drive shows “oL” as an overload warning.

Explanation 5

- Setting value 38:

bit 0: The drive is running forward.	bit 3: Errors occurred on the drive.
bit 1: The drive is running backward.	bit 4: The drive is running.
bit 2: The drive is ready.	bit 5: Warnings occurred on the drive.

Explanation 6

- Setting value 60:

  Read from left to right, the second and the third digit display the maximum target value, and it’s limited by Pr.00-26 setting; the fourth and the fifth digit display pressure feedback value. Users can use the UP / DOWN button on the keypad to adjust the maximum target value.

  Example: In water pump system, the maximum target value is 4 bar, and the maximum range can be detected by the pressure sensor is 10 bar. Set Pr.00-25 = 353 to define the unit as bar and in one decimal place; set Pr.00-26 = 10.0 to define the maximum pressure to be 10 bar. And then use keypad to adjust the second and the third digit from 10 to 4, finish the setting of the target value.

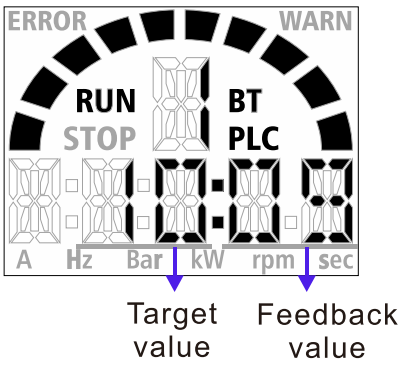

Explanation 7

- Setting value 113, 114: Set pressure unit in Pr.00-38 and Pr.00-25, otherwise the display shows 0.
- The pressure unit: 003xh: kg/cm^2, 015xh: mbar, 016xh: bar, 017xh: Pa, 018xh: kPa, 0x19xh: mWG, 0x1Axh: inWG, 0x1Bxh: ftWG, 01Cxh: psi

00-05 Coefficient Gain in Actual Output Frequency

Default: 1.00

Settings	0.00–160.00

- Sets the user-defined unit coefficient gain. Set Pr.00-04 = 31 to display the calculation result on the screen (calculation = output frequency * Pr.00-05).

00-06 Firmware Version

Default: Read only

Settings	Read only

00-07 Parameter Protection Password Input

Default: 0

Settings	0–65535
Display	0–4 (the number of password attempts)

- Pr.00-07 and Pr.00-08 are used to prevent personnel from setting other parameters by accident.
- This parameter allows you to enter your password (which is set in Pr.00-08) to unlock the parameter protection and to make changes to the parameter.
- To avoid problems in the future, be sure to write down the password after you set this parameter.
- If you forget the password, clear the password setting by entering 9999 and pressing the ENTER key, then enter 9999 again and press ENTER within 10 seconds. After decoding, all the settings return to default.
- When setting is under password protection, all the parameters read 0, except Pr.00-08.

00-08 Parameter Protection Password Setting

Default: 0

Settings	0–65535
Display	0: No password protection or password is entered correctly (Pr.00-07)
	1: Password has been set

- This parameter is for setting the password protection. Password can be set directly the first time. After you set the password, the value of Pr.00-08 is 1, which means password protection is activated. At this time, if you want to change any of the parameter settings, you must enter the correct password in Pr.00-07 to deactivate the password temporarily, and this would make Pr.00-08 become 0. After you finish setting the parameters, reboot the motor drive and the password is activated again.
- Entering the correct password in Pr.00-07 only temporarily deactivates the password. To permanently deactivate password protection, set Pr.00-08 to 0 manually. Otherwise, password protection is always reactivated after you reboot the motor drive.
- The keypad copies function works only when the password protection is deactivated (temporarily or permanently), and the password set in Pr.00-08 cannot be copied to the keypad. So when copying parameters from the keypad to the motor drive, set the password manually again in the motor drive to activate password protection.

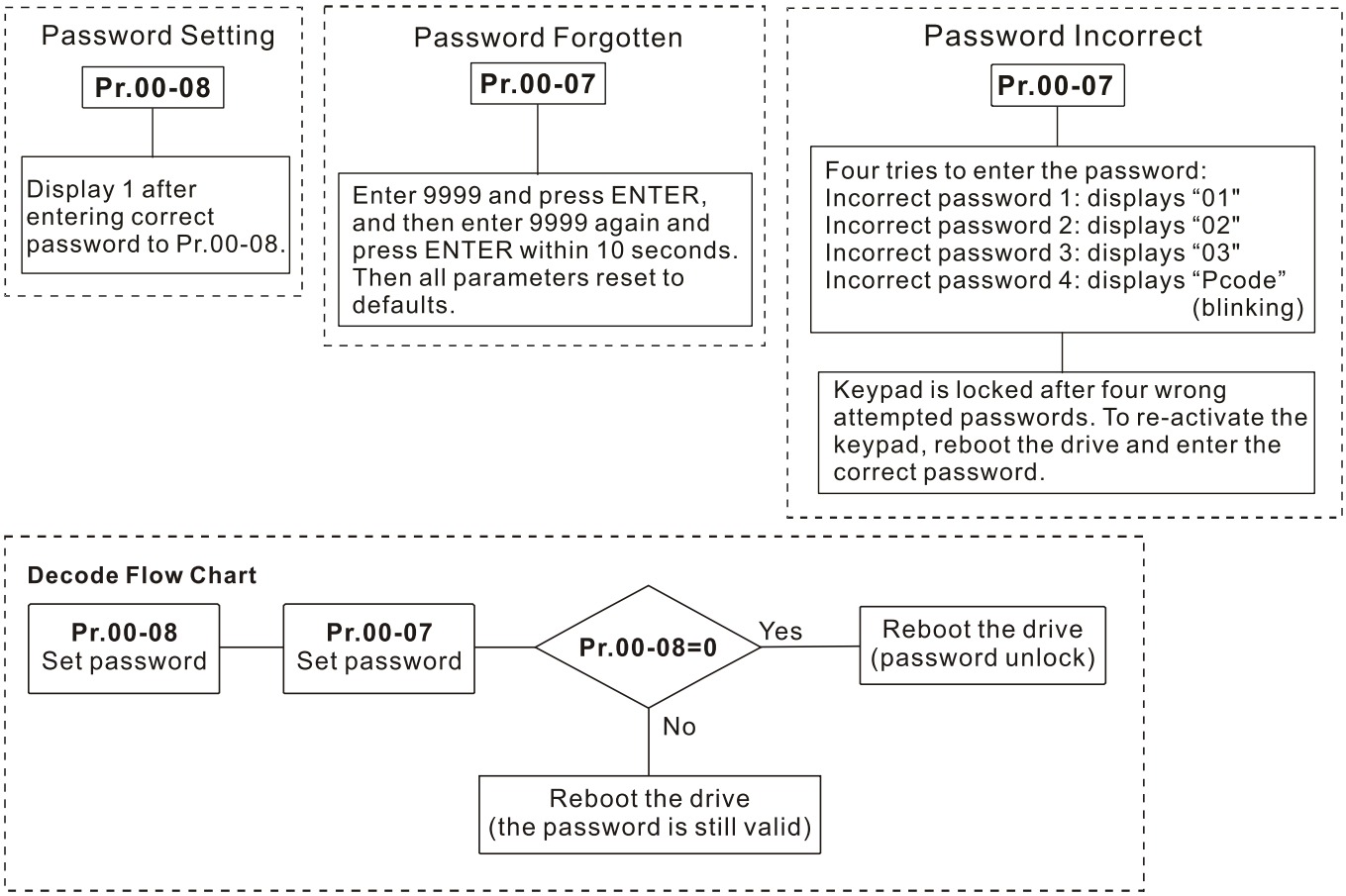

00-11 Speed Control Mode

Default:
If Pr.00-02 = 9, then the default is 0; if Pr.00-02 = 10 or 12, then the default is 2

Settings 0: IMVF (IM V/F control)
2: PM SVC (PM space vector control)

Determine the control mode of the AC motor drive:

0: IM V/F control, you can set the proportion of V/F as required and control multiple motors simultaneously.

2: PM space vector control, gets the optimal control by auto-tuning the motor parameters.

📖 Pr.00-11 = 0, the V/F control diagram is as shown below:

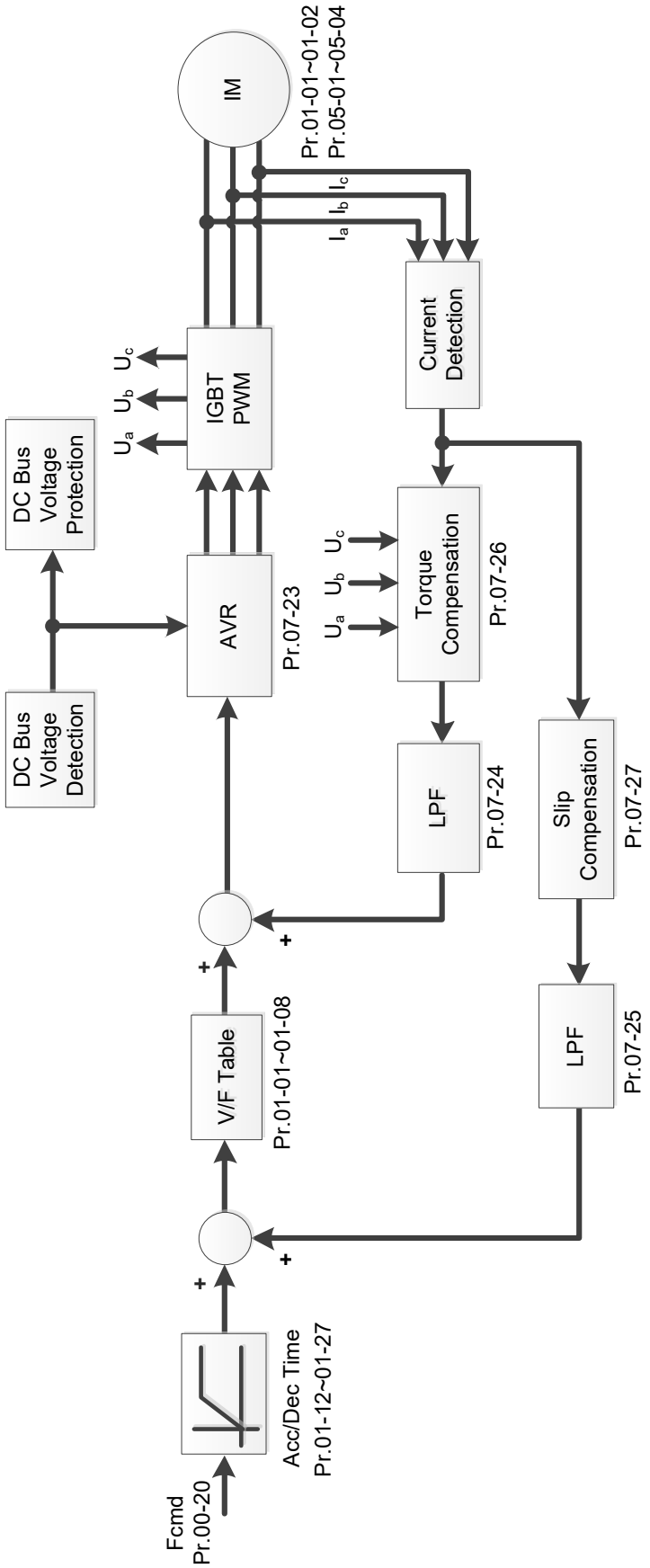

Pr.00-11 = 2, the space vector control diagram is as shown below:
PM space vector control (PMSVC):

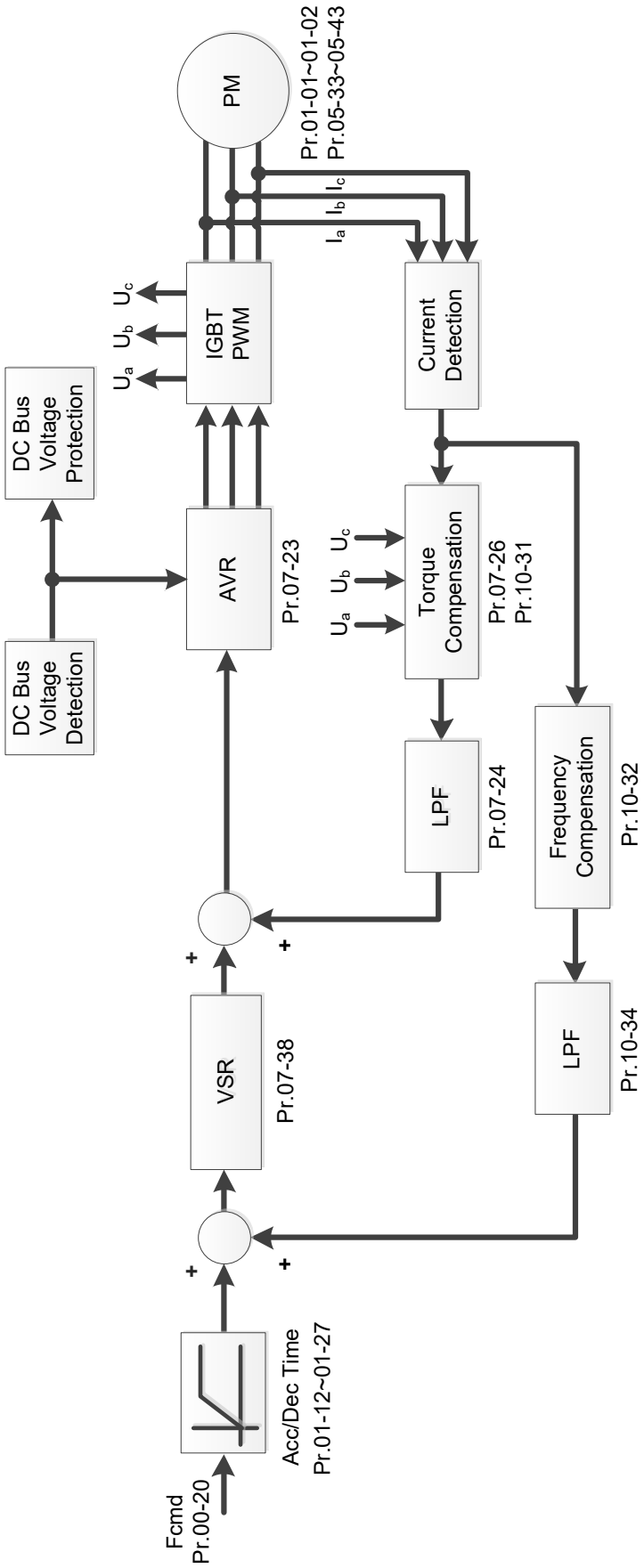

00-17 Carrier Frequency

Default: 15

Settings 2–15 kHz

Determines the PWM carrier frequency for the AC motor drive.

Models	Model	Settings	Normal Duty Default
460V	1–30 HP [0.75–22 kW]	02–15 kHz	4 kHz

Carrier Frequency	Acoustic Noise	Electromagnetic Noise or Leakage Current	Heat Dissipation	Current Wave
2 kHz	Significant	Minimal	Minimal	
8 kHz				
15 kHz	Minimal	Significant	Significant	

From the table, you see that the PWM carrier frequency has significant influences on the electromagnetic noise, From the table, you see that the PWM carrier frequency has significant influences on the electromagnetic noise, the AC motor drive heat dissipation, and the motor acoustic noise. Therefore, if the surrounding noise is greater than the motor noise, lower the carrier frequency to reduce the temperature rise. Although the motor has quiet operation in the higher carrier frequency, consider the entire wiring and interference.

When the carrier frequency is higher than the default, decrease the carrier frequency to protect the drive. Refer to Pr.06-55 for the related setting and details.

00-19 PLC Command Mask

Default: Read only

Display value
bit 0: Control command is forced by PLC control
bit 1: Frequency command is forced by PLC control

Determines if the frequency command or control command is locked by PLC.

00-20 Master frequency command source (AUTO, REMOTE)

Default: 0

Settings
0: Digital keypad
1: RS-485 communication (COM1)
2: External analog input (Refer to Pr.03-00)
3: External UP / DOWN terminal (multi-function input terminals)
8: Communication card (does not include CANopen card)
NOTE: HOA (Hand-Off-Auto) function is valid only when this parameter uses with MO function setting 42 and 56.

Determines the master frequency source in the “AUTO, REMOTE “mode. The default is AUTO mode.

You can switch the AUTO, REMOTE modes with the multi-function input terminal (MI) to set the master frequency source.

- It returns to AUTO or REMOTE mode whenever you cycle the power. If you use a multi-function input terminal to switch between HAND (LOCAL) and AUTO (REMOTE) mode, the highest priority is the multi-function input terminal.
- If the built-in PLC function is ON, refer to Pr.04-57 details for the settings of Pr.00-20 and Pr.00-21.

00-21 Operation command source (AUTO, REMOTE)

Default: 0

Settings 0: Digital keypad
1: External terminals
2: RS-485 communication (COM1)
5: Communication card (does not include CANopen card)
NOTE: HOA (Hand-Off-Auto) function is valid only when this parameter uses with MO function setting 42 and 56.

- Determines the operation frequency source in the “AUTO, REMOTE” mode.
- In the HOA mode, if the multi-function input terminal (MI) function setting 41 and 42 are OFF, the drive does not receive any operation command and JOG is invalid.
- If the built-in PLC function is ON, refer to Pr.04-57 details for the settings of Pr.00-20 and Pr.00-21.

00-22 Stop method

Default: 0

Settings 0: Ramp to stop
1: Coast to stop

- Determine how the motor is stopped when the AC motor drive receives the Stop command.

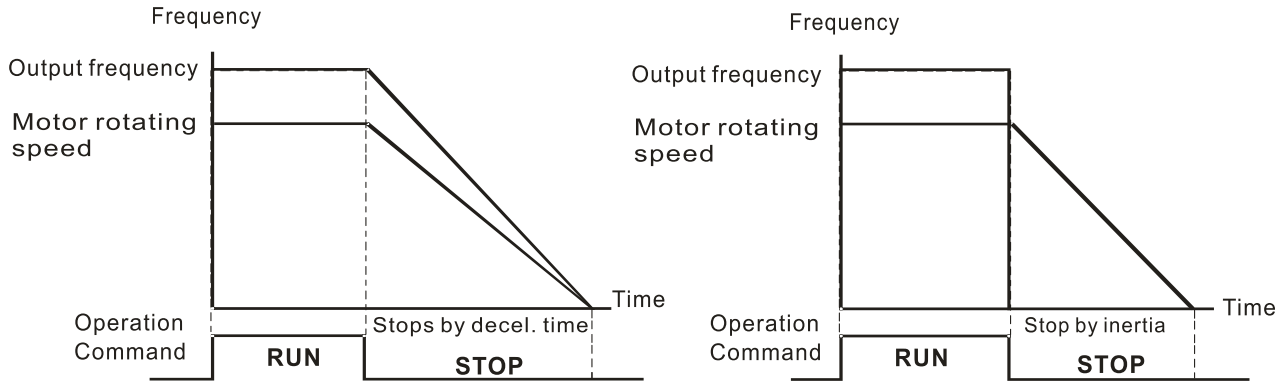

Ramp to Stop and Coast to Stop

1. Ramp to stop: According to the set deceleration time, the AC motor drive decelerates to 0 Hz or the minimum output frequency (Pr.01-07), and then stop.
2. Coast to stop: According to the load inertia, the AC motor drive stops output immediately, and the motor coasts to stop.
   - Use “ramp to stop” for the safety of personnel or to prevent material from being wasted in applications where the motor must stop immediately after the drive stops. You must set the deceleration time accordingly.

00-23 Motor Direction Control

Default: 0

Settings 0: Enable forward / reverse
1: Disable reverse
2: Disable forward

This parameter can prevent the equipment to be broken from a malfunction caused by the forward and reverse rotation of the motor. To limit the motor to run in the forward or reverse direction when only one running direction is allowed for the motor load.

Refer to Pr.00-47 for the definition of motor running direction, and refer to Chapter 5 for schematic diagram of motor running direction.

00-24 Digital Operator (Keypad) Frequency Command Memory

Default: Read only

Settings Read only

If the keypad is the frequency command source, when Lv or fault occurs, this parameter stores the current frequency command.

00-25 User-defined Characteristics 1

Default: 353

Settings bit 0–3: user-defined decimal places
0000h-0000b: no decimal place
0001h-0001b: one decimal place
0002h-0010b: two decimal places
0003h-0011b: three decimal places
bit 4–15: user-defined unit
000xh: Hz
001xh: rpm
002xh: %
003xh: kg/cm^2
004xh: m/s
005xh: kW
006xh: HP
007xh: PPM
008xh: 1/m
009xh: kg/s
00Axh: kg/m
00Bxh: kg/h
00Cxh: lb/s
00Dxh: lb/m
00Exh: lb/h
00Fxh: ft/s
010xh: ft/m

011xh: m
012xh: ft
013xh: degC
014xh: degF
015xh: mbar
016xh: bar
017xh: Pa
018xh: kPa
019xh: mWG
01Axh: inWG
01Bxh: ftWG
01Cxh: psi
01Dxh: atm
01Exh: L/s
01Fxh: L/m
020xh: L/h
021xh: m3/s
022xh: m3/h
023xh: GPM
024xh: CFM
xxxxh: Hz

- User-defined characteristic 1 is applicable to the setting of AI1 and the system; user-defined characteristic 2 is applicable to be inlet pressure only when Pr.03-01=22.
- The default is in one decimal place (xxx1h), and the unit is bar (016xh). 0161h in hexadecimal system equals 353 in decimal system, so set Pr.00-25 to 353 via the keypad will be succeed.
- When Pr.03-00=21 (the outlet pressure), the unit of Pr.00-25 should be the pressure unit, otherwise the function cannot work correctly.
- When Pr.03-00=23 (the input flow), the unit of Pr.00-25 should be the flow unit, otherwise the function cannot work correctly.
- bit 0~3: The displayed units for the control frequency F page and user-defined (Pr.00-04 = d10, PID feedback), and the displayed number of decimal places for Pr.00-26 (support up to three decimal places).
- bit 4~15: The displayed units for the control frequency F page, user-defined (Pr.00-04 = 10, PID feedback) and Pr.00-26.

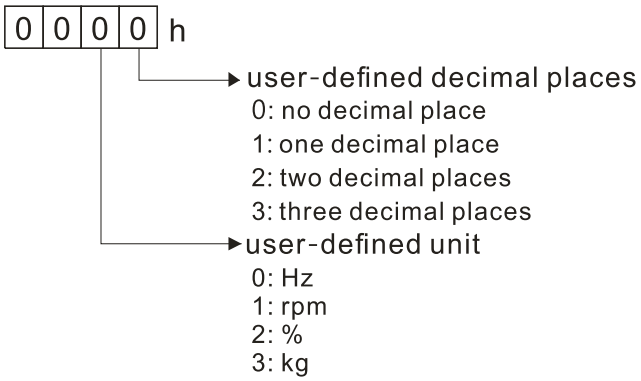

- You must convert the setting value to decimal system when using the keypad to set parameters. Example: Assume that the user-defined unit is inWG and user-defined decimal place is the third decimal point.
  According to the information above, the corresponding unit to inWG is 01Axh (x is the set decimal point), and the corresponding unit to the third decimal place is 0003h, then inWG and the third decimal point displayed in hexadecimal is 01A3h, that is 419 in decimal system. Thus, set Pr.00-25 = 419 to complete the setting.
- The unit conversion table of pressure
  Refer to the table below to set the corresponding decimal value according to the unit and the decimal point.
  For example, if it's two decimal points and the unit is bar, then set Pr.00-25 = 354.

	003xh: kg/cm^2	015xh: mbar	016xh: bar
0000h no decimal place	Hex: 0030h Decimal: 48	Hex: 0150h Decimal: 336	Hex: 0160h Decimal: 352
0001h one decimal place	Hex: 0031h Decimal: 49	Hex: 0151h Decimal: 337	Hex: 0161h Decimal: 353
0002h two decimal places	Hex: 0032h Decimal: 50	Hex: 0152h Decimal: 338	Hex: 0162h Decimal: 354
0003h three decimal places	Hex: 0033h Decimal: 51	Hex: 0153h Decimal: 339	Hex: 0163h Decimal: 355

00-26 Maximum User-defined Value 1

Default: 0

Settings 0: No function
0–99 (when Pr.00-25 is set to no decimal place)
0.0–99.9 (when Pr.00-25 is set to one decimal place)
0.00–99.99 (when Pr.00-25 is set to two decimal places)
0.000–30.000 (when Pr.00-25 is set to three decimal places)

- Pr.00-26 only can be set when PLC1 mode.
- When Pr.00-26 is NOT 0, the user-defined value is enabled. After selecting the displayed unit and number of decimal places with Pr.00-25, the setting value of Pr.00-26 corresponds to Pr.01-00 (drive's maximum operating frequency).
  Note: Set Pr.00-25 before using Pr.00-26. After you finish setting, when Pr.00-26 is not 0, the display(F) on the keypad shows correctly according to Pr.00-25 settings.

00-38 User-defined Characteristics 2

Default: 353

Settings bit 0–3: user-defined decimal places
0000h-0000b: no decimal place
0001h-0001b: one decimal place
0002h-0010b: two decimal places
0003h-0011b: three decimal places

bit 4–15: user-defined unit

003xh: kg/cm^2

015xh: mbar

016xh: bar

017xh: Pa

018xh: kPa

019xh: mWG

01Axh: inWG

01Bxh: ftWG

01Cxh: psi

01Dxh: atm

- User-defined characteristic 1 is applicable to the setting of AI1 and the system; user-defined characteristic 2 is applicable to be inlet pressure only when Pr.03-01=22.
- When Pr.03-01=22 (the inlet pressure), the unit of Pr.00-38 should be the pressure unit, otherwise the function cannot work correctly.
- The default is in one decimal place (xxx1h), and the unit is bar (016xh). 0161h in hexadecimal system equals 353 in decimal system, so set Pr.00-38 to 353 via the keypad will be succeed.
- You must convert the setting value to decimal system when using the keypad to set parameters.
- The unit conversion table of pressure

  Refer to the table below to set the corresponding decimal value according to the unit and the decimal point.

  For example, if it's two decimal points and the unit is bar, then set Pr.00-25 = 354.

	003xh: kg/cm^2	015xh: mbar	016xh: bar
0xx0h no decimal place	Hex: 0030h Decimal: 48	Hex: 0150h Decimal: 336	Hex: 0160h Decimal: 352
0xx1h one decimal place	Hex: 0031h Decimal: 49	Hex: 0151h Decimal: 337	Hex: 0161h Decimal: 353
0xx2h two decimal places	Hex: 0032h Decimal: 50	Hex: 0152h Decimal: 338	Hex: 0162h Decimal: 354
0xx3h three decimal places	Hex: 0033h Decimal: 51	Hex: 0153h Decimal: 339	Hex: 0163h Decimal: 355

00-39 Maximum User-defined Value 2

Default: 0

Settings 0: No function

0–65535 (when Pr.00-25 is set to no decimal place)

0.0–6553.5 (when Pr.00-25 is set to one decimal place)

0.00–655.35 (when Pr.00-25 is set to two decimal places)

0.000–65.535 (when Pr.00-25 is set to three decimal places)

- Pr.00-27 displays the user-defined value when Pr.00-38 is not 0.
- Note: Set Pr.00-38 before using Pr.00-39. After you finish setting, when Pr.00-26 is not 0, the displayed unit on the keypad shows correctly according to Pr.00-38 settings [Pr.00-04=74, display the inlet pressure (I)].

00-27 User-defined Value 1

Default: Read only

Settings Read only

📖 Pr.00-27 displays the user-defined value when Pr.00-26 is not 0.

00-29 LOCAL / REMOTE Selection

Default: 0

Settings
0: Standard HOA function
1: When switching between local and remote, the drive stops.
2: When switching between local and remote, the drive runs with REMOTE settings for frequency and operating status.
3: When switching between local and remote, the drive runs with LOCAL settings for frequency and operating status.
4: When switching between local and remote, the drive runs with LOCAL settings when switched to Local and runs with REMOTE settings when switched to Remote for frequency and operating status.

📖 The default for Pr.00-29 is 0, that is, the standard HOA (Hand-Off-Auto) function. Set the AUTO and HAND frequency and operation source with Pr.00-20, 00-21 and Pr.00-30, 00-31. The external terminal function (MI) = 56 for LOC / REM mode selection is disabled when Pr.00-29=0.

📖 If Pr.00-29 is not 0, that is, Local / Remote functions. Set the REMOTE and LOCAL frequency and operation source with Pr.00-20, 00-21 and Pr.00-30, 00-31.
Set the multi-function input terminal (MI) = 56 to set the LOC / REM selection.

📖 If Pr.00-29 is not set to 0, the AUTO / HAND keys are disabled. In this case, the external terminal (MI) setting = 56 (local / remote selection) has the highest command priority.

00-30 Master frequency command source (HAND, LOCAL)

Default: 0

Settings
0: Digital keypad
1: RS-485 communication input
2: External analog input (Refer to Pr.03-00)
3: External UP / DOWN terminal (multi-function input terminals)
8: Communication card (does not include CANopen card)
Note: HOA (Hand-Off-Auto) function is valid only when you use with MO function setting 41 and 56.

📖 Determine the master frequency source in the "HAND, LOCAL" mode.

📖 You can switch the HAND, LOCAL mode with the multi-function input terminal (MI) to set the master frequency source.

📖 It returns to AUTO or REMOTE mode whenever you cycle the power. If you use a multi-function input terminal to switch between HAND (LOCAL) and AUTO (REMOTE) mode, the highest priority is the multi-function input terminal.

00-31 Operation command source (HAND, LOCAL)

Default: 0

Settings 0: Digital keypad
1: External terminals
2: RS-485 communication input
5: Communication card (does not include CANopen card)
Note: HOA (Hand-Off-Auto) function is valid only when you use with MO function setting 41 and 56.

- Determine the operation frequency source in the "HAND, LOCAL" mode.
- In the HOA mode, if the multi-function input terminal (MI) function setting 41 and 42 are OFF, the drive does not receive any operation command and JOG is invalid.

00-32 Digital Keypad STOP Function

Default: 0

Settings 0: STOP key disabled
1: STOP key enabled

- Valid when the operation command source is not the digital keypad (Pr.00-21≠ 0).
  When Pr.00-21=0, the STOP key on the digital keypad is not affected by this parameter.

00-33 RPWM Mode Selection

Default: 0

Settings 0: Disabled
1: RPWM mode 1
2: RPWM mode 2
3: RPWM mode 3

- When activate RPWM function, the carrier wave of the drive is randomly distributed according to the carrier frequency (Pr.00-17) which is at the center
- The RPWM function is applicable to all control modes.
- After activating RPWM function, decrease the shrill noise which focuses on a specific high frequency, and change the sound frequency of the motor (usually change the sound from shill to a little deep and low).
- The AC motor drive supports three kinds of RPWM modes for different applications. Each mode has its own frequency distribution, the corresponding electromagnetic noise distribution and the pitch are also different. Generally, the load bearing capacity: RPWM mode 2 > RPWM mode 1 > RPWM mode 3; the capacity of decreasing the high frequency sound: RPWM mode 3 > RPWM mode 1 > RPWM mode 2.

00-34 RPWM carrier frequency variation

Default: 0.0 kHz

Settings 0.0–4.0 kHz

- When activate RPWM function, the lowest carrier wave can be set in Pr.00-17 is 4 kHz, and the highest is 8 kHz.
- Pr.00-34 is valid only when RPWM function is activating (Pr.00-33 ≠ 0).

Example: When the carrier wave (Pr.00-17) is 4 kHz, activate RPWM function (Pr.00-33 = 1, 2, or 3), and the RPWM range (Pr.00-34) is 2.0 kHz, the output carrier wave is based on 4 kHz, the random frequency range is +/-1 kHz, thus the carrier wave changes randomly within 3 kHz to 5 kHz.

When Pr.00-17 = 4 or 8 kHz, the maximum setting value of Pr.00-34 can be 2.0 kHz (+/-1 kHz). The carrier wave range to change is as the figure shown below:

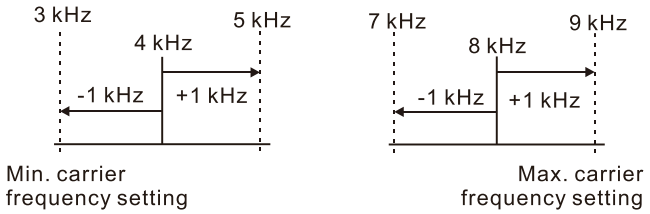

When Pr.00-17 = 5, 6, or 7 kHz, the maximum setting value of Pr.00-34 can be 4.0 kHz (+/-2 kHz). The carrier wave range to change is as the figure shown below:

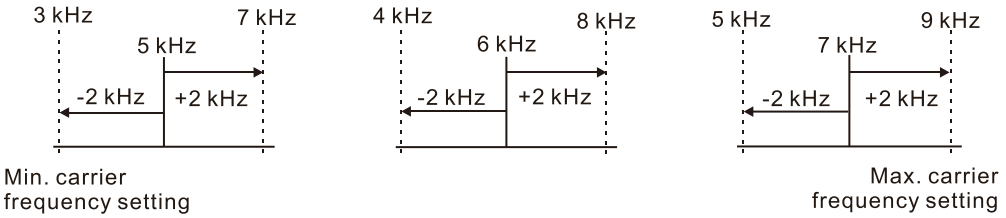

00-47 Motor Direction Setting

Default: 0

Settings 0: Motor does not change running direction
1: Motor changes running direction

This parameter can be used to change the running direction from forward to reverse or from reverse to forward, and the light don't change.

Pay more attention that the parameter influences the definition of running direction such as Pr.00-23, Pr.06-80.

Refer to Chapter 5 for schematic diagram of motor running direction

00-48 Display Filter Time (Current)

Default: 0.100

Settings 0.001–65.535 sec.

Minimize the current fluctuation displayed by the digital keypad.

00-49 Display Filter Time (Keypad)

Default: 0.100

Settings 0.001–65.535 sec.

Minimize the value fluctuation displayed by the digital keypad.

00-50 Software Version (Date)

Default: Read only

Settings Read only

Display the current drive software version by date.

00-59 Accumulated Motor Operation Time (Minutes)

Default: 0

Settings 0–1439 minutes

00-61 Accumulated Motor Operation Time (Days)

Default: 0

Settings 0–65535 days

These two parameters are used to record the time the motor runs. Start to accumulate when output frequency is larger than the minimum output frequency (Pr.01-07).

00-61 PLC Software Version

Default: Read only

Settings Read only

Display the current PLC version code of MP300.

00-62 PLC Software Release Date

Default: Read only

Settings Read only

Display the current drive software version by date.

[This page intentionally left blank]

01 Basic Parameters

You can set this parameter during operation.

01-00 Motor 1 Maximum Operation Frequency

Default:150.00

Settings 0.00–599.00 Hz

Determines the AC motor drive's maximum operation frequency. All the AC motor drive frequency command sources (analog inputs 0–10 V, 4–20 mA, 0–20 mA) are scaled to correspond to the output frequency range.

01-01 Motor 1 Rated / Base Frequency

Default:150.00

Settings 0.00–599.00 Hz

Set this parameter according to the motor's rated frequency on the motor nameplate. The motor for MPD is 150.00 Hz.

01-02 Motor 1 Rated / Base Voltage

Default:380.0

Settings 0.0–510.0 V

Set this parameter according to the rated voltage on the motor nameplate. The motor for MPD is 380.0 V

There are many motor types in the market and the power system for each country is also different. The economical and convenient solution is to install an AC motor drive. Then there is no problem using the motor with different voltage and frequency inputs, and the motor drive can improve the original motor characteristics and useful life.

01-03 Motor 1 Mid-Point Frequency 1

Default: 3.00

Settings 0.00–599.00 Hz

01-04 Motor 1 Mid-Point Voltage 1

Default: 22.0

Settings 0.0~480.0 V

01-05 Motor 1 Mid-Point Frequency 2

Default: 1.50

Settings 0.00–599.00 Hz

01-06 Motor 1 Mid-Point Voltage 2

Default: 10.0

Settings 0.0–480.0 V

01-07 Motor 1 Minimum Output Frequency

Default: 0.50

Settings 0.00–599.00 Hz

01-08 Motor 1 Minimum Output Voltage

Default: 2.0

Settings 0.0–480.0 V

- You usually set the V/F curve according to the motor's allowable loading characteristics. Pay special attention to the motor's heat dissipation, dynamic balance, and bearing lubrication when the loading characteristics exceed the loading limit of the motor.
- There is no limit for the voltage setting, but a high voltage at a low frequency may cause motor damage, overheating, and trigger the stall prevention or the over-current protection; therefore, use low voltage at low frequency to prevent motor damage or drive error.
- The V/F curve for motor 1 is as shown below.

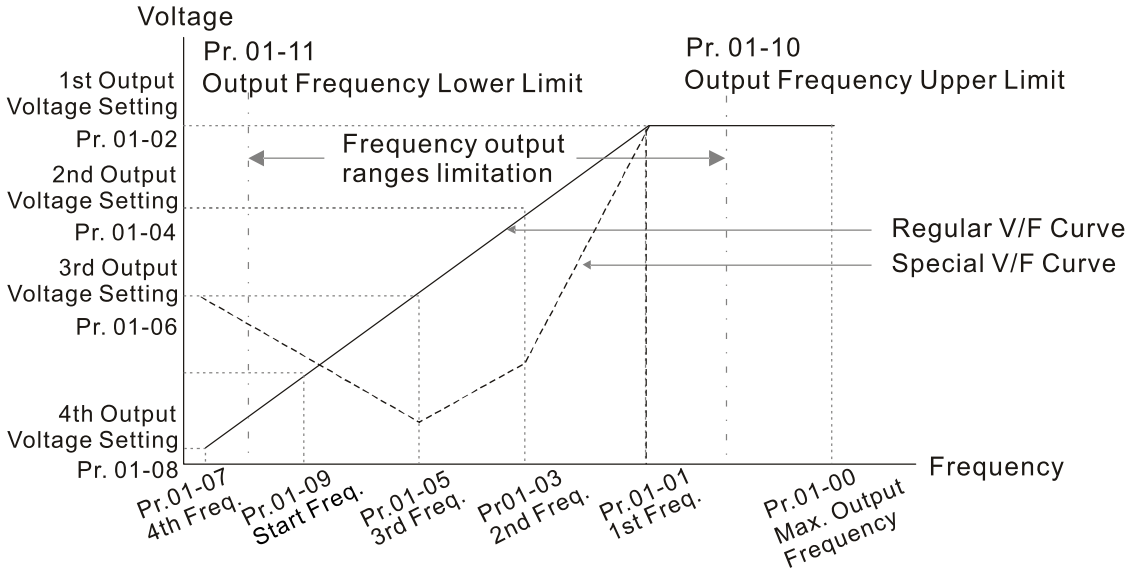

V/F Curve and The Related Parameters

- Common settings for the V/F curve

(1) General purpose

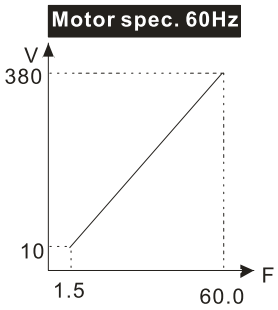

Pr.	Setting
01-00	60.0
01-01	60.0
01-02	380.0
01-03 01-05	1.50
01-04 01-06	10.0
01-07	1.50
01-08	10.0

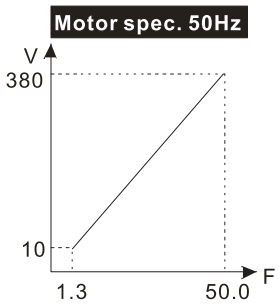

Pr.	Setting
01-00	50.0
01-01	50.0
01-02	380.0
01-03 01-05	1.30
01-04 01-06	10.0
01-07	1.30
01-08	10.0

(2) Fan and hydraulic machinery

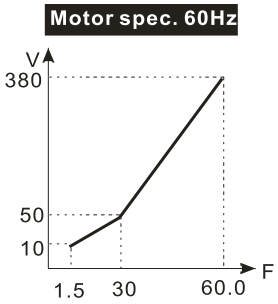

Pr.	Setting
01-00	60.0
01-01	60.0
01-02	380.0
01-03 01-05	30.0
01-04 01-06	50.0
01-07	1.50
01-08	10.0

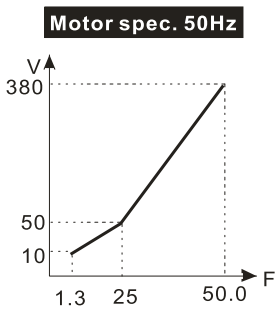

Pr.	Setting
01-00	50.0
01-01	50.0
01-02	380.0
01-03 01-05	25.0
01-04 01-06	50.0
01-07	1.30
01-08	10.0

(3) High starting torque

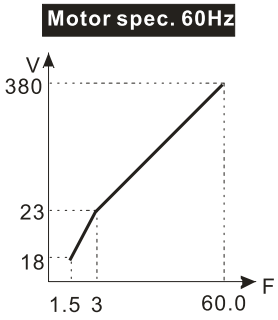

Pr.	Setting
01-00	60.0
01-01	60.0
01-02	380.0
01-03 01-05	3.00
01-04 01-06	23.0
01-07	1.50
01-08	18.0

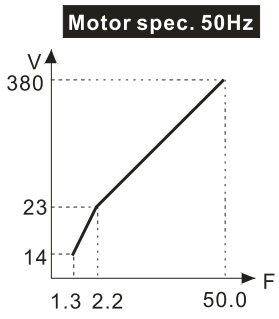

Pr.	Setting
01-00	50.0
01-01	50.0
01-02	380.0
01-03 01-05	2.20
01-04 01-06	23.0
01-07	1.30
01-08	14.0

01-09 Start-up Frequency

Default: 0.50

Settings 0.00–599.00 Hz

At the moment of the startup, the drive's frequency output starts from the start-up frequency until reaching the F command.

After starting up, if frequency command (Fcmd) > output frequency lower limit (Flow, Pr.01-11), the drive outputs according to the frequency command (Fcmd); if frequency command (Fcmd) < output frequency lower limit (Flow, Pr.01-11), the drive outputs according to the output frequency lower limit (Flow, Pr.01-11).

Refer to the figure shown below:

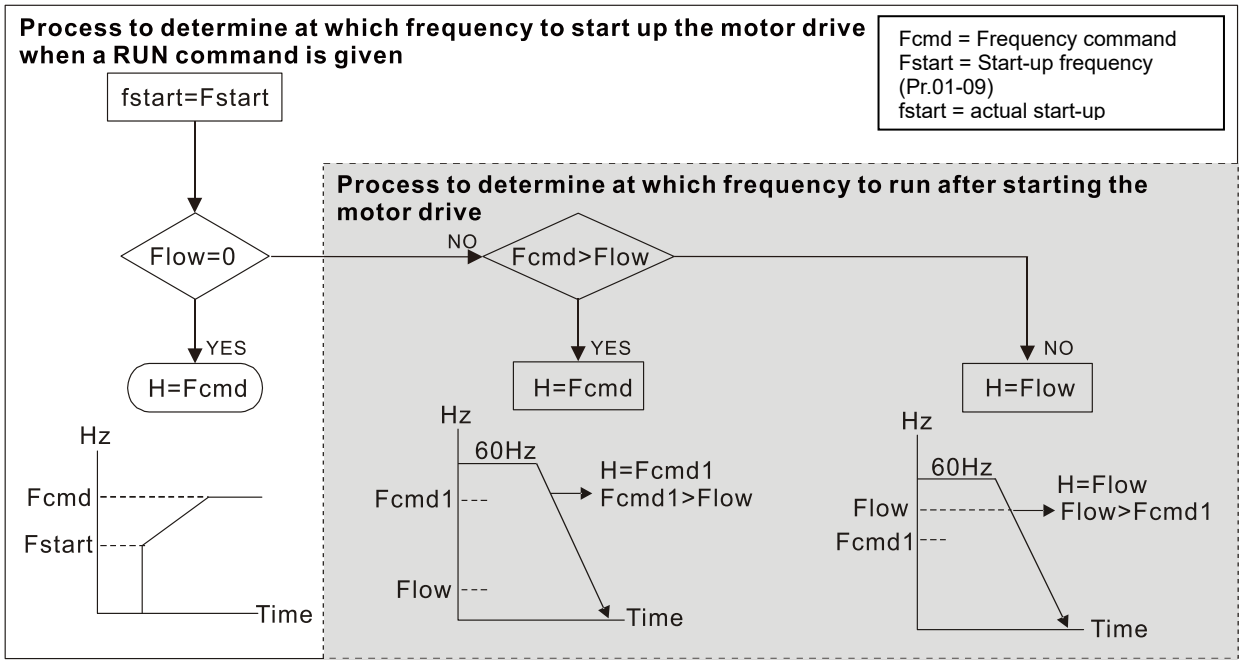

01-10 Output Frequency Upper Limit

Default: 599.00

Settings 0.00–599.00 Hz

01-11 Output Frequency Lower Limit

Default: 0.00

Settings 0.0–Pr.01-10 Hz

- Use the upper and lower limit output frequency settings to limit the actual output frequency. If the output frequency setting is higher than the upper limit (Pr.01-10), the drive runs with the upper limit frequency. If the output frequency setting is lower than the lower limit (Pr.01-11) but higher than the minimum output frequency. Set the upper limit frequency > the lower limit frequency (Pr.01-10 setting value must be > Pr.01-11 setting value).
- The upper output frequency limits the drive's maximum output frequency. If the frequency setting for the frequency command is higher than Pr.01-10, the drive runs with the Pr.01-10 setting.
- If the PID feedback control is enabled for the drive, the drive's output frequency may exceed the frequency command but is still limited by this setting.
- Related parameters: Pr.01-00 Maximum Operation Frequency, Pr.01-11 Output Frequency Lower Limit.
- The lower output frequency limits the drive's minimum output frequency. If the frequency setting for the frequency command is lower than Pr.01-11, the drive runs with the Pr.01-11 setting.
- Use the output frequency upper and lower limit settings to prevent operator misuse, overheating caused by the motor's operating at a too low frequency, or mechanical wear due to a too high speed.
- If the output frequency upper limit setting is 50 Hz and the frequency setting is 150 Hz, the maximum output frequency is 50 Hz.
- If the frequency output upper limit is 150 Hz and the frequency setting is also 150 Hz, only the Frequency command is limited at 150 Hz. The actual output frequency may be higher than 150 Hz if used for slip compensation.

01-12	Acceleration Time 1
01-13	Deceleration Time 1
01-14	Acceleration Time 2
01-15	Deceleration Time 2
01-16	Acceleration Time 3
01-17	Deceleration Time 3
01-18	Acceleration Time 4
01-19	Deceleration Time 4
01-20	JOG Acceleration Time
01-21	JOG Deceleration Time

Default: 10.00 /10.0

Settings Pr.01-45 = 0: 0.00–6000.0 sec.
Pr.01-45 = 1: 0.0–6000.0 sec.

- The acceleration time determines the time required for the AC motor drive to ramp from 0.00 Hz to the maximum operation frequency (Pr.01-00). The deceleration time determines the time required for the AC motor drive to decelerate from the maximum operation frequency (Pr.01-00) down to 0.00 Hz.
- The acceleration and deceleration time are invalid when using Pr.01-44 Auto-acceleration and Auto-deceleration Setting.

- Select the Acceleration / Deceleration Time 1, 2, 3, 4 with the multi-function input terminal settings. The defaults are Acceleration Time 1 and Deceleration Time 1.
- With the enabled torque limits and stall prevention functions, the actual acceleration and deceleration time are longer than the above action time.
- Note that set the acceleration and deceleration time too short may trigger the drive's protection function (Pr.06-03 Over-current Stall Prevention during Acceleration or Pr.06-01 Over-voltage Stall Prevention), and the actual acceleration and deceleration time are longer than this setting.
- Note that set the acceleration time too short may cause motor damage or trigger drive protection due to over-current during the drive's acceleration.
- Note that set the deceleration time too short may cause motor damage or trigger drive protection due to over-current during the drive's deceleration or over-voltage.
- When you enable Pr.01-24–Pr.01-27 (S-curve acceleration and deceleration begin and arrival time), the actual acceleration and deceleration time are longer than the setting.

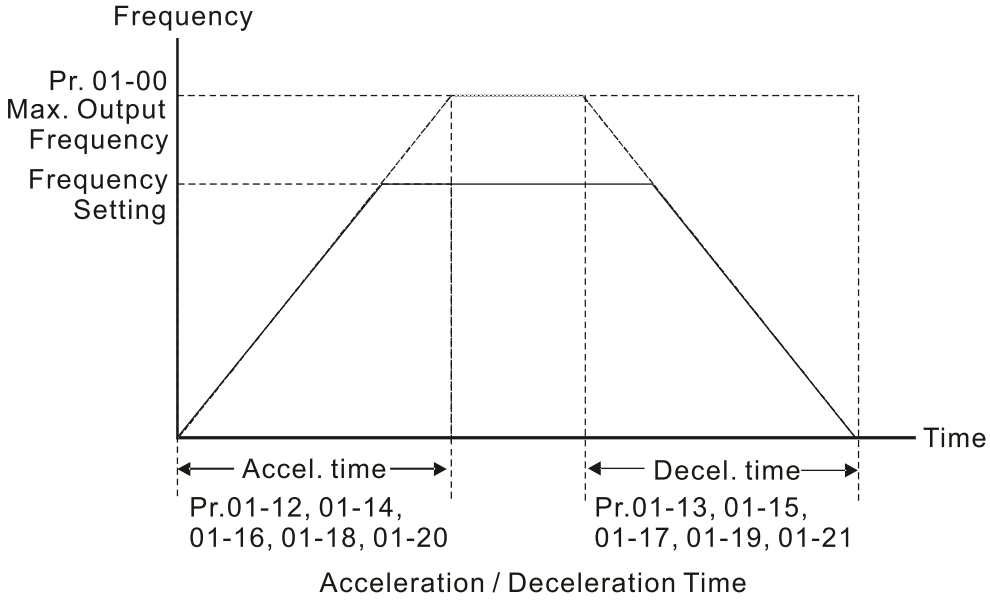

01-22 JOG Frequency

Default:6.00

Settings 0.00–599.00 Hz

- You can use the external terminal JOG to set the JOG function. When the JOG command is ON, the AC motor drive accelerates from 0 Hz to the JOG frequency (Pr.01-22). When the JOG command is OFF, the AC motor drive decelerates from the JOG frequency to stop. The JOG acceleration and deceleration time (Pr.01-20, Pr.01-21) are the time to accelerate from 0.0 Hz to the JOG frequency (Pr.01-22). You cannot execute the JOG command when the AC motor drive is running. When the JOG command is executing, other operation commands are invalid.

01-23 Switch Frequency between First and Fourth Accel./Decel.

Default:0.00

Settings 0.00–599.00 Hz

- This function does not require the external terminal switching function; it switches the acceleration and deceleration time automatically according to the Pr.01-23 setting. If you set the external terminal, the external terminal has priority over Pr.01-23.

When using this function, set the S-curve acceleration time to 0 if the fourth acceleration time is short.

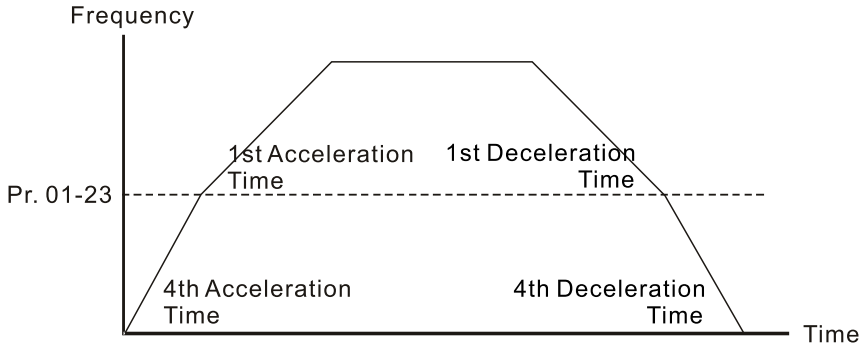

1st/4th Acceleration/Deceleration Frequency Switching

01-24	S-curve Acceleration Begin Time 1
01-25	S-curve Acceleration Arrival Time 2
01-26	S-curve Deceleration Begin Time 1
01-27	S-curve Deceleration Arrival Time 2

Default: 0.20 / 0.2

Settings Pr.01-45 = 0: 0.00–25.00 sec.
Pr.01-45 = 1: 0.0–250.0 sec.

Using an S-curve gives the smoothest transition between speed changes. The acceleration and deceleration curve adjusts the acceleration and deceleration S-curve. When enabled, the drive produces a different acceleration and deceleration curve according to the acceleration and deceleration time.

The S-curve function is invalid when you set the acceleration and deceleration time to 0.

When Pr.01-12, 01-14, 01-16, 01-18 ≥ Pr.01-24 and Pr.01-25,
the actual acceleration time = Pr.01-12, 01-14, 01-16, 01-18 + (Pr.01-24 + Pr.01-25) / 2.

When Pr.01-13, 01-15, 01-17, 01-19 ≥ Pr.01-26 and Pr.01-27,
the actual deceleration time = Pr.01-13, 01-15, 01-17, 01-19 + (Pr.01-26 + Pr.01-27) / 2.

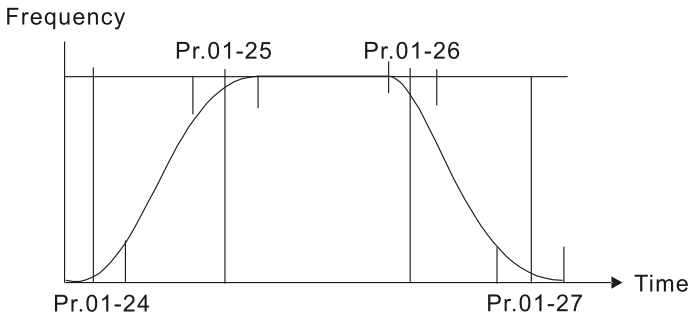

01-28	Skip Frequency 1 (Upper Limit)
01-29	Skip Frequency 1 (Lower Limit)
01-30	Skip Frequency 2 (Upper Limit)
01-31	Skip Frequency 2 (Lower Limit)
01-32	Skip Frequency 3 (Upper Limit)

01-33 Skip Frequency 3 (Lower Limit)

Default:0.00

Settings 0.00–599.00 Hz

- Sets the AC motor drive's skip frequency. The drive's frequency setting skips these frequency ranges. However, the frequency output is continuous.
  There are no limits for these six parameters, and you can combine them. Pr.01-28 does not need to be greater than Pr.01-29; Pr.01-30 does not need to be greater than Pr.01-31; Pr.01-32 does not need to be greater than Pr.01-33. You can set Pr.01-28–01-33 as you required. There is no size distinction among these six parameters.
- These parameters set the skip frequency ranges for the AC motor drive. You can use this function to avoid frequencies that cause mechanical resonance. The skip frequencies are useful when a motor has resonance vibration at a specific frequency bandwidth. Skipping this frequency avoids the vibration. There are three frequency skip zones available.
- You can set the Frequency command (F) within the range of skip frequencies. Then the output frequency (H) is limited to the lower limit of skip frequency ranges.
- During acceleration and deceleration, the output frequency still passes through the skip frequency ranges.

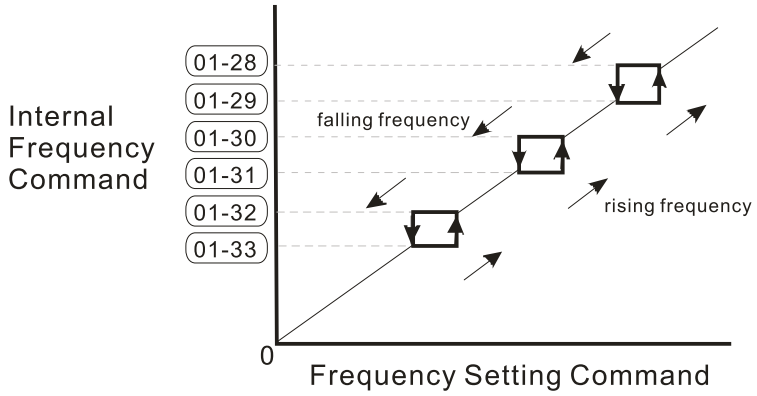

01-43 V/F Curve Selection

Default: 0

Settings 0: Determined by Pr.01-00–01-08
1: V/F curve to the power of 1.5
2: V/F curve to the power of 2

- When the setting is 0, refer to Pr.01-01–01-08 for the motor 1 V/F curve.
- When the setting is 1 or 2, the second and third voltage frequency settings are invalid.
- If the load of the motor is a variable torque load (torque is in direct proportion to the rotating speed, such as the load of a fan or a pump), the load torque is low at low rotating speed. You can decrease the input voltage appropriately to make the magnetic field of the input current smaller and reduce flux loss and iron loss for the motor to increase efficiency.
- When you set the V/F curve to high power, it has lower torque at low frequency, and the drive is not suitable for rapid acceleration and deceleration. Do NOT use this parameter for rapid acceleration and deceleration.

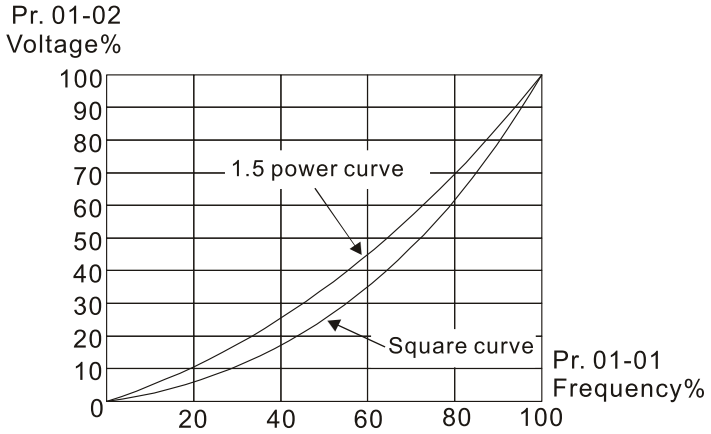

01-44 Auto-acceleration and Auto-deceleration Setting

Default: 0

Settings 0: Linear acceleration and deceleration
1: Auto-acceleration and linear deceleration
2: Linear acceleration and auto-deceleration
3: Auto-acceleration and auto-deceleration
4: Stall prevention by auto-acceleration and auto-deceleration (limited by Pr.01-12–01-21)

0: Linear acceleration and deceleration:
the drive accelerates and decelerates according to the setting for Pr.01-12–01-19.

1 or 2 (auto / linear acceleration and auto / linear deceleration):
the drive auto-tunes the acceleration and deceleration to effectively reduce the mechanical vibration during the load start-up and stop and make the auto-tuning process easier. It does not stall during acceleration and does not need a brake resistor during deceleration to stop. It can also improve operation efficiency and save energy.

3 (auto-acceleration and auto-deceleration–decelerating by the actual load):
the drive auto-detects the load torque and automatically accelerates from the fastest acceleration time and smoothest start-up current to the setting frequency. During deceleration, the drive automatically determines the loaded regenerative energy to steadily and smoothly stop the motor in the fastest deceleration time.

4: Auto-acceleration and auto-deceleration (set by acceleration/ deceleration time setting)
if the acceleration and deceleration time are within a reasonable range, the actual acceleration and deceleration time refer to the Pr.01-12–01-19 settings. If the acceleration and deceleration time are too short, the actual acceleration and deceleration time are greater than the acceleration and deceleration time settings.

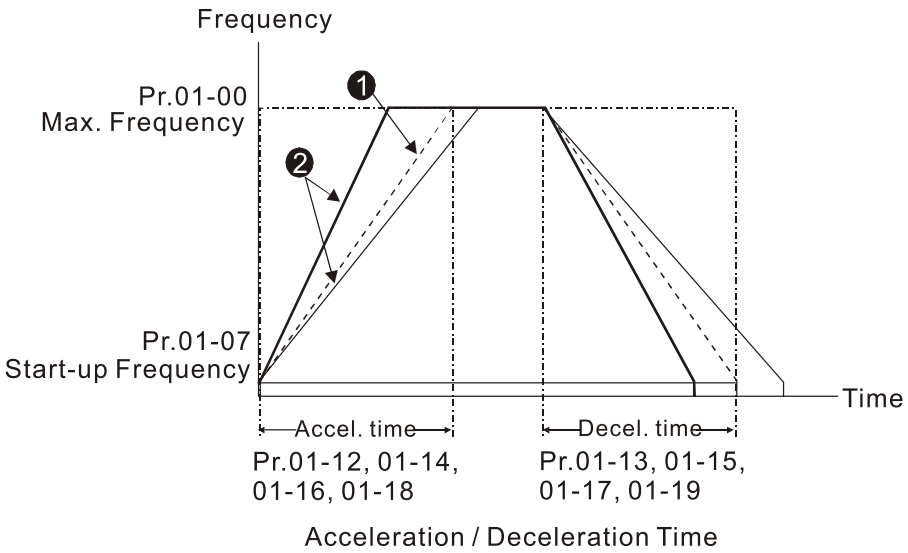

❶ Optimize the acceleration / deceleration time when Pr.01-44 is set to 0.
❷ Optimize the acceleration / deceleration time which load needs actually when Pr.01-44 is set to 3.

01-45 Time Unit for Acceleration and Deceleration and S-Curve

Default: 0

Settings 0: Unit 0.01 sec.
1: Unit 0.1 sec.

01-46 Hold Time of Lower Limit Frequency

Default: 0

Settings 0–600 sec.
0: Disabled, AC motor drive maintains at the lower limit frequency.
1–600: After maintaining the set number of seconds, the frequency of AC motor drive drops to 0 Hz.

[This page intentionally left blank]

02 Digital Input / Output Parameters

You can set this parameter during operation.

02-00 Two-wire / Three-wire Operation Control

Default:1

Settings
0: No function
1: Two-wire mode 1, power ON for operation control
(M1: FWD / STOP, M2: REV / STOP)
2: Two-wire mode 2, power ON for operation control
(M1: RUN / STOP, M2: REV / FWD)
3: Three-wire, power ON for operation control
(M1: RUN, M2: REV / FWD, M3: STOP)
4: Two-wire mode 1, Quick Start
(M1: FWD / STOP, M2: REV / STOP)
5: Two-wire mode 2, Quick Start
(M1: RUN / STOP, M2: REV / FWD)
6: Three-wire, Quick Start
(M1: RUN, M2: REV / FWD, M3: STOP)

- After enabling built-in PLC function, Pr.02-00 has no function. MI1 has no function when Pr.04-57 bit0 = 0; MI1 is fixed in the mode that open is stop and close is run when Pr.04-57 bit0 = 1. Users can set MI2, MI3 according to Pr.02-02 and Pr.02-03.
- In the Quick Start function, the output remains ready for operation. The drive responds to the Start command immediately.
- When using Quick Start function, the output terminals UVW are with driving voltages in order to output and respond immediately if a Start command is given. Do NOT touch the terminals or modify the motor wiring to prevent electric shocks.
- This parameter sets the configuration of the external drive operation control and the Quick Start function. There are six different control modes listed in the following table.

Pr.02-00	External Terminal Control Circuits
Setting value: 1 Two-wire operation control FWD / STOP REV / STOP	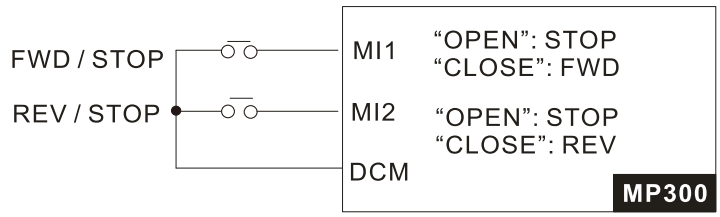
Setting value: 2 Two-wire operation control RUN / STOP REV / FWD	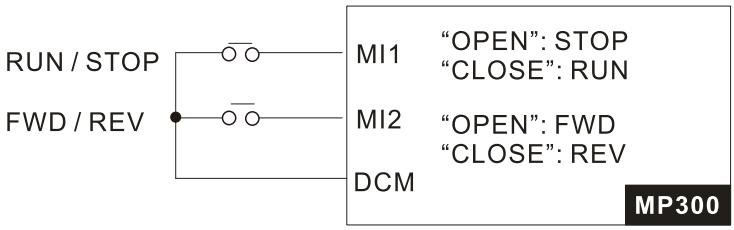

Pr.02-00	External Terminal Control Circuits
Setting value: 3 Three-wire operation control	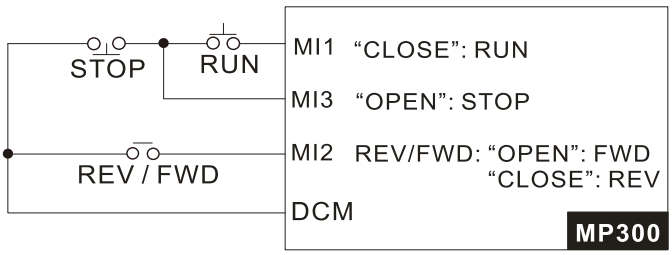
Setting value: 4 Two-wire operation control Quick Start	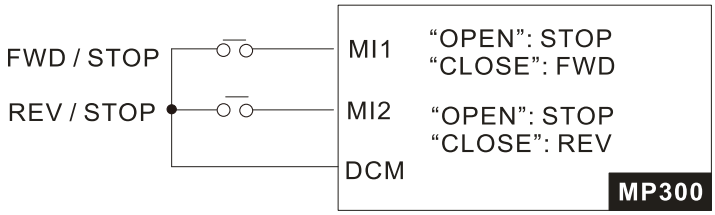
Setting value: 5 Two-wire operation control Quick Start	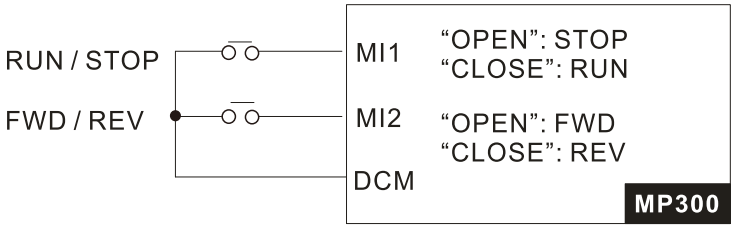
Setting value: 6 Three-wire operation control Quick Start	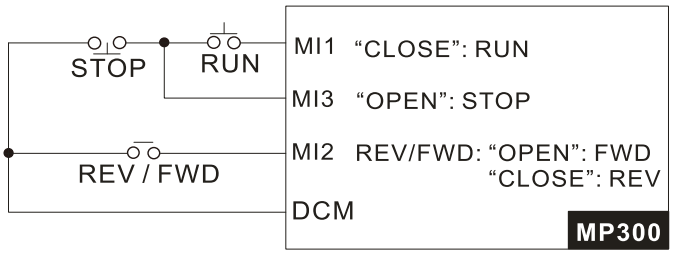

02-01 Multi-function Input Command 1 (MI1)

02-02 Multi-function Input Command 2 (MI2)

Default: 0

02-03 Multi-function Input Command 3 (MI3)

Default:1

02-04 Multi-function Input Command 4 (MI4)

Default:2

- Use this parameter to set the function of multi-function terminals.
- When Pr.02-00 = 0, you can set multi-function options with multi-function input terminals MI1, MI2.
- When Pr.02-00 ≠ 0, the multi-function input terminals MI1, MI2 work in accordance with the setting values for Pr.02-00.

  Example: If Pr.02-00 = 1: multi-function input terminal MI1 = FWD / STOP, MI2 = REV / STOP.

  If Pr.02-00 = 2: multi-function input terminal MI1 = RUN / STOP, MI2 = FWD / REV.
- If Pr.02-00 is set to three-wire operation control, terminal MI3 is for the STOP contact. The function set previously for this terminal is automatically invalid.
- When the built-in PLC function is enabled, MI is not regulated by Pr.02-00, and users can set MI2, MI3 according to Pr.02-02 and Pr.02-03. And when Pr.04-67 bit0 = 1, MI1 is fixed in the mode that open is stop and close is run.

Summary of function settings (Take the normally open contact (N.O.) for example, ON: contact is closed, OFF: contact is open)

ID*	Functions	Descriptions
0	No function	
1	Multi-step speed command 1 / multi-step position command 1	You can set 15 steps of speed or 15 positions with the digital status of these four terminals. You can use 16-steps of speed if you include the master speed when setting as 15 steps of speed. (refer to Parameter Group 04 Multi-step Speed Parameters).
2	Multi-step speed command 2 / multi-step position command 2	
3	Multi-step speed command 3 / multi-step position command 3	
4	Multi-step speed command 4 / multi-step position command 4	
5	Reset	Use this terminal to reset the drive after clearing a drive fault.
6	JOG command	This function is valid when the source of the operation command is the external terminal. The JOG operation executes when the drive stops completely. While running, you can still change the operation direction, and the STOP key on the keypad* and the STOP command from communications are valid. Note *: This function is valid when Pr.00-32 is set to 1. Once the external terminal receives the OFF command, the motor stops in the JOG deceleration time. Refer to Pr.01-20–01-22 for details. 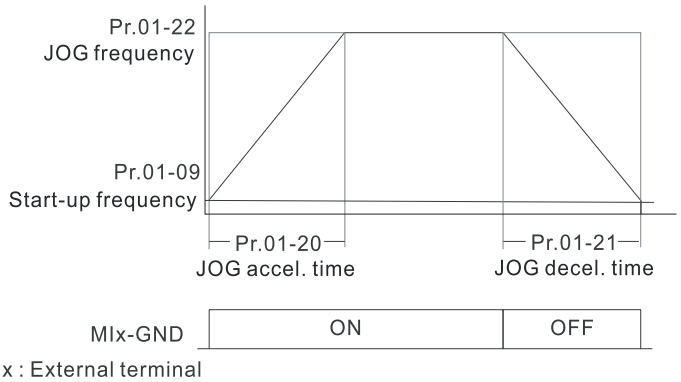
7	Acceleration / deceleration speed inhibit	When you enable this function, the drive stops acceleration or deceleration immediately. After you disable this function, the AC motor drive starts to accelerate or decelerate from the inhibit point. 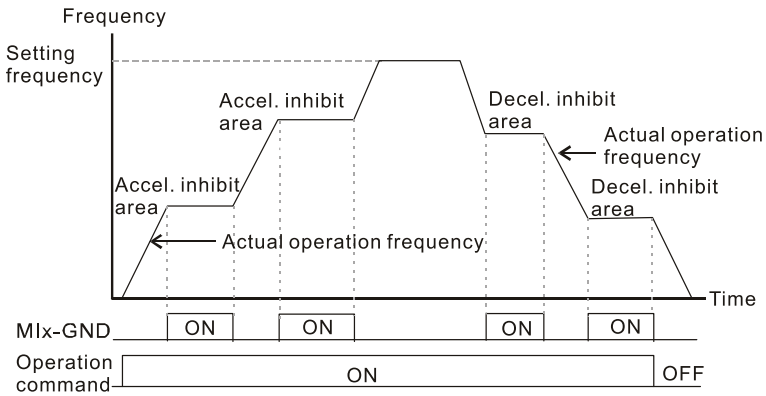

<table>
<tr><th>ID*</th><th>Functions</th><th>Descriptions</th></tr>
<tr><td>8</td><td>1st and 2nd acceleration / deceleration time selection</td><td rowspan="2">You can select the acceleration and deceleration time of the drive with this function, or from the digital status of the terminals; there are four acceleration and deceleration selections.
<table>
<tr><th></th><th>MIx = 8</th><th>MIx = 9</th></tr>
<tr><td>1st acceleration / deceleration time</td><td>0</td><td>0</td></tr>
<tr><td>2nd acceleration / deceleration time</td><td>1</td><td>0</td></tr>
<tr><td>3rd acceleration / deceleration time</td><td>0</td><td>1</td></tr>
<tr><td>4th acceleration / deceleration time</td><td>1</td><td>1</td></tr>
</table></td></tr>
<tr><td>9</td><td>3rd and 4th acceleration / deceleration time selection</td></tr>
<tr><td>10</td><td>EF inputs
(EF: External Fault)</td><td>For external fault input. The drive decelerates according to the Pr.07-20 setting, and the keypad shows “EF” (it shows the fault record when an external fault occurs). The drive keeps running until the fault is cleared (terminal status restored) after RESET.
 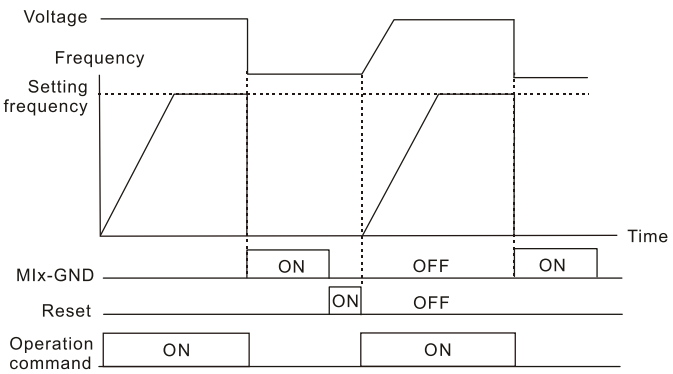
</td></tr>
<tr><td>11</td><td>B.B. inputs from external
(B.B.: Base Block)</td><td>ON: the output of the drive stops immediately. The motor is in free run and the keypad displays the B.B. signal. Refer to Pr.07-08 for details.</td></tr>
<tr><td>13</td><td>Cancel the setting of auto-acceleration / auto-deceleration time</td><td>Set Pr.01-44 to one of the 01–04 setting modes before using this function. When this function is enabled, OFF is for auto mode and ON is for linear acceleration / deceleration.</td></tr>
<tr><td>15</td><td>Rotating speed command from AI1</td><td>ON: force the source of the drive’s frequency to be AI1.
(If the rotating speed commands are set to AI1 and AI2 at the same time, the priority is AI1 > AI2.)</td></tr>
<tr><td>16</td><td>Rotating speed command from AI2</td><td>ON: force the source of the drive’s frequency to be AI2.
(If the rotating speed commands are set to AI1 and AI2 at the same time, the priority is AI1 > AI2.)</td></tr>
<tr><td>18</td><td>Force to stop</td><td>ON: the drive ramps to a stop according to the Pr.07-20 setting.</td></tr>
<tr><td>19</td><td>Digital up command
(Up Command)</td><td>ON: the frequency of the drive increases or decreases by one unit. If this function remains ON continuously, the frequency increases or decreases according to Pr.02-09 /</td></tr>
</table>

<table>
<tr><th>ID*</th><th>Functions</th><th>Descriptions</th></tr>
<tr><td>20</td><td>Digital down command
(Down Command)</td><td>Pr.02-10.
The Frequency command returns to zero when the drive stops and the displayed frequency is 0.00 Hz. If you select Pr.11-00, bit 7 = 1, the frequency is not saved.</td></tr>
<tr><td>22</td><td>Clear the counter</td><td>ON: the current counter value is cleared and displays 0. The drive counts up when this function is disabled.</td></tr>
<tr><td>23</td><td>Input the counter value (MI4)</td><td>ON: the counter value increases by one. Use the function with Pr.02-19.</td></tr>
<tr><td>24</td><td>FWD JOG command</td><td>This function is valid when the source of the operation command is the external terminal.
ON: the drive executes forward JOG. When executing the JOG command in torque mode, the drive automatically switches to speed mode. The drive returns to torque mode after the JOG command is complete.</td></tr>
<tr><td>25</td><td>REV JOG command</td><td>This function is valid when the source of the operation command is the external terminal.
ON: the drive executes reverse JOG. When executing the JOG command in torque mode, the drive automatically switches to speed mode. The drive returns to torque mode after the JOG command is complete.</td></tr>
<tr><td>38</td><td>Disable writing EEPROM function
(parameter memory is disabled)</td><td>ON: writing to EEPROM is disabled. (Changed parameters are not saved after powering off.)</td></tr>
<tr><td>41</td><td>HAND switch</td><td rowspan="2">☑ When the MI terminal switches to OFF, it executes a STOP command. Therefore, if the MI terminal switches to OFF during operation, the drive stops.
☑ Use the optional keypad KPC-CC01 to switch between HAND and AUTO. The drive stops first, and then switches to HAND or AUTO status.
☑ The optional digital keypad KPC-CC01 displays the current status of the drive (HAND / OFF / AUTO).
<table>
<tr><th></th><th>bit 1</th><th>bit 0</th></tr>
<tr><td>OFF</td><td>0</td><td>0</td></tr>
<tr><td>AUTO</td><td>0</td><td>1</td></tr>
<tr><td>HAND</td><td>1</td><td>0</td></tr>
<tr><td>OFF</td><td>1</td><td>1</td></tr>
</table></td></tr>
<tr><td>42</td><td>AUTO switch</td></tr>
<tr><td>51</td><td>Selection for PLC mode (bit 0)</td><td rowspan="2">
<table>
<tr><th>PLC status</th><th>bit 1</th><th>bit 0</th></tr>
<tr><td>Disable PLC function (PLC 0)</td><td>0</td><td>0</td></tr>
<tr><td>Trigger PLC to operate (PLC 1)</td><td>0</td><td>1</td></tr>
<tr><td>Trigger PLC to stop (PLC 2)</td><td>1</td><td>0</td></tr>
<tr><td>No function</td><td>1</td><td>1</td></tr>
</table></td></tr>
<tr><td>52</td><td>Selection for PLC mode (bit 1)</td></tr>
</table>

<table>
<tr><th>ID*</th><th>Functions</th><th>Descriptions</th></tr>
<tr><td>56</td><td>Local / Remote selection</td><td>Use Pr.00-29 to select for LOCAL / REMOTE mode (refer to Pr.00-29).
When Pr.00-29 is not set to 0, the digital keypad KPC-CC01 displays the LOC / REM status.
<table>
<tr><td></td><td>bit 0</td></tr>
<tr><td>REM</td><td>0</td></tr>
<tr><td>LOC</td><td>1</td></tr>
</table></td></tr>
<tr><td>58</td><td>Enable fire mode
(with RUN command)</td><td>When fire occurs, enable this terminal to make the drive enter the fire mode to force the drive to run. If the drive is in stop status, enable this terminal to make the drive enter the fire mode to force the drive to run according to Pr.06-80 settings. (Refer to Pr.06-80, 06-81, 06-88 for details)</td></tr>
<tr><td>59</td><td>Enable fire mode
(without RUN command)</td><td>When fire occurs, enable this terminal to make the drive enter the fire mode.
If the drive is in stop status, enable this terminal to make the drive enter the fire mode, but the drive does not run.
If the drive is in running status, enable this terminal to run the drive according to Pr.06-80 settings. (Refer to Pr.06-80, 06-81, 06-88 for details)</td></tr>
<tr><td>69</td><td>Enable preheating function</td><td>When you set MI = 69, MI determines the preheating function whether is enabled or disabled.</td></tr>
<tr><td>97</td><td>Multi-pump manual / auto switch</td><td>When you set MI = 97, you can use manual mode to select whether it’s controlled by multi-pump system.
● Manual operation mode:
(a) Operation command (RUN / STOP) and operation frequency are controlled locally by each individual unit.
(b) After the manual mode is released, control is returned to the primary pump.
● Auto operation mode:
(a) Only master pumps can perform operation and frequency command controls.</td></tr>
<tr><td>100</td><td>Enable clean function</td><td>When you set MI = 100, you can enable clean function. Refer to Pr.12-53–12-64 for the clean function setting.</td></tr>
</table>

02-09 UP / DOWN key mode

Default: 0

Settings 0: UP / DOWN by the acceleration / deceleration time
1: UP / DOWN constant speed (Pr.02-10)
2: Pulse signal (Pr.02-10)
3: External terminals UP / DOWN key mode

02-10 Constant Speed, Acceleration / Deceleration Speed of the UP / DOWN Key

Default:0.001

Settings 0.001–1.000 Hz / ms

Use when the multi-function input terminals are set to 19, 20 (Digital UP / DOWN command). The

frequency increases or decreases according to Pr.02-09 and Pr.02-10.

- When Pr.11-00 bit 7 = 1, the frequency is not saved. The Frequency command returns to zero when the drive stops, and the displayed frequency is 0.00 Hz. At this time, increasing or decreasing the Frequency command (F) by using the UP or DOWN key is valid only when the drive is running.
- When Pr.02-09 is set to 0: The increasing or decreasing Frequency command (F) operates according to the setting for acceleration or deceleration time (refer to Pr.01-12–01–19).

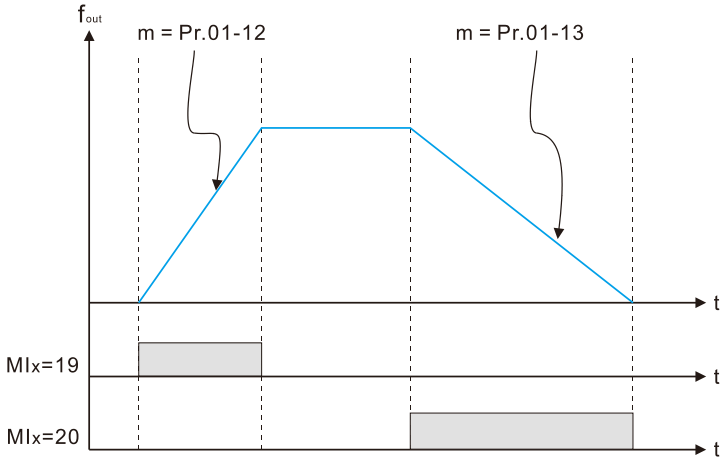

- When Pr.02-09 is set to 1: The increasing or decreasing Frequency command (F) operates according to the setting of Pr.02-10 (0.01–1.000 Hz/ms).

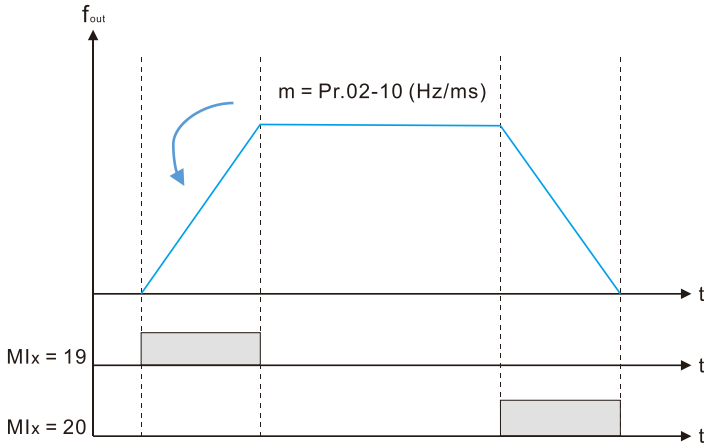

- When Pr.02-09 is set to 2: The increasing or decreasing Frequency command (F) operates according to the setting of Pr.02-10.

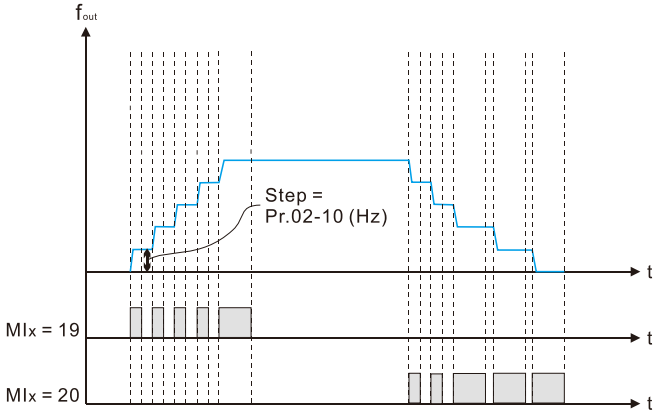

- When Pr.02-09 is set to 3: The increasing or decreasing Frequency command (F) operates according to the exponential curve.

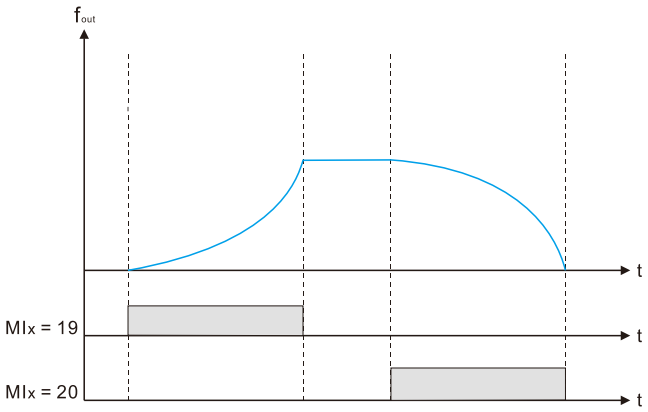

02-11 Multi-function Input Response Time

Default: 0.005

Settings 0.000–30.000 sec.

- Use this parameter to set the response time of the digital input terminals MI1–MI7.
- To prevent interference from causing malfunction in the input of the digital terminals, executes operation after delaying the time set in this parameter when the terminal is triggered.

02-12 Multi-function Input Mode Selection

Default:0000

Settings 0000h–FFFFh

- The parameter setting is in hexadecimal.
- 0: normally open (N.O.); 1: normally closed (N.C.)
- This parameter sets the status of the multi-function input signal (0: normally open; 1: normally closed) and it is not affected by the status of SINK / SOURCE.
- bit 0–bit 3 correspond to MI1–MI4.
- The default for bit 0 (MI1) is FWD terminal, and the default for bit 1 (MI2) is REV terminal. You cannot use this parameter to change the input mode when Pr.02-00 ≠ 0.
- You can change the terminal ON / OFF status through communications.

  For example: MI3 is set to 1 (multi-step speed command 1) and MI4 is set to 2 (multi-step speed command 2).

  Then the forward + second step speed command = $1001_2 = 9_{10}$.

  As long as Pr.02-12 = 9 is set through communications, there is no need to wire any multi- function terminal to run forward with the second step speed.

bit 3	bit 2	bit 1	bit 0
MI4	MI3	MI2	MI1

- Use Pr.11-42 bit 1 to select whether FWD / REV terminal is controlled by Pr.02-12 bit 0 and bit 1.

02-13 Multi-function Output 1 (RY1)

Default:11

02-14 Multi-function Output 2 (RY2)

Default: 0

02-16 Multi-function Output 3 (MO)

Default: 0

Use this parameter to set the function of multi-function terminals.

Summary of Function Settings (Take the normally open contact (N.O.) for example, closed: contacts are conducted)

ID*	Functions	Descriptions
0	No function	Output terminal with no function
1	Indication during RUN	Activate when the drive is not in STOP.
2	Operation speed reached	Activate when output frequency of drive reaches to the setting frequency.
3	Desired frequency reached 1 (Pr.02-22)	Activate when the desired frequency (Pr.02-22) is reached.
4	Desired frequency reached 2 (Pr.02-24)	Activate when the desired frequency (Pr.02-24) is reached.
7	Over torque 1	Activate when the drive detects over-torque. Pr.06-07 sets the over-torque detection level, and Pr.06-08 sets the over-torque detection time. (Refer to Pr.06-06–06-08)
9	Drive is ready	Activate when the drive is ON with no error detected.
10	Low voltage warning (Lv)	Activate when an extremely low voltage at DC side is detected. Activate when the DC bus voltage is too low. (refer to Pr.06-00 Low Voltage Level)
11	Malfunction indication	Activate when fault occurs (except Lv stop).
13	Overheat warning	Activate when IGBT or heat sink overheats to prevent the drive from shutting down due to overheating. (Refer to Pr.06-15)
15	Abnormal PID feedback	Activate when the PID feedback signal error is detected.
17	Count value reached (Pr.02-20)	When the drive executes external counter, this contact activates if the count value is equal to the setting value for Pr.02-20. This contact deactivates when the setting value of Pr.02-20 > the setting value of Pr.02-19.
18	Count value reached (Pr.02-19)	When the drive executes the external counter, this contact activates if the count value is equal to the setting value for Pr.02-19.
19	External interrupt B.B. Input (Base Block)	Activate when external interrupt (B.B.) occurs in the drive and stops outputting .
20	Warning output	Activate when a warning is detected.
21	Over-voltage	Activate when over-voltage is detected.
22	Over-current stall prevention	Activate when the over-current stall prevention is detected.
23	Over-voltage stall prevention	Activate when over-voltage stall prevention is detected.
24	Operation source	Activate when the source of operation command is not controlled by the digital keypad (Pr.00-21 ≠ 0).
25	Forward command	Activate when the operation direction is forward.
26	Reverse command	Activate when the operation direction is reverse.

<table>
<tr><th>ID*</th><th>Functions</th><th>Descriptions</th></tr>
<tr><td>29</td><td>Output when frequency ≥ Pr.02-34</td><td>Activate when frequency is ≥ Pr.02-34 (actual output H ≥ Pr.02-34).</td></tr>
<tr><td>30</td><td>Output when frequency < Pr.02-34</td><td>Activate when frequency is < Pr.02-34 (actual output H < Pr.02-34).</td></tr>
<tr><td>35</td><td>Error output selection 1 (Pr.06-23)</td><td>Activate when Pr.06-23 is ON.</td></tr>
<tr><td>36</td><td>Error output selection 2 (Pr.06-23)</td><td>Activate when Pr.06-24 is ON.</td></tr>
<tr><td>37</td><td>Error output selection 3 (Pr.06-23)</td><td>Activate when Pr.06-25 is ON.</td></tr>
<tr><td>38</td><td>Error output selection 4 (Pr.06-23)</td><td>Activate when Pr.06-26 is ON.</td></tr>
<tr><td>40</td><td>Speed reached (including Stop)</td><td>Activate when the drive’s output frequency reaches the setting frequency or stopped.</td></tr>
<tr><td>44</td><td>Low current output</td><td>Use this function with Pr.06-71–Pr.06-73.</td></tr>
<tr><td>51</td><td>51: Analog output control for RS-485 interface</td><td>For RS-485 communication control output.</td></tr>
<tr><td>52</td><td>Output control for communication cards</td><td>Control the output through the communication cards (CMMP-BT01, CMM-PD02, CMM-DN02, CMM-EIP02)
<table>
<tr><th>Physical terminal</th><th>Related Parameters</th><th>Attribute</th><th>Address</th></tr>
<tr><td>RY1</td><td>Pr.02-13 = 52</td><td>RW</td><td>The bit0 of 2640H</td></tr>
<tr><td>RY2</td><td>Pr.02-14 = 52</td><td>RW</td><td>The bit1 of 2640H</td></tr>
<tr><td>MO</td><td>Pr.02-16 = 52</td><td>RW</td><td>The bit3 of 2640H</td></tr>
</table></td></tr>
<tr><td>53</td><td>Fire mode indication</td><td>Activate when MI setting 58 or 59 is enabled.</td></tr>
<tr><td>67</td><td>Analog input level reached</td><td>The multi-function output terminals operate when the analog input level is between the high level and the low level.
Pr.03-44: Select one of the analog input channels (AI1, AI2) to be compared.
Pr.03-45: The high level for the analog input, default is 50%.
Pr.03-46: The low level for the analog input, default is 10%.
If analog input > Pr.03-45, the multi-function output terminal operates.
If analog input < Pr.03-46, the multi-function output terminal stops outputting.</td></tr>
<tr><td>69</td><td>Indication of preheating operation</td><td>Activate when enabling the function.</td></tr>
<tr><td>75</td><td>Forward RUN status</td><td>When the drive runs FWD, the output terminal for forward running is closed; when the drive stops, the output terminal for forward running is open.</td></tr>
<tr><td>76</td><td>Reverse RUN status</td><td>When the drive runs REV, the output terminal for reverse running is closed; when the drive stops, the output terminal for reverse running is open.</td></tr>
</table>

02-18 Multi-function Output Direction

Default:0000

Settings 0000h–FFFFh–

- The parameter setting is in hexadecimal.
- (0: N.O.; 1: N.C.)
- This parameter is set by a bit. If the bit is 1, the corresponding multi-function output acts in an opposite way. Example: Assume Pr.02-13 = 1 (indication when the drive is operating). If the output is positive, and the bit is set to 0, then Relay is ON when the drive runs and is OFF when the drive stops. On the contrary, if the output is negative, and the bit is set to 1, then the Relay is OFF when the drive runs and is ON when the drive stops.

bit3	bit2	bit1	bit0
MO	Reserved	Reserved	RY

02-19 Terminal Counting Value Reached (returns to 0)

Default: 0

Settings 0–65500

- The counting function is enabled when Pr.02-19≠0.
- You can set the input point for the counter using the multi-function terminal MI4 as a trigger terminal (set Pr.02-04 to 23). When counting is completed, the specified multi-function output terminal is activated (Pr.02-13 or Pr.02-16 is set to 18).

The timing diagram below shows that when counting to 5, RY1 activates and displays 0.

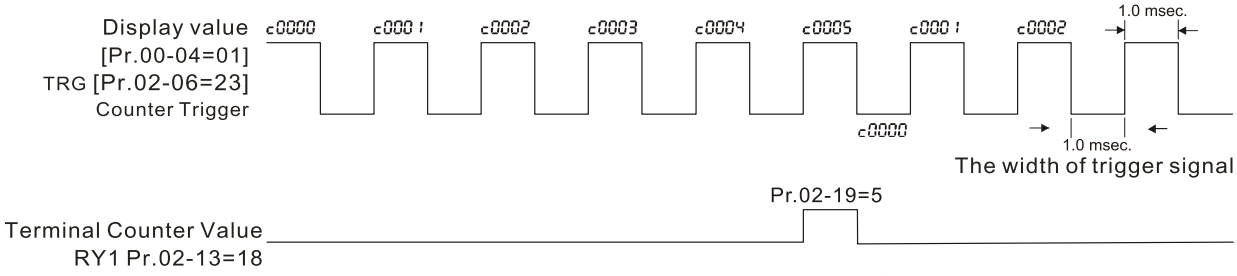

The timing diagram of
the external counting terminals and the counting value reached

02-20 Preliminary Counting Value Reached (does not return to 0)

Default: 0

Settings 0–65500

- Use this parameter with Pr.02-19.
- When the count value counts from 1 to reach this value, the corresponding multi-function output terminal is activated (Pr.02-13 and Pr.02-16 are set to 17) and keeps counting to the last count value.
- You can use this parameter as the end of counting to make the drive run from the low speed to stop.

  The timing diagram is RY1 activates when the count value is three, and the display returns to zero when counts to five:

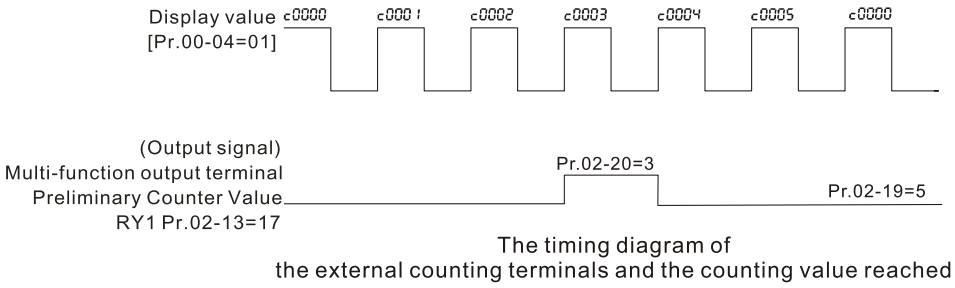

The timing diagram of
the external counting terminals and the counting value reached

02-22 Desired Frequency Reached 1

Default:150.00

Settings 0.00–599.00 Hz

02-24 Desired Frequency Reached 2

Default:150.00

Settings 0.00–599.00 Hz

02-23 The Width of the Desired Frequency Reached 1

Default:2.00

Settings 0.00–599.00 Hz

02-25 The Width of the Desired Frequency Reached 2

Default:2.00

Settings 0.00–599.00 Hz

Once the output speed (frequency) reaches the desired speed (frequency), if the corresponding multi-function output terminal is set to 3 or 4 (Pr.02-13, Pr.02-14, and Pr.02-16), this multi-function output terminal is “closed”.

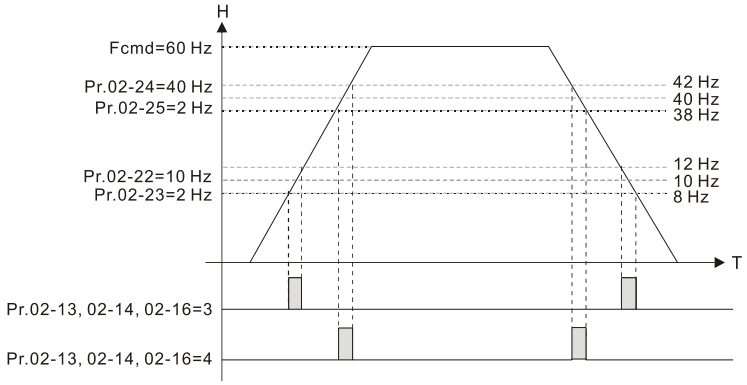

02-34 Output Frequency Setting for Multi-function Output Terminal

Default:0.00

Settings 0.00–599.00 Hz

02-35 External Operation Control Selection after Reset and Reboot

Default: 0

Settings 0: Disabled

1: Drive runs if the RUN command remains after reset or reboot.

2: After re-powering ON, execute the drive according to the operating status before it was OFF.

Setting value 1:

- Situation 1-1: After powering ON the drive, if the external terminal for RUN stays ON and Pr.00-21 = 1 which operation source is from external terminals, then the drive runs. This is the setting of the operation with power ON.
- Situation 1-2: As mentioned above, if the built-in PLC function is enabled, then you have to set Pr.04-57 bit0 = 1.
- Situation 2: After clearing a fault once a fault is detected and the external terminal for RUN stays ON, you can run the drive by pressing the RESET key.

Setting value 2:

- This parameter is when the drive is powered ON, the drive executes running if the RUN command (Pr.07-35) remains in the running state and after the delay time set by Pr.07-36. That is the setting of power-on operation requirements.

02-50 Display the Status of Multi-function Input Terminal

Default: Read only

Settings Monitor the status of the Multi-function Input Terminal

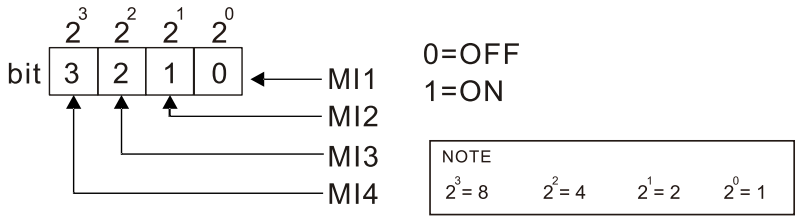

- Example:

  When Pr.02-50 is 0004h (hex), that is, the value is 4 (decimal), and displays 0100 (binary). It means that MI3 is ON.

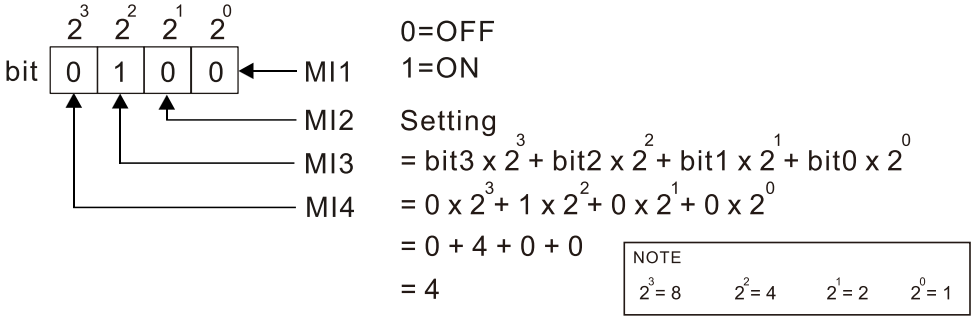

02-51 Display the Status of Multi-function Output Terminal

Default: Read only

Settings Monitor the status of the Multi-function Output Terminal

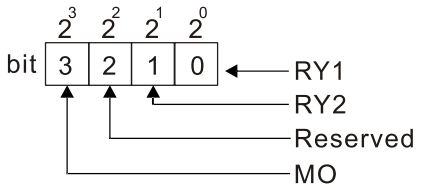

0=OFF
1=ON

NOTE
$2^3 = 8$ $2^2 = 4$
$2^1 = 2$ $2^0 = 1$

Example:

When Pr.02-51 is 0009h (hex), that is, the value is 9 (decimal), and displays 1001 (binary). It means that RY1 and MO are ON.

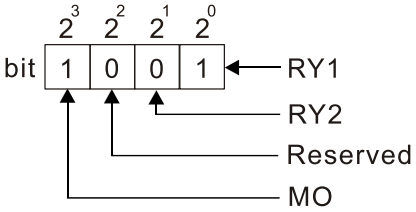

0=OFF
1=ON

Setting
$= \text{bit } 3 \times 2^3 + \text{bit } 0 \times 2^0$
$= 1 \times 2^3 + 1 \times 2^0$
$= 8 + 1$
$= 9$

NOTE
$2^3 = 8$ $2^2 = 4$
$2^1 = 2$ $2^0 = 1$

02-52 Display the External Multi-function Input Terminals Used by PLC

Default: 0

Settings 0–65535

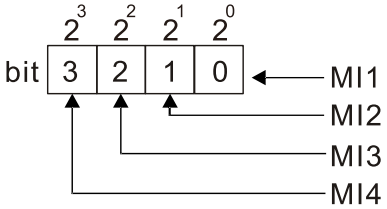

0=OFF
1=ON

NOTE
$2^3 = 8$ $2^2 = 4$ $2^1 = 2$ $2^0 = 1$

Example:

When Pr.02-52 Is 0009h (hex), that is, the value is 9 (decimal), and displays 1001 (binary). It means that MI1 and MI4 are used by PLC.

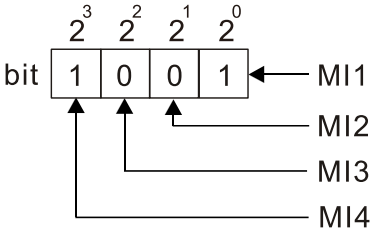

0=OFF
1=ON

Setting
$= \text{bit3} \times 2^3 + \text{bit0} \times 2^0$
$= 1 \times 2^3 + 1 \times 2^0$
$= 8 + 1$
$= 9$

NOTE
$2^3 = 8$ $2^2 = 4$ $2^1 = 2$ $2^0 = 1$

02-53 Display the External Multi-function Output Terminals Used by PLC

Default: 0

Settings 0–65535

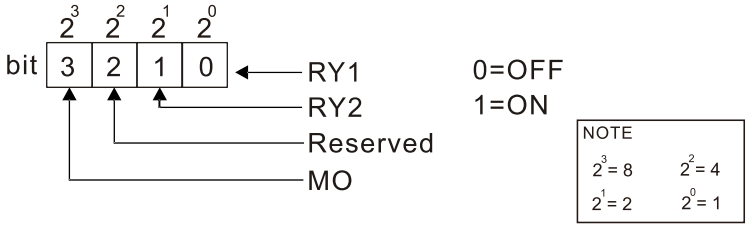

Example:

When Pr.02-53 is 0009h (hex), that is, the value is 9 (decimal), and displays 1001 (binary). It means that RY1 and MO are used by PLC.

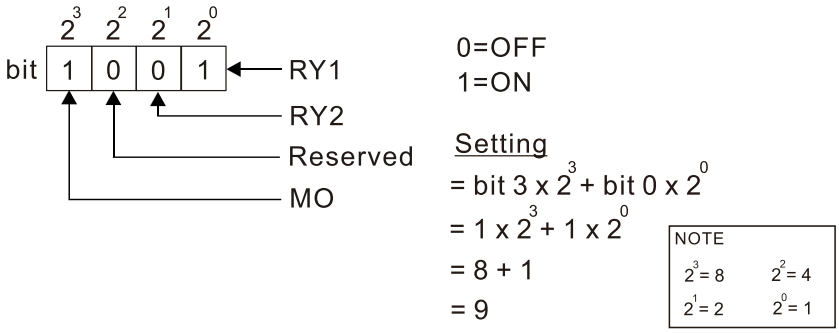

02-54 Display the Frequency Command Executed by External Terminal

Default: Read only

Settings Read only

When you set the source of the Frequency command as the external terminal, if Lv or Fault occurs, the external terminal Frequency command is saved in this parameter.

02-72 Preheating DC current level

Default: 0

Settings 0–100%

This parameter controls the level of the preheating DC current input to the motor. The percentage of the preheating DC current equals to the percentage of motor rated current (Pr.00-01). Therefore, when you set this parameter, increase the level slowly to reach the desired preheating temperature.

Pr.02-72 is defined as direct current, so the actual output current is Pr.02-72 x $\sqrt{2}$.

Related parameters: Pr.02-73 Preheating DC Current Duty Cycle, Pr.02-13 and Pr.02-16 Multi-function Output Relay 69: Indication of Preheating Function, Pr.02-01–02-05 Multi-function Input Terminal 69: Auto-activate preheating function.

02-73 Preheating DC Current Duty Cycle

Default: 0

Settings 0–100%

This parameter is to set up the duty cycle of the preheating DC current input to the motor. 0–100% corresponds to 0–10 sec. If the setting is 0%, there is no output current from the motor drive; if the

setting is 100%, there is continuous output DC current. For example, when the setting of this parameter is 50%, the cycle time is the time spent to input current to motor for 5 seconds and stop inputting for 5 seconds. When MI #69 is enabled, this parameter operates periodically with MI#69 until the motor drive starts to run the motor or until MI#69 is disabled.

- Preheating function works only when the setting value for Pr.02-72 and Pr.02-73 are not 0.
- If user doesn't set MI=69 (enable preheating function), this function activates when the first operation stops, or immediately activates after rebooting.
- When MI=69 (enable preheating function) is enabled, MI=69 controls the start and stop of preheating function.
- The figure below shows the timing relationship when MI=69 enable preheating function is disabled and when preheating DC current is enabled and cycle time is 50%. When the motor drive is stopped, the preheating function starts to output DC current continuously.

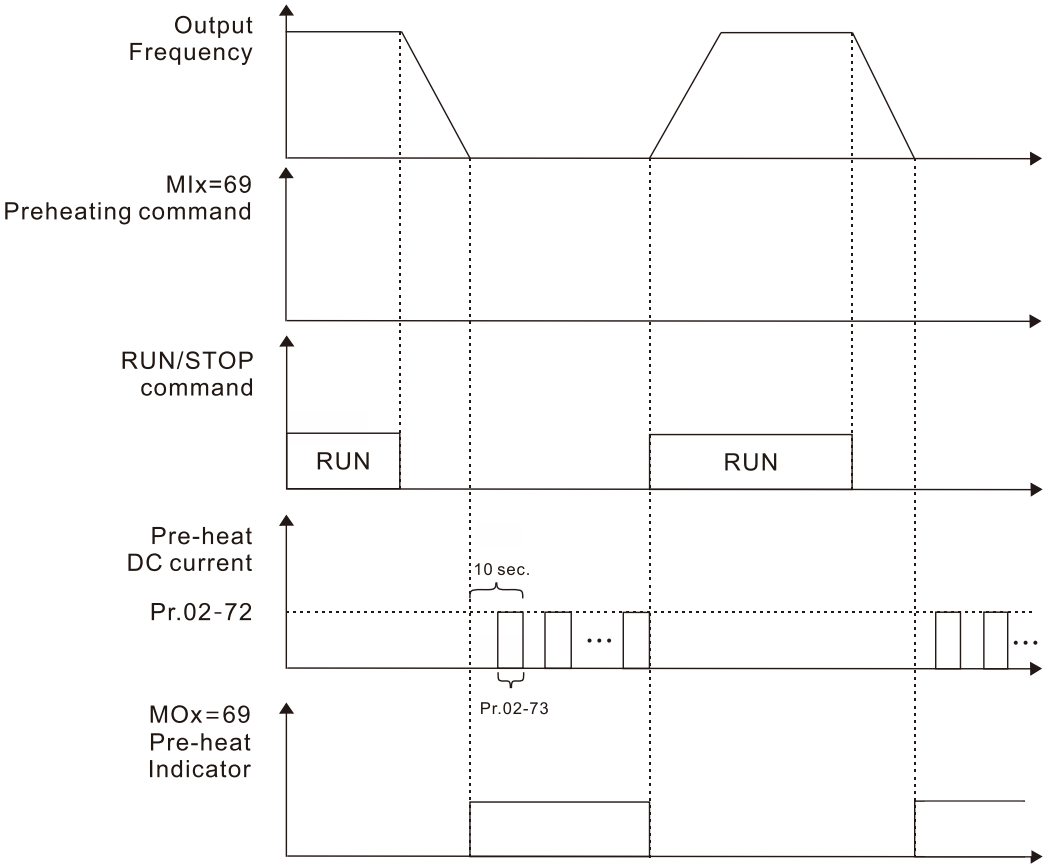

The figure below shows the timing relationship when MI=69 enable preheating function is enabled and when preheating DC current is enabled and cycle time is 50%.

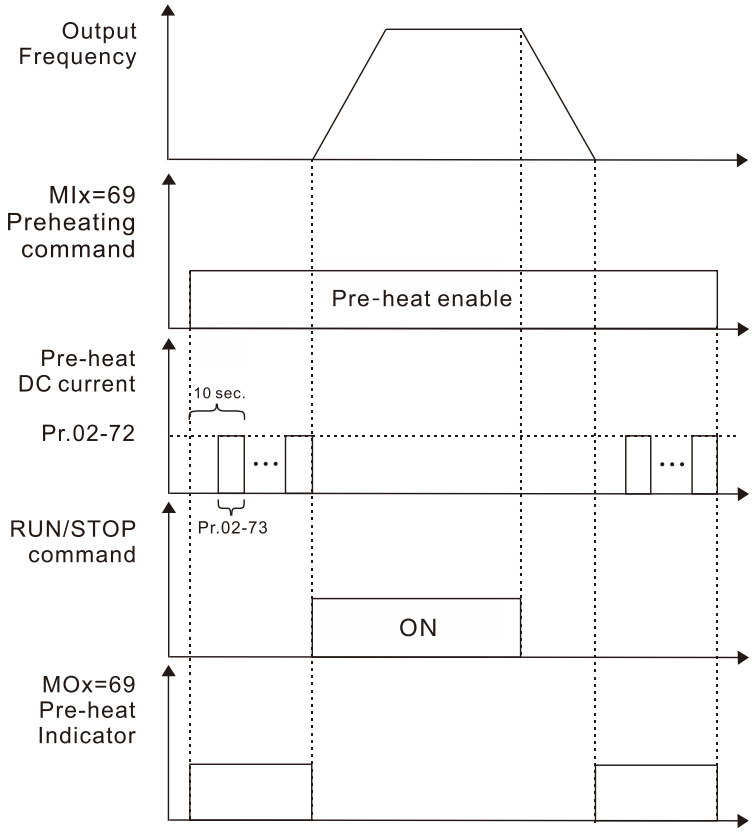

The figure below shows the timing relationship between preheating function and enabling DC brake.

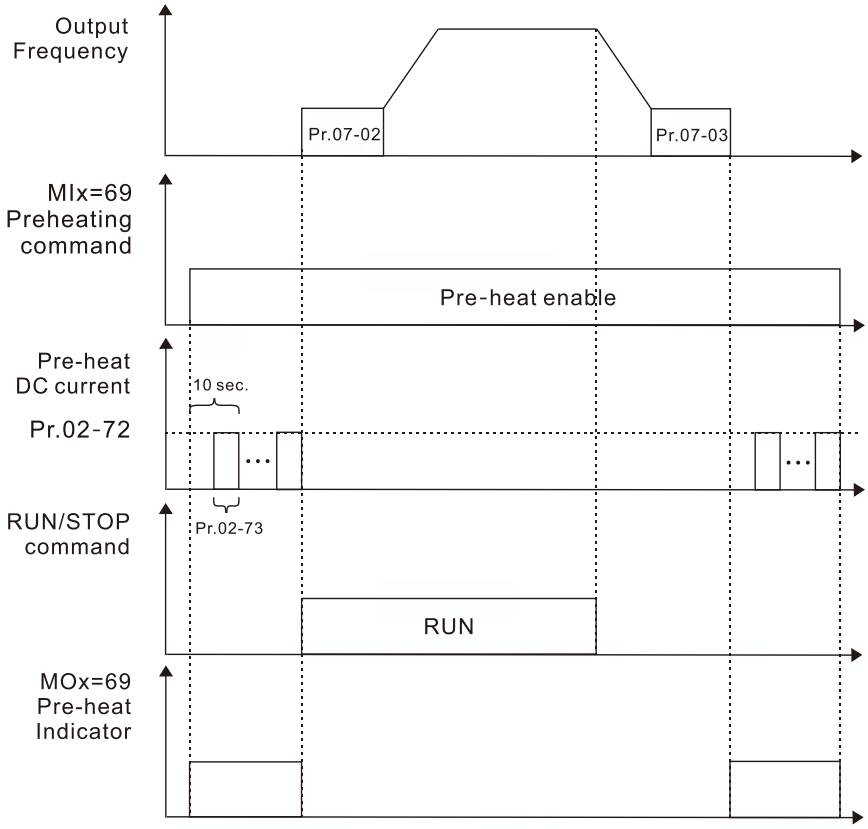

[This page intentionally left blank]

03 Analog Input / Output Parameters

You can set this parameter during operation.

03-00 AI1 Analog Input Selection

Default:5

03-01 AI2 Analog Input Selection

Default: 0

Settings

0: No function

1: Frequency command

5: PID feedback signal

6: Thermistor input value (PTC-130 / KTY-84-130)

21: Pressure inputs (outlet side)

22: Pressure inputs (inlet side)

23: Flow inputs

- When you use analog input as the PID reference target input, you must set Pr.00-20 to 2 (external analog input).
  Pr.03-00 = 1: To be frequency command when PID uses frequency as target value.
  Pr.03-00 = 5: To be PID feedback signal when PID uses the pressure feedback signal as reference value, and Pr.08-00 = 1 (negative PID feedback) at the same time.
- When using the frequency command, the corresponding value for 0–10 V / 4–20 mA is 0–maximum operation frequency (Pr.01-00).
- Pr.00-25 should set as the unit of pressure when Pr.03-00 = 21 (outlet pressure), and Pr.00-38 should set as the unit of pressure when Pr.03-01 = 22 (inlet pressure), otherwise flow estimation module cannot work correctly.
- Pr.00-25 should set as the unit of flow when Pr.03-00 = 23 (flow inputs), otherwise cavitation detection module cannot work correctly.
- When using water pump related functions, connect AI1 to outlet pressure, connect AI2 to inlet pressure. The settings are as follows:

Selections of control	Pr.03-00: AI1 (outlet pressure)	Pr.03-01: AI2 (inlet pressure)
Pressure feedback control	5: PID feedback signal	
Q-H method (Pr.12-20 = 1)	21: Pressure inputs (outlet side)	22: Pressure inputs (inlet side)
Q-H method (Pr.12-20 = 1) + Pressure feedback control	5: PID feedback signal	22: Pressure inputs (inlet side)
Cavitation detection (Pr.12-18 = 2)	23: Flow inputs	22: Pressure inputs (inlet side)
Cavitation detection (Pr.12-18 = 1) + Q-H method (Pr.12-20 = 1) + Pressure feedback control	5: PID feedback signal (If use with pressure feedback control at the same time, the flow meter cannot be used directly, but can estimate by Q-H method.	22: Pressure inputs (inlet side)

03-03 AI1 Analog Input Bias

Default: 0

Settings -100.0–100.0%

- Sets the corresponding AI1 voltage for the external analog input 0.
- Refer to Pr.03-11 for details.

03-04 AI2 Analog Input Bias

Default: 0

Settings -100.0–100.0%

- Sets the corresponding AI2 voltage for the external analog input 0.
- Refer to Pr.03-12 for details.

03-07 AI1 Positive / Negative Bias Mode
03-08 AI2 Positive / Negative Bias Mode

Default: 0

Settings 0: No bias
4: Bias serves as the center

- Using negative bias to set the frequency greatly reduces the noise interference. In a noisy environment, do NOT use signals less than 1V to set the drive's operation frequency.

03-11 AI1 Analog Input Gain
03-12 AI2 Analog Input Gain

Default:100.0

Settings -500.0–500.0%

- Pr.03-03–03-12 are used when the Frequency command source is the analog voltage or current signal.
- Use this function when user's pressure sensor have to detect negative value
  For example: if AI1 needs to use a pressure sensor 0–10 V of voltage type, and the detection range is -1.0–9.0 bar that the total is10 bar, then follow the steps below:
  1. Setting: 0.0–10.0 bar, Pr.00-25 = 353, Pr.00-26 = 10.0
  2. Set the bias: 10%, to make the corresponding point of 0.0 bar change from 0V to 1V, the detection range of pressure sensor changes to -1.0–9.0 bar, and Pr.03-03 = 10%
  3. Set the bias mode: Bias serves as the center, Pr.03-07 = 4
  4. If you want the pressure sensor to respond more quickly, then set the gain to be 200%, Pr.03-11 = 200%

Refer to the graphic expression below:

1. Step1: Pr.00-25 = 353, Pr.00-26 = 10.0

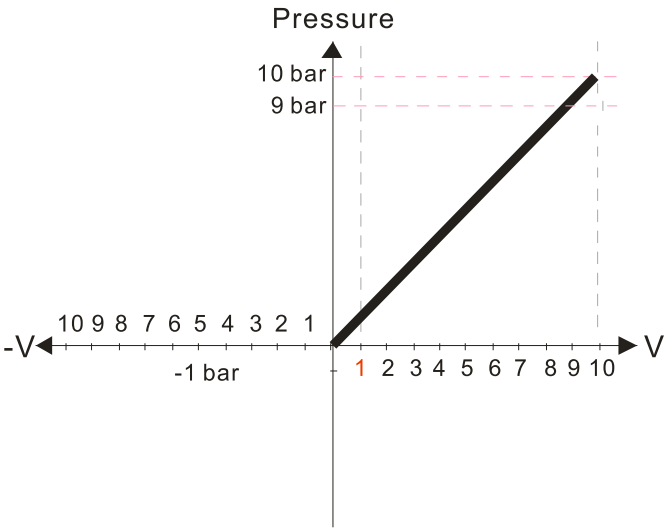

2. Step2: Pr.03-03 = 10%

   Step3: Pr.03-07 = 4

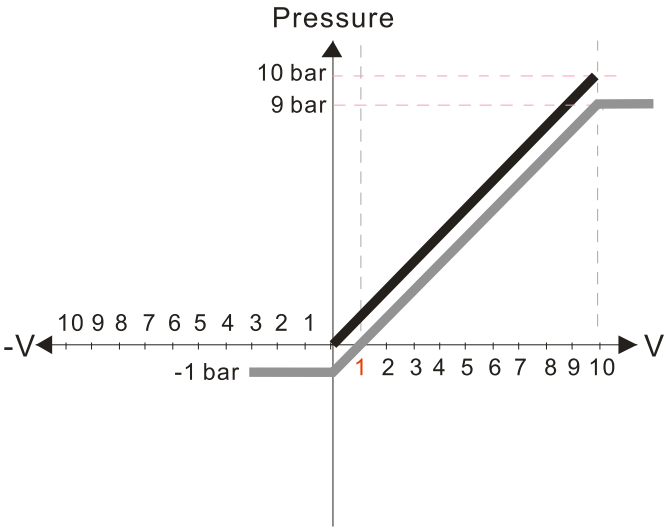

3. Step4: Pr.03-11 = 200%

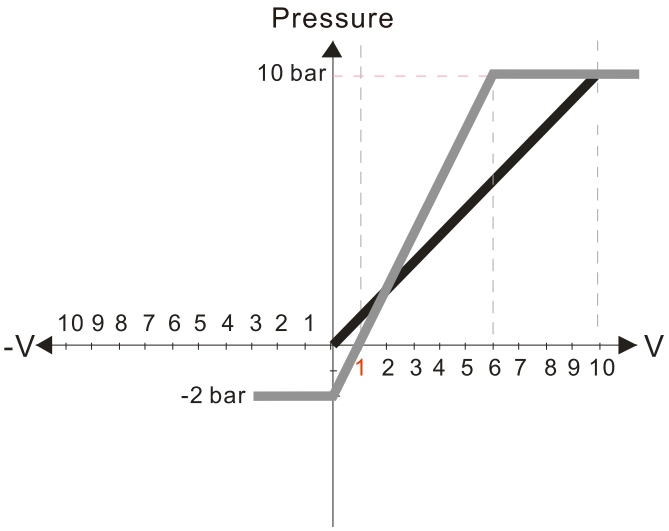

03-15 AI1 Analog Input Filter Time
03-16 AI2 Analog Input Filter Time

Default:0.01

Settings 0.00–20.00 sec.

- Analog signals inputted by the control terminals AI1 and AI2 mostly have noise. Noise affects the stability to control. Use the Input Noise Filter to create a more stable system.
- When the time constant setting is too large, the control is stable, but the control response is slow. When the time constant setting is too small, the control response is faster, but the control may be unstable. For optimal setting, adjust the setting based on the control stability or the control response.

03-19 Signal Loss Selection For AI1 Analog Input 4–20 mA

Default: 0

Settings 0: Disabled
1: Continue operation at the last frequency
2: Decelerate to 0 Hz
3: Stop immediately and display ACE

- Determines the treatment when the 4–20 mA signal is lost (AI1 (Pr.03-28 = 2)).
- When the setting is 1 or 2, the keypad displays the warning code “ANL”. It keeps blinking until the AI2 signal is recovered.
- When the drive stops, the condition that causes the warning does not exist , so the warning automatically disappears.

03-69 Signal Loss Selection For AI2 Analog Input 4–20 mA

Default: 0

Settings 0: Disabled
1: Continue operation at the last frequency
2: Decelerate to 0 Hz
3: Stop immediately and display ACE

- Determines the treatment when the 4–20 mA signal is lost (AI2 (Pr.03-29 = 2)).
- When the setting is 1 or 2, the keypad displays the warning code “ANL”. It keeps blinking until the AI2 signal is recovered.
- When the drive stops, the condition that causes the warning does not exist , so the warning automatically disappears.

03-20 Multi-function Output (AFM)

Default: 0

Settings 0–23

Summary of Function Settings

ID*	Functions	Descriptions
0	Output frequency (Hz)	Maximum frequency Pr.01-00 is processed as 100%.
1	Frequency command (Hz)	Maximum frequency Pr.01-00 is processed as 100%.
2	Motor speed (Hz)	Maximum frequency Pr.01-00 is processed as 100%.

ID*	Functions	Descriptions
3	Output current (rms)	(2.5 X drive rated current) is processed as 100%.
4	Output voltage	(2 X motor rated voltage) is processed as 100%.
5	DC bus voltage	450 V (900 V) = 100%
6	Power factor	-1.000–1.000 = 100%
7	Power	(2 X drive rated power) is processed as 100%.
9	AI1 Analog input	0–10 V = 0–100%
10	AI2 Analog input	0–10 V = 0–100%
21	RS-485 analog output	For InnerCOM analog output
22	Communication card analog output	Communication analog output for CMMP-BT01, CMM-PD02, CMM-DN02, CMM-EIP02 Terminal: AFM, Address: 26A0H
23	Constant voltage output	Pr.03-32 controls the voltage output level. 0–100% of Pr.03-32 corresponds to 0–10 V for AFM.

03-21 AFM Analog Output Gain

Default:100.0

Settings 0–500.0%

Adjusts the voltage level outputted to the analog meter from the analog signal (Pr.03-20) output terminal AFM of the drive.

03-22 AFM Analog Output in REV Direction

Default: 0

Settings 0: Absolute value in output voltage
1: Reverse output 0 V; forward output 0–10 V
2: Reverse output 5-0 V; forward output 5–10 V

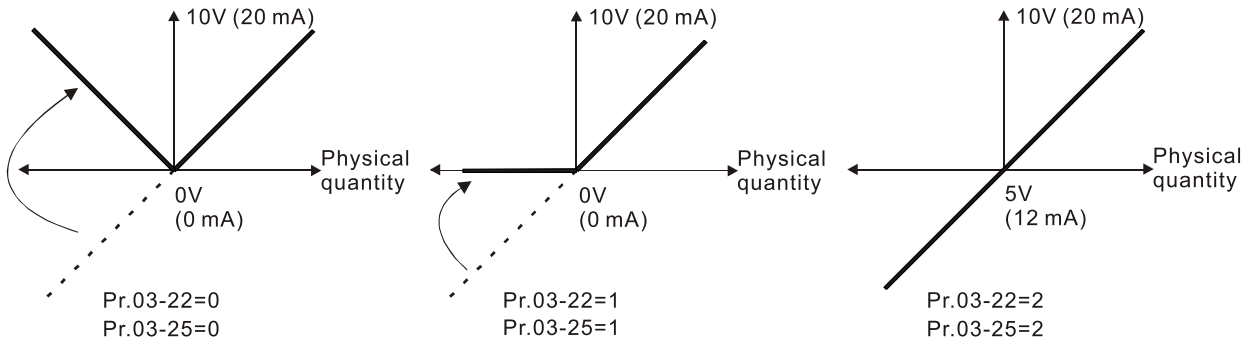

Selections for the analog output direction

03-27 AFM Output Bias

Default:0.00

Settings -100.00–100.00%

Example 1: AFM 0–10 V is set to the output frequency, the output equation is 10V × (output frequency / Pr.01-00) x Pr.03-21 + 10V x Pr.03-27

This parameter sets the corresponding voltage of the analog output 0.

03-28 AI1 Terminal Input Selection

Default: 2

Settings 0: 0–10 V
1: 0–20 mA
2: 4–20 mA

Use DIP switch to change voltage mode and current mode, refer to Chapter 06 for AI1 terminal instruction.

03-29 AI2 Terminal Input Selection

Default: 2

Settings 0: 0–10 V
1: 0–20 mA
2: 4–20 mA

Use DIP switch to change voltage mode and current mode, refer to Chapter 06 for AI2 terminal instruction.

03-30 PLC Analog Output Terminal Status

Default: 0

Settings bit 0: Reserved
bit 1: AFM

Displays the external multi-function output terminals used by PLC.

Use DIP switch to change voltage mode and current mode, refer to Chapter 06 for AI1 terminal instruction.

0=OFF
1=ON

Weights	2^{15}	2^{14}	2^{13}	2^{12}	2^{11}	2^{10}	2^{9}	2^{8}	2^{7}	2^{6}	2^{5}	2^{4}	2^{3}	2^{2}	2^{1}	2^{0}	
bit	15	14	13	12	11	10	9	8	7	6	5	4	3	2	1	0	← AFM

NOTE
2^7=128 2^6=64
2^5=32 2^4=16 2^3=8
2^2=4 2^1=2 2^0=1

Example: When Pr.03-30 displays 0001h (hex), it means that AFM is used by PLC.

0=Not used by PLC
1=Used by PLC

Weights	2^{7}	2^{6}	2^{5}	2^{4}	2^{3}	2^{2}	2^{1}	2^{0}	
bit	0	0	0	0	0	0	0	1	← AFM

Display value=bit 0x2^0
=1x2^0
=1

03-32 AFM DC Output Setting Level

Default:0.00

Settings 0.00–100.00%

03-35 AFM Output Filter Time

Default:0.01

Settings 0.00–20.00 sec.

03-44 Multi-function Output (MO) by AI Level Source

Default: 0

Settings 0: AI1
1: AI2

03-45 AI1 Upper Level 1

Default:50

Settings -100–100%

03-46 AI1 Lower Level 2

Default:10

Settings -100–100%

03-47 AI2 Upper Level 1

Default:50

Settings -100–100%

03-48 AI2 Lower Level 2

Default:10

Settings -100–100%

- MOx = 67: analog input level reached, to choose AI level source in Pr.03-44.
- If Pr.03-44 = 0, the MO activates when the AI input level is higher than the Pr.03-45; the MO stops when the AI input is lower than the Pr.03-46.
- If Pr.03-44 = 1, the MO activates when the AI input level is higher than the Pr.03-47: the MO stops when the AI input is lower than the Pr.03-48.
- When setting levels, Pr.03-45 > Pr.03-46, Pr.03-47 > Pr.03-48

03-50 Analog Input Curve Selection

Default: 0

Settings 0: Normal curve
1: Three-point curve of AI1
2: Three-point curve of AI2
3: Three-point curve of AI1 and AI2

03-51 AI1 Lowest Point

Default:4.00

Settings Pr.03-28 = 0, 0.00–10.00 V
Pr.03-28 = 1, 0.00–20.00 mA
Pr.03-28 = 2, 4.00–20.00 mA

03-52 AI1 Proportional Lowest Point

Default:0.00

Settings 0.00–100.00%

03-53 AI1 Mid-point

Default:12.00

Settings Pr.03-28 = 0, 0.00–10.00 V
Pr.03-28 = 1, 0.00–20.00 mA
Pr.03-28 = 2, 4.00–20.00 mA

03-54 AI1 Proportional Mid-point

Default:50.00

Settings 0.00–100.00%

03-55 AI1 Highest Point

Default:20.00

Settings Pr.03-28 = 0, 0.00–10.00 V
Pr.03-28 = 1, 0.00–20.00 mA
Pr.03-28 = 2, 4.00–20.00 mA

03-56 AI1 Proportional Highest Point

Default:100.00

Settings 0.00–100.00%

- When Pr.03-28 = 0, the AI1 setting is 0–10 V and the unit is voltage (V). When Pr.03-28 ≠ 0, the AI1 setting is 0–20 mA or 4–20 mA and the unit is current (mA).
- When you set the analog input AI1 to the frequency command, 100% corresponds to Fmax (Pr.01-00 Maximum Operation Frequency).
- Setting range: Pr.03-51 < Pr.03-53 < Pr.03-55
  The values for three proportional points (Pr.03-52, Pr.03-54 and Pr.03-56) have no limits. There is a linear calculation between two points.
- The output percentage becomes 0% when the AI1 input value is lower than the lowest point setting.
  Example:
  Pr.03-51 = 1V, Pr.03-52 = 10% The output is 0 % when AI1 input is lower than 1V. If the AI1 input swings between 1 V and 1.1 V, the drive's output frequency oscillates between 0% and 10%.

Pr.03-51 = 1 V; Pr.03-52 = 10%
Pr.03-53 = 5 V; Pr.03-54 = 50%
Pr.03-55 = 10 V; Pr.03-56 = 100%

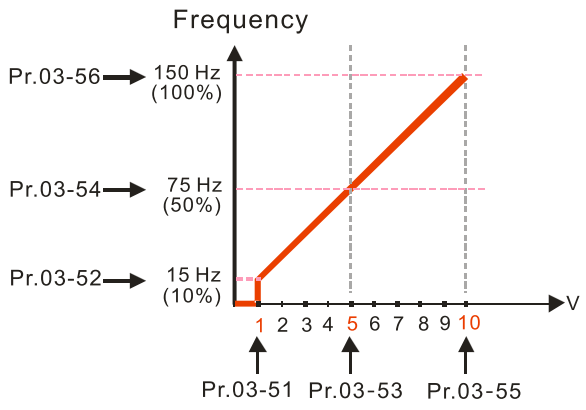

03-57 AI2 Lowest Point

Default:4.00

Settings Pr.03-29 = 0, 0.00–10.00 V
Pr.03-29 = 1, 0.00–20.00 mA
Pr.03-29 = 2, 4.00–20.00 mA

03-58 AI2 Proportional Lowest Point

Default:0.00

Settings 0.00–100.00%

03-59 AI2 Mid-point

Default:12.000

Settings Pr.03-29 = 0, 0.00–10.00 V
Pr.03-29 = 1, 0.00–20.00 mA
Pr.03-29 = 2, 4.00–20.00 mA

03-60 AI2 Proportional Mid-point

Default:50.00

Settings 0.00–100.00%

03-61 AI2 Highest Point

Default:20.00

Settings Pr.03-29 = 0, 0.00–10.00 V
Pr.03-29 = 1, 0.00–20.00 mA
Pr.03-29 = 2, 4.00–20.00 mA

03-62 AI2 Proportional Highest Point

Default:100.00

Settings 0.00–100.00%

- When Pr.03-29 ≠ 0, the AI2 is 0–20 mA or 4–20 mA and the unit is current (mA).
- When you set the analog input AI2 to be the frequency command, 100% corresponds to Fmax (Pr.01-00 Maximum Operation Frequency).
- Setting range: Pr.03-57 < Pr.03-59 < Pr.03-61
  The values for three proportional points (Pr.03-58, Pr.03-60 and Pr.03-62) have no limits. There is a linear calculation between two points.
- The output percentage becomes 0% when the AI2 input value is lower than the lowest point setting.
  Example:
  Pr.03-57 = 2 mA, Pr.03-58 = 10% The output is 0 % when AI2 input is lower than 2 mA.
  If the ACI input swings between 2 mA and 2.1 mA, the drive's output frequency oscillates between 0% and 10%.

[This page intentionally left blank]

04 Multi-step Speed Parameters

✓You can set this parameter during operation.

✓	04-00	1st Step Speed Frequency
✓	04-01	2nd Step Speed Frequency
✓	04-02	3rd Step Speed Frequency
✓	04-03	4th Step Speed Frequency
✓	04-04	5th Step Speed Frequency
✓	04-05	6th Step Speed Frequency
✓	04-06	7th Step Speed Frequency
✓	04-07	8th Step Speed Frequency
✓	04-08	9th Step Speed Frequency
✓	04-09	10th Step Speed Frequency
✓	04-10	11th Step Speed Frequency
✓	04-11	12th Step Speed Frequency
✓	04-12	13th Step Speed Frequency
✓	04-13	14th Step Speed Frequency
✓	04-14	15th Step Speed Frequency

Default: 0.00

Settings 0.00–599.00 Hz

- Use the multi-step speed command 1–4 / multi-step position command 1–4 of the multi-function input terminals (refer to the setting 1–4 of Pr.02-01–02-04 Multi-function Input Command) to select the multi-step speed command (the maximum is 15th step speed). Pr.04-00 to Pr.04-14 set the multi-step speed (frequency) as shown in the following diagram.
- The external terminal / digital keypad / communication controls the RUN and STOP commands with Pr.00-21.
- You can set each multi-step speed (frequency) between 0.00–180.00 Hz during operation.
- Explanation for the timing diagram of the multi-step speed and external terminals:

  The related parameter settings are:

  1. Pr.04-00–Pr.04-14: set the 1st–15th multi-step speed (to set the frequency of each step speed).
  2. Pr.02-01–Pr.02-04: set the multi-function input terminals (multi-step speed command 1–4).
- Related parameters:
  - Pr.01-22 JOG frequency setting
  - Pr.02-01 multi-function input command 1 (MI1)
  - Pr.02-02 multi-function input command 2 (MI2)
  - Pr.02-03 multi-function input command 3 (MI3)
  - Pr.02-04 multi-function input command 4 (MI4)

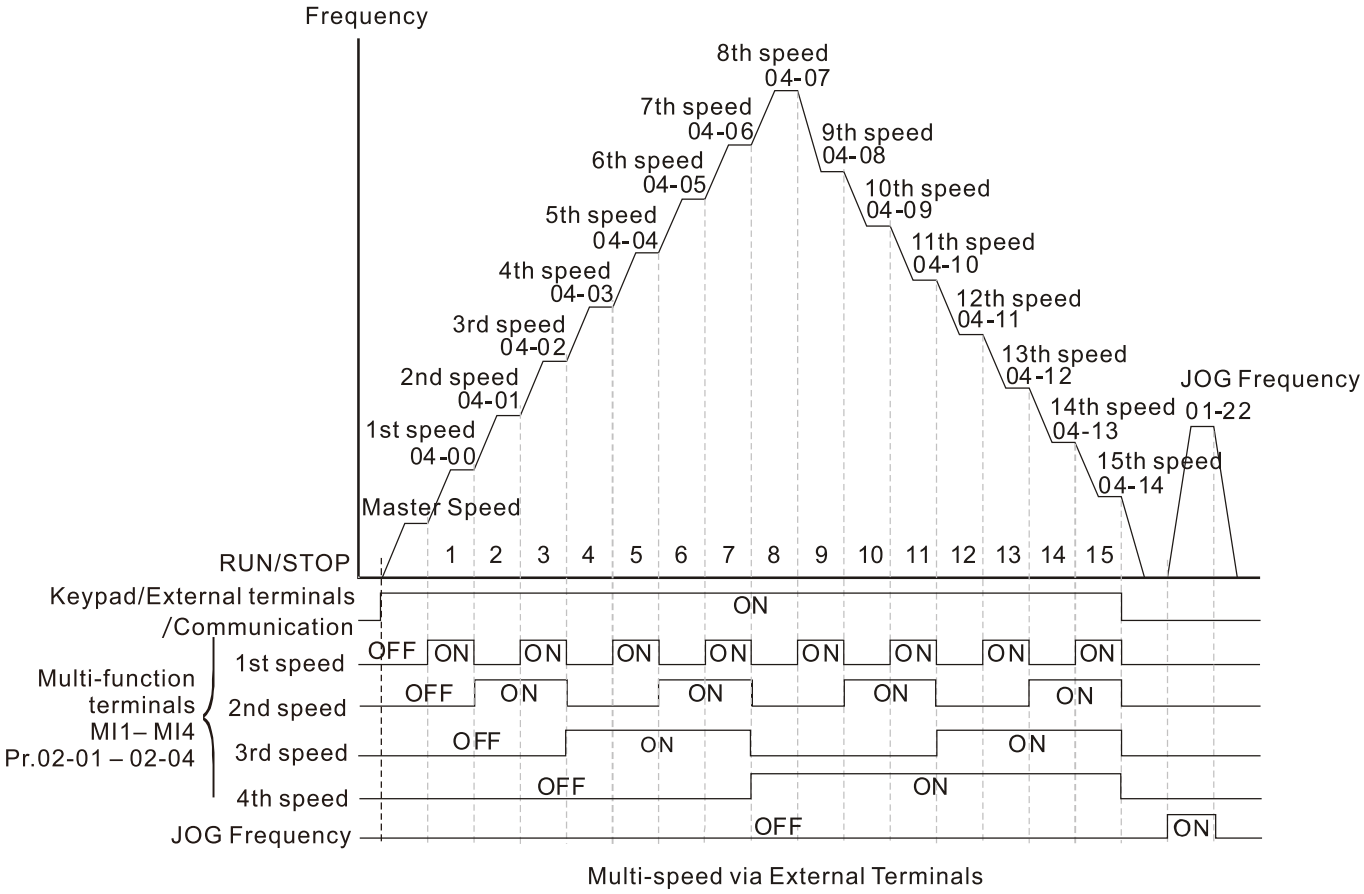

✓	**04-50**	PLC Buffer 0
✓	**04-51**	PLC Buffer 1
✓	**04-52**	PLC Buffer 2
✓	**04-53**	PLC Buffer 3
✓	**04-54**	PLC Buffer 4
✓	**04-55**	PLC Buffer 5
✓	**04-56**	PLC Buffer 6

Default: 0

Settings 0–65535

- If the built-in PLC function is not loaded in, then PLC buffer 0–19 (Pr.04-50–04-69) and PLC application parameters (Pr.04-70–04-99) can be flexibly used for PLC function, its setting range is 0–65535, and the default is 0.
- If the built-in PLC function is loaded in, Pr.04-50–04-99 become the settings for the built-in PLC function which is enabled. See the following pages for the explanations.
- After enabling the built-in PLC function, PLC buffer 0–6 are disabled.
- Refer to chapter 15 PLC Function Applications for the way to enable the built-in PLC function.

04-57 Pump System Configuration Setting

Default: 0

Settings	Source of frequency bit 0–3	00x0h: Digital keypad 00x1h: RS-485 communication (COM2) 00x8h: Communication card (does not include CANopen card)
	Source of operation bit 4–7	000xh: Digital keypad 001xh: RS-485 communication (COM2) 002xh: External terminals (MI1) 005xh: Communication card (does not include CANopen card)
	bit 8	Set to be backup master.
	bit 9	Display a PL00 warning when the backup master becomes the master.

- This parameter is to set the multi-pump configuration of the built-in PLC function. Refer to chapter 15 PLC Function Applications for the way to enable the built-in PLC function.
- Do the settings according to the different system statuses, refer to the table below.
  Because the backup master continues the pressure command from the master, it's invalid to set the source of frequency.

Pr.04-57	Suitable system
bit 0–3, source of frequency	The master (station address is 1)
bit 4–7, source of operation	The master (station address is 1), the backup master
bit 8, set to be the backup master	Backup master
bit 9, display a PL00 warning when the backup master becomes the master.	Backup master

- Example: When a multi-pump system is established, the AC motor drives connect with each other by Modbus communication, thus Pr.00-20, Pr.00-21 have to be RS-485 (COM1). The default of Pr.04-57 for the master of the multi-pump system is by using digital keypad, users press RUN, STOP button to control system, and press UP / DOWN to set target pressure. If the master has to connect with HMI, then set Pr.04-57 to be RS-485 (COM2), and connect with HMI and the COM2 of the master, now HMI can control the operation and frequency command of the master. Take notice of this, you cannot control the system by pressing RUN and STOP when using HMI.
- When switching frequency command, the system takes the present source of frequency as a reference of target pressure. For example, if the frequency command is from the communication card, the system operates with 10 bar according to the target pressure of the communication card; but when the frequency command is from Modbus, the system operates with 4 bar according to the target pressure of Modbus.
- Switch the operation or stop by using MI1 when bit 4–7 set to be 002xh, refer to Pr.02-00 for more details.

Source of operation / Source of frequency	000xh: Digital keypad	001xh: RS-485 communication	002xh: External terminal (MI1)	005xh: Communication card (does not include CANopen card)
00x0h: Digital keypad	Hex: 0000h Decimal: 0	Hex: 0010h Decimal: 16	Hex: 0020h Decimal: 32	Hex: 0050h Decimal: 80
00x1h: RS-485 communication	Hex: 0001h Decimal: 1	Hex: 011h Decimal: 17	Hex: 021h Decimal: 33	Hex: 051h Decimal: 81
00x8h: Communication card (does not include CANopen card)	Hex: 0008h Decimal: 8	Hex: 0018h Decimal: 24	Hex: 0028h Decimal: 40	Hex: 0058h Decimal: 88

📖 bit 8: Set to be backup master. If you want the station address to be backup master, then set bit 8 to be 1, and key in 256.

If you want a warning is displayed on the digital keypad when the backup master switches, then set bit 9 to be 768 to display PL00 warning.

04-58 Weekdays, weekend, specific day schedule

Default: 0

Settings bit 0: 1 (weekdays)
bit 1: 1 (weekend)
bit 2: 1 (specific day)

📖 This function is built-in scheduled function of PLC. Refer to chapter 15 PLC Function Applications for the way to enable the built-in PLC function.

📖 Before using the scheduled function, adjust time in Pr.12-93–12-96 and install a battery. If not doing so, the AC motor drive displays warnings to adjust the RTC (rCAL) and has low battery voltage (LBAt).

📖 Refer to section 7-7 RTC Function and Battery

📖 To meet water requirements at different time, use this scheduled function to arrange the target pressure in the specific time interval for saving energy. The schedule can be divided into three phases: weekdays, weekend, specific day. Set them individually and:

1. The priority is specific day > weekend > weekdays.
2. The next time interval has to be larger than the previous one, otherwise the following time intervals are invalid, and the pump only operates during the valid time interval.
3. These parameters cannot been set randomly, if there is any blank in the middle, then the settings after the blank are invalid.
4. This can be less than five-time intervals.
5. In case of crossing day, follow the operating pressure setting in the last valid time interval of the previous day.

The schematic diagrams

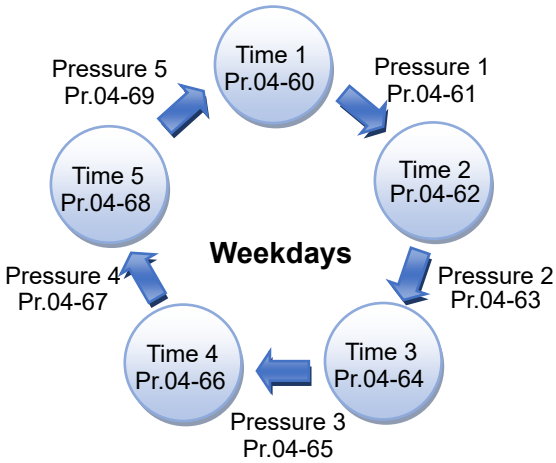

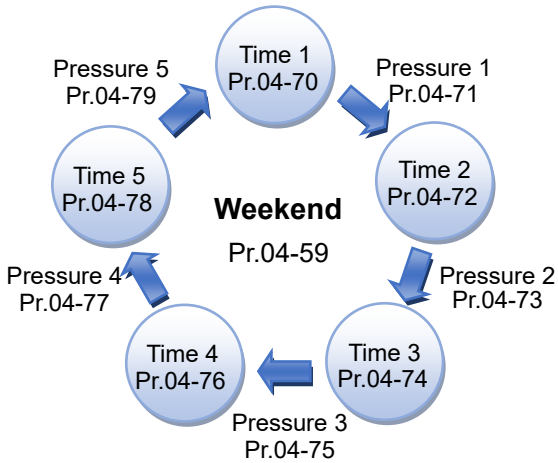

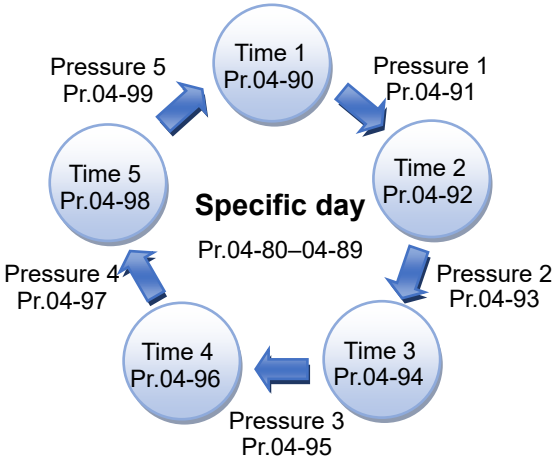

Example:

Setting Range	Weekdays					Weekend		Weekdays	Specific day					Weekend
									2/1	2/2	2/3	2/4	2/5	
Time	Mon.	Tue.	Wed.	Thur.	Fri.	Sat.	Sun.	Mon.	Tue.	Wed.	Thur.	Fri.	Sat.	Sun.
00:00	4	10	10	10	10	10	4	4	10	8	8	8	8	8
1:00 AM	4	10	10	10	10	5	5	4	10	8	8	8	8	5
2:00 AM	2	2	2	2	2	5	5	2	10	8	8	8	8	5
3:00 AM	2	2	2	2	2	5	5	2	1	1	1	1	1	5
4:00 AM	2	2	2	2	2	5	5	2	1	1	1	1	1	5
9:00 PM	10	10	10	10	10	7	7	10	6	6	6	6	6	7
10:00 PM	10	10	10	10	10	7	7	10	8	8	8	8	8	7
11:00 PM	10	10	10	10	10	4	4	10	8	8	8	8	8	4
00:00	10	10	10	10	10	4	4	10	8	8	8	8	8	4

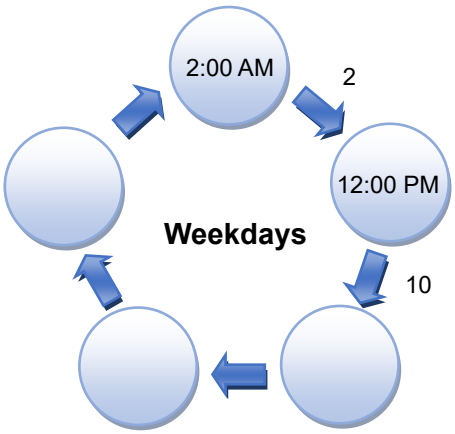

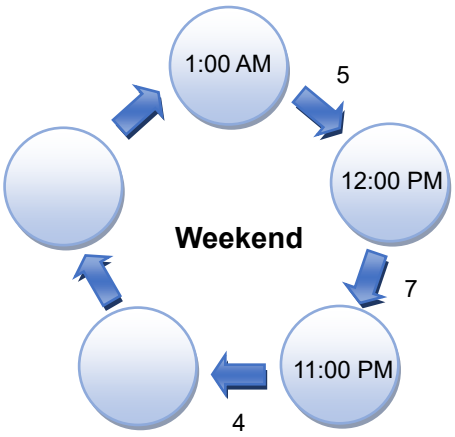

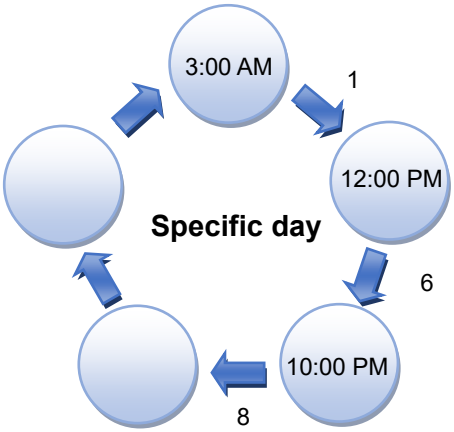

04-59 Weekend Setting

Default: 0

Settings 0: Saturday, Sunday
1: Sunday

Define the days of weekend according to requirements. Set 0 means the weekdays are from Monday to Friday; set 1 means the weekdays are from Monday to Saturday.

04-60	Weekdays Start Time 1
04-62	Weekdays Start Time 2
04-64	Weekdays Start Time 3
04-66	Weekdays Start Time 4
04-68	Weekdays Start Time 5
04-70	Weekend Start Time 1
04-72	Weekend Start Time 2
04-74	Weekend Start Time 3
04-76	Weekend Start Time 4
04-78	Weekend Start Time 5
04-90	Specific Day Start Time 1

04-92	Specific Day Start Time 2
04-94	Specific Day Start Time 3
04-96	Specific Day Start Time 4
04-98	Specific Day Start Time 5

Default: 00:00

Settings 00:00~23:59

04-61	Weekdays Target Pressure 1
04-63	Weekdays Target Pressure 2
04-65	Weekdays Target Pressure 3
04-67	Weekdays Target Pressure 4
04-69	Weekdays Target Pressure 5
04-71	Weekend Target Pressure 1
04-73	Weekend Target Pressure 2
04-75	Weekend Target Pressure 3
04-77	Weekend Target Pressure 4
04-79	Weekend Target Pressure 5
04-91	Specific Day Target Pressure 1
04-93	Specific Day Target Pressure 2
04-95	Specific Day Target Pressure 3
04-97	Specific Day Target Pressure 4
04-99	Specific Day Target Pressure 5

Default: 0

Settings 0–65535

The pressure unit is converted according to the decimal point setting of Pr.00-25.

Example: 0–65535 (when Pr.00-25 is set to no decimal place)

0.0–6553.5 (when Pr.00-25 is set to one decimal place)

0.00–655.35 (when Pr.00-25 is set to two decimal places)

0.000–65.535 (when Pr.00-25 is set to three decimal places)

The maximum of the system pressure value is Pr.00-26.

04-80	Specific Day Start Date 1
04-81	Specific Day End Date 1
04-82	Specific Day Start Date 2
04-83	Specific Day End Date 2
04-84	Specific Day Start Date 3
04-85	Specific Day End Date 3
04-86	Specific Day Start Date 4
04-87	Specific Day End Date 4
04-88	Specific Day Start Date 5

04-89 Specific Day End Date 5

Default: 00.00

Settings MM.DD (MM = month, 01–12; DD = date, 01–31)

- All the specific days operate the same scheduled time and pressure. That means when time is the specific days which set in Pr.04-80–04-89, the schedule executes according to Pr.04-90–04-99 settings.
- Set the date to be 00.00 means the parameter is invalid.
- The setting of the specific days starts from the start date and end on the end date.
  Example: If the setting starts from 1/2 and ends on 1/3, then both 1/2 and 1/3 are the specific days for operation.
- If the end date is smaller than the start date, then this operation continues to a new year.
  Example: If the setting starts from 12/30 and ends on 1/2, then 12/30, 12/31, 1/1, 1/2 are the specific days for operation.

05 Motor Parameters

✓You can set this parameter during operation.

05-00 Motor Parameter Auto-tuning

Default: 0

Settings 0: No function
5: Rolling auto-tuning for motor
13: High frequency stall test for motor

05-01 Full-Load Current for Induction Motor 1 (A)

Default: Depend on the model power

Settings 10–120% of the drive's rated current

📖 Set this value according to the rated current of the motor as indicated on the motor nameplate. The default is 90% of the drive's rated current.

Example: The rated current for a 7.5 HP (5.5 kW) is 25 A. The default is 22.5 A.

The setting range is between 2.5–30 A of the rated current.

25 × 10% = 2.5 A 25 × 120% = 30 A

✓ 05-02 Rated Power for Induction Motor 1 (kW)

Default: Depend on the model power

Settings 0.00–655.35 kW

📖 Sets the rated power for the motor. The default is the drive's power value.

✓ 05-03 Rated Speed for Induction Motor 1 (rpm)

Default: Depend on the motor's number of poles

Settings 0~xxxxx rpm (Depend on the motor's number of poles)
1710 (60 Hz 4 poles); 1410 (50 Hz 4 poles)

📖 Set the rated speed for the motor as indicated on the motor nameplate.

05-04 Number of Poles for Induction Motor 1

Default: 4

Settings 2–20

📖 Set the number poles for the motor (must be an even number).

📖 Set up Pr.01-01 and Pr.05-03 before setting up Pr.05-04 to make sure the motor operates normally.

05-05 No-Load Current for Induction Motor 1 (A)

Default: Depend on the model power

Settings 0.00–Pr.05-01 default

📖 The default is 40% of motor rated current.

05-06	Stator Resistance (Rs) for Induction Motor 1
05-07	Rotor Resistance (Rr) for Induction Motor 1

Default: Depend on the model power

Settings 0.000–65.535 Ω

05-08	Magnetizing Inductance (Lm) for Induction Motor 1
05-09	Stator Inductance (Lx) for Induction Motor 1

Default: 0.0

Settings 0.0–6553.5 mH

	05-26	Motor Accumulated Watt in Every Millisecond (W-msec.)
	05-27	Motor Accumulated Watt in Every Second (W-sec.)
	05-28	Motor Accumulated Watt in Every Hour (W-hour)
	05-29	Motor Accumulated Kilowatt in Every Hour (kW-hour)
	05-30	Motor Accumulated Megawatt in Every Hour (MW-hour)

Default: 0.0

Settings Read only

- Pr.05-26–05-30 records the amount of power the motors consume. The accumulation begins when the drive is activated and the record is saved when the drive stops or turns OFF. The amount of consumed watts continues to accumulate when the drive is activated again. To clear the accumulation, set Pr.00-02 to 5 to return the accumulation record to 0.
- The accumulated total kilowatts of the motor per hour = Pr.05-30 x 1000000 + Pr.05-28 x 1000 + Pr.05-28 Wh

  Example: When Pr.05-30 = 76 MWh, Pr.05-29 = 150 kWh, Pr.05-28 = 400 Wh (or 0.4 kWh), the motor accumulated watt in every hour = 76 x 1000000 + 150 x 1000 + 400 = 76150400 Wh = 76150.4 kWh

05-31	Accumulated Motor Operation Time (Minutes)

Default: 0

Settings 0–1439

05-32	Accumulated Motor Operation Time (Days)

Default: 0

Settings 0–65535

- Use Pr.05-31 and Pr.05-32 to record the motor operation time. To clear the operation time, set Pr.05-31 and Pr.05-32 to 00. An operation time shorter than 60 seconds is not recorded.

05-33	Induction Motor (IM) or Permanent Magnet Synchronous AC Motor (PM) Selection

Default: 3

Settings 0: IM (Induction motor)
1: SPM (Surface permanent magnet synchronous AC motor)
2: IPM (Interior permanent magnet synchronous AC motor)
3: Delta MSI series motor

05-34 Motor Full-load Current

Default: #.#

Settings 0–120% of the drive's rated current

05-35 Motor Rated Power

Default: #.#

Settings 0.00–655.35 kW

📖 Sets the rated power for the motor. The default is the drive's power value.

05-36 Motor Rated Speed

Default: 3000

Settings 0–65535 rpm

05-37 Number Of Poles for A Motor

Default: Differs from models (6 / 8)

Settings 0–65535

05-39 Stator Resistance for A Motor

Default: 0.000

Settings 0.000–65.535 Ω

05-40 Motor Ld

Default: 0.00

Settings 0.00–655.35 mH

05-41 Motor Lq

Default: 0.00

Settings 0.00–655.35 mH

05-43 Ke Parameter of a Motor

Default: 0

Settings 0.0~6553.5 V/krpm

📖 Pr.05-34–05-43 which are related with the MSI motor that corresponds with MPD enter automatically.

[This page intentionally left blank]

06 Protection Parameters (1)

You can set this parameter during operation.

06-00 Low Voltage Level

Default: 360.0

Settings 300.0–440.0 V_{DC}

- Set the Low Voltage (LV) level. When the DC bus voltage is lower than Pr.06-00, a LV fault is triggered, and the drive stops output then the motor coasts to a stop.
- If the Lv fault is triggered during operation, the drive stops output and the motor coasts to a stop. There are three Lv faults: LvA (Lv during acceleration), Lvd (Lv during deceleration), and Lvn (Lv in constant speed) that are triggered according to the status of acceleration or deceleration. You must press RESET to clear the Lv fault. The drive automatically restarts if you set to restart after momentary power loss (refer to Pr.07-06 Restart after Momentary Power Loss and Pr.07-07 Allowed Power Loss Duration for details).
- If the Lv fault is triggered when the drive is in STOP status, the drive displays LvS (Lv during stop). The error will not be recorded, and the drive restarts automatically when input voltage is higher than the low voltage level 60V (460V models).

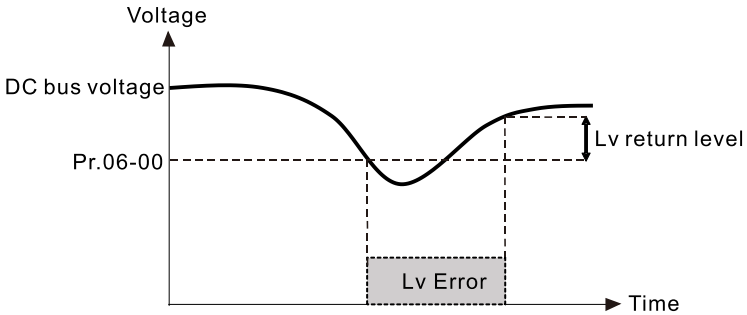

06-01 Over-voltage Stall Prevention

Default: 760.0

Settings 0: No function
0.0–900.0 V_{DC}

- Setting Pr.06-01 to 0.0 disables the over-voltage stall prevention function.
- Setting Pr.06-01 to a value > 0.0 enables the over-voltage stall prevention. This setting refers to the power supply system and loading. If the setting is too low, then over-voltage stall prevention is easily activated, which may increase deceleration time.
- If the value exceeds OV level (see the table below), then OV stall function is disabled.

Voltage	OV Stall	OV	Settings
460V Models	760 V_{DC}	820 V_{DC}	0–900 V_{DC}

Related parameters:

- Pr.01-13, Pr.01-15, Pr.01-17, Pr.01-19 Deceleration Time 1–4
- Pr.02-13 multi-function output terminal 1 (RY1) MOx = 23: over-voltage stall prevention
- Pr.02-14 multi-function output terminal 2 (RY2) MOx = 23: over-voltage stall prevention
- Pr.02-16 multi-function output terminal 3 (MO) MOx = 23: over-voltage stall prevention
- Pr.06-02 Selection for Over-voltage Stall Prevention.

06-02 Selection for Over-voltage Stall Prevention

Default: 0

Settings 0: Traditional over-voltage stall prevention
1: Smart over-voltage stall prevention

- Use this function when you are unsure about the load inertia. When stopping under normal load, the over-voltage does not occur during deceleration and meet the deceleration time setting. Sometimes it may not stop due to over-voltage during decelerating to STOP when the load regenerative inertia increases. In this case, the AC motor drive extends the deceleration time automatically until the drive stops.
- When you set Pr.06-02 to 0, during deceleration the motor exceeds the synchronous speed due to load inertia. In this case, the motor becomes an electrical generator. The DC bus voltage may exceed its maximum allowable value due to motor regeneration in some situations, such as motor's loading inertia being too high or drive's deceleration time being set too short. When you enable traditional over-voltage stall prevention and the DC bus voltage detected is too high, the drive stops decelerating (output frequency remains unchanged) until the DC bus voltage drops below the setting value.

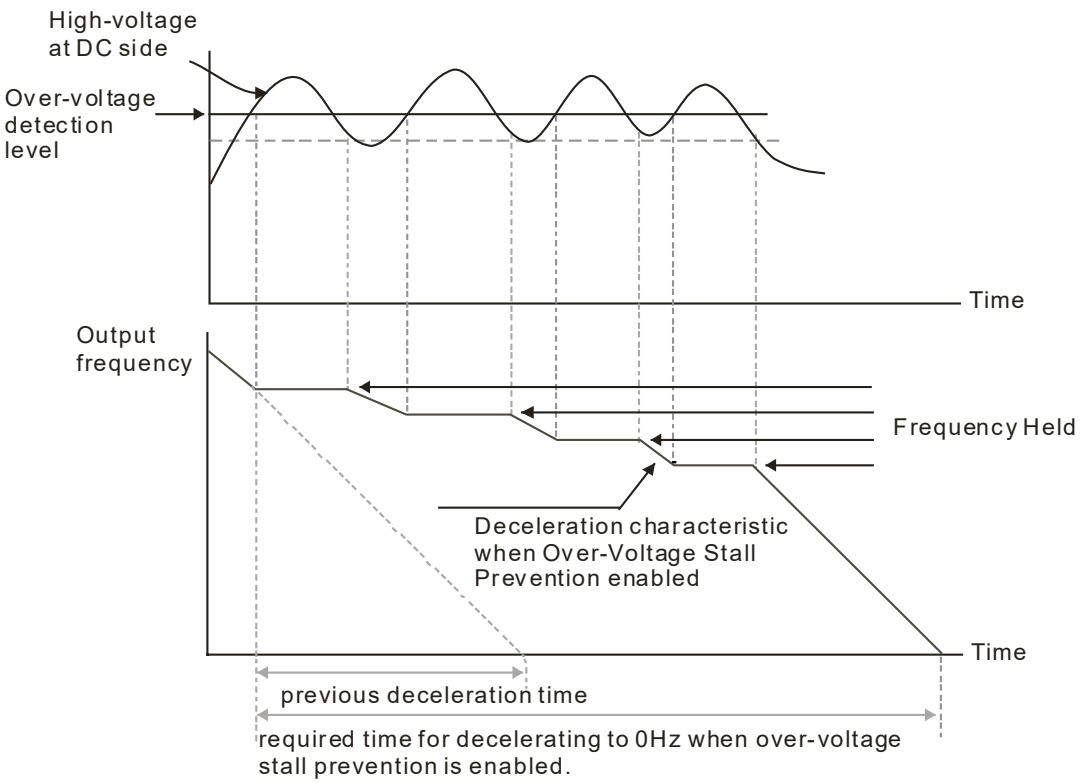

When you set Pr.06-02 to 1 to use smart over-voltage stall prevention during deceleration, the drive maintains the DC bus voltage when decelerating and prevents the drive from OV.

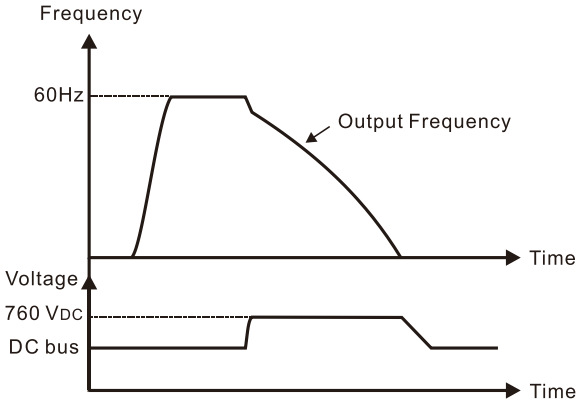

460V Models

When you enable the over-voltage stall prevention, the drive's deceleration time is longer than the setting.

If the deceleration time affects your application, it is not recommended to use this function. See the following guides for troubleshooting.

- Increase the deceleration time to a proper value.

Related parameters:

- Pr.01-13, Pr.01-15, Pr.01-17, Pr.01-19 Deceleration Time 1–4
- Pr.02-13 multi-function output terminal 1 (RY1) MOx = 23: over-voltage stall prevention
- Pr.02-14 multi-function output terminal 2 (RY2) MOx = 23: over-voltage stall prevention
- Pr.02-16 multi-function output terminal 3 (MO) MOx = 23: over-voltage stall prevention
- Pr.06-01 Over-voltage Stall Prevention

06-03 Over-current Stall Prevention during Acceleration

Default: 120

Settings Normal duty: 0–150%
(100% corresponds to the rated current of the drive)

If the motor load is too large or the drive's acceleration time is too short, the output current of the drive may be too high during acceleration, and it may cause motor damage or trigger protection functions (OL or OC). Use this parameter to prevent these situations.

During acceleration, the output current of the drive may increase abruptly and exceed the setting value of Pr.06-03. In this case, the drive stops accelerating and keeps the output frequency constant, and then continues to accelerate until the output current decreases.

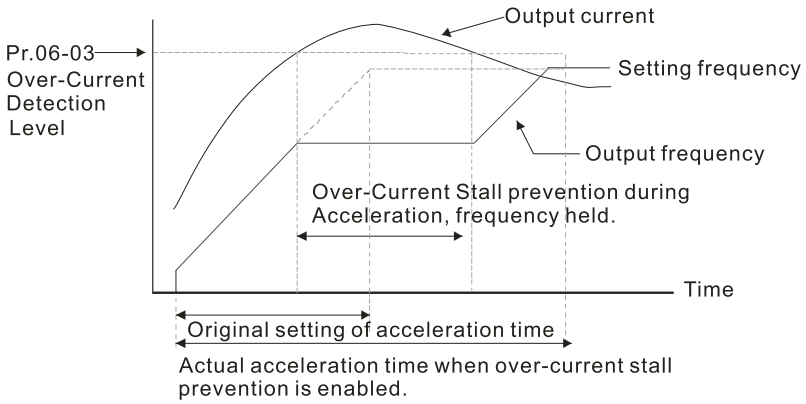

Refer to Pr.06-16 for more details of stall level in flux weakening region. The protection curve is as shown below:

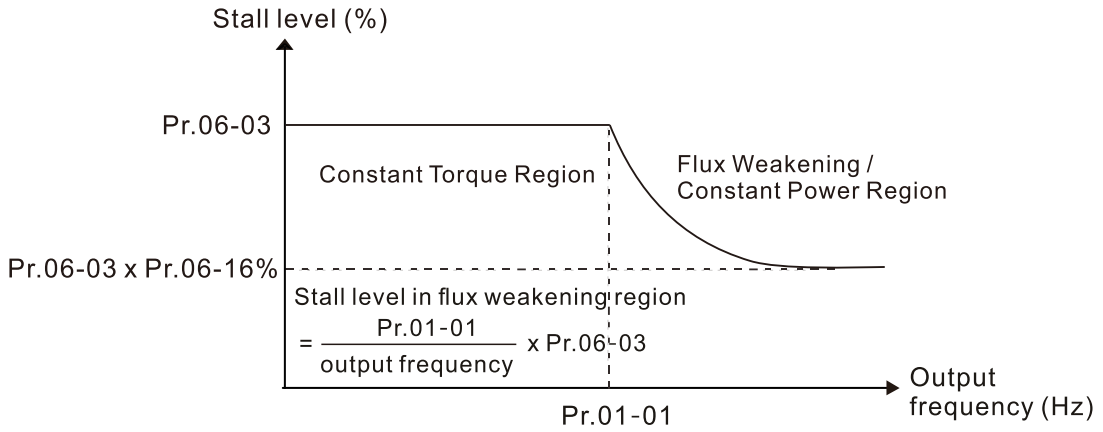

When you enable the over-current stall prevention, the drive's acceleration time is longer than the setting.

When the over-current stall prevention occurs because the motor capacity is too small or operates in the default, decrease the Pr.06-03 setting value.

If you encounter any problem with the acceleration time, refer to the following guides for troubleshooting.

- Increase the acceleration time to a proper value.
- Set Pr.01-44 Auto-Acceleration and Auto-Deceleration Setting to 1, 3 or 4. (auto-acceleration)

Related parameters:

- Pr.01-12, 01-14, 01-16, 01-18 Acceleration Time 1–4
- Pr.01-44 Auto-Acceleration and Auto-Deceleration Setting
- Pr.02-13 multi-function output terminal 1 (RY1) MOx = 23: over-voltage stall prevention
- Pr.02-14 multi-function output terminal 2 (RY2) MOx = 23: over-voltage stall prevention
- Pr.02-16 multi-function output terminal 3 (MO) MOx = 23: over-voltage stall prevention

06-04 Over-current Stall Prevention during Operation

Default: 120

Settings Normal duty: 0–150%
(100% corresponds to the rated current of the drive)

This is a protection for the drive to decrease output frequency automatically when the motor overloads abruptly during constant motor operation.

If the output current exceeds the setting value for Pr.06-04 when the drive is operating, the drive decelerates according to the Pr.06-05 setting to prevent the motor from stalling. The lower limit for the over-current stall prevention is determined by the maximum value among 0.5 Hz, Pr.01-07 and Pr.01-11.

If the output current is lower than the setting value for Pr.06-04, the drive accelerates (according to Pr.06-05) again to the setting frequency.

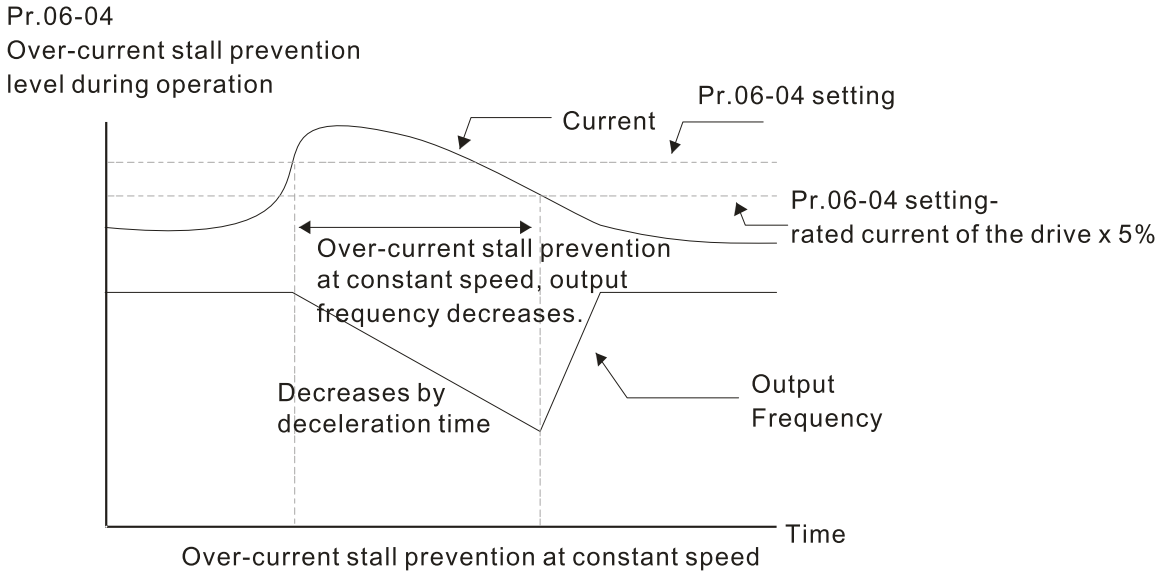

06-05 Acceleration / Deceleration Time Selection for Stall Prevention at Constant Speed

Default: 0

Settings
0: By current acceleration / deceleration time
1: By the first acceleration / deceleration time
2: By the second acceleration / deceleration time
3: By the third acceleration / deceleration time
4: By the fourth acceleration / deceleration time
5: By auto-acceleration / auto-deceleration

Set the acceleration / deceleration time selection when stall prevention occurs at constant speed.

06-06 Over-torque Detection Selection (Motor 1)

Default: 0

Settings
0: No function
1: Continue operation after over-torque detection during constant speed operation
2: Stop after over-torque detection during constant speed operation
3: Continue operation after over-torque detection during RUN
4: Stop after over-torque detection during RUN

06-07 Over-torque detection level (motor 1)

Default: 120

Settings 10–250% (100% corresponds to the rated current of the drive)

06-08 Over-torque Detection Time (Motor 1)

Default: 0.1

Settings 0.0–60.0 sec.

When the output current exceeds the over-torque detection level (Pr.06-07) and also exceeds the over-torque detection time (Pr.06-08), the over-torque detection follows the setting of Pr.06-06.

When you set Pr.06-06 to 1 or 3, an ot1 warning displays while the drive keeps running. The

warning remains on until the output current is smaller than 5% of the over-torque detection level.

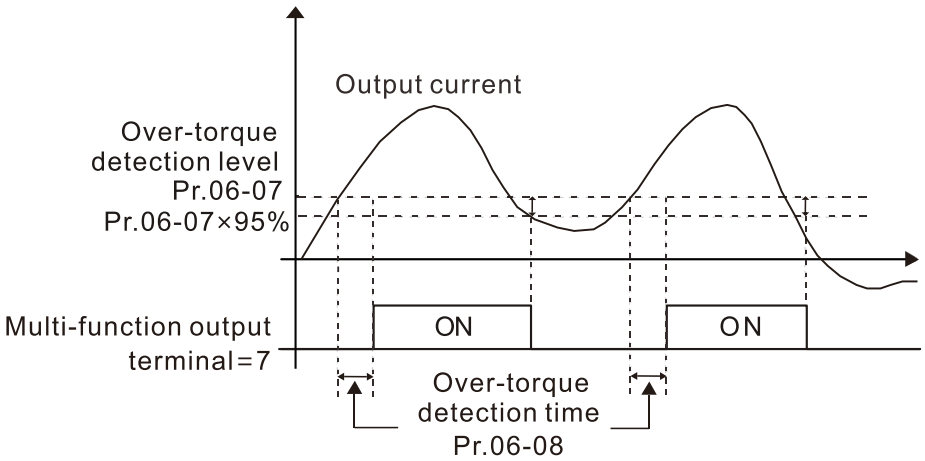

When you set Pr.06-06 to 2 or 4, an ot1 warning displays and the drive stops running after over-torque detection. The drive keeps running after you manually reset it.

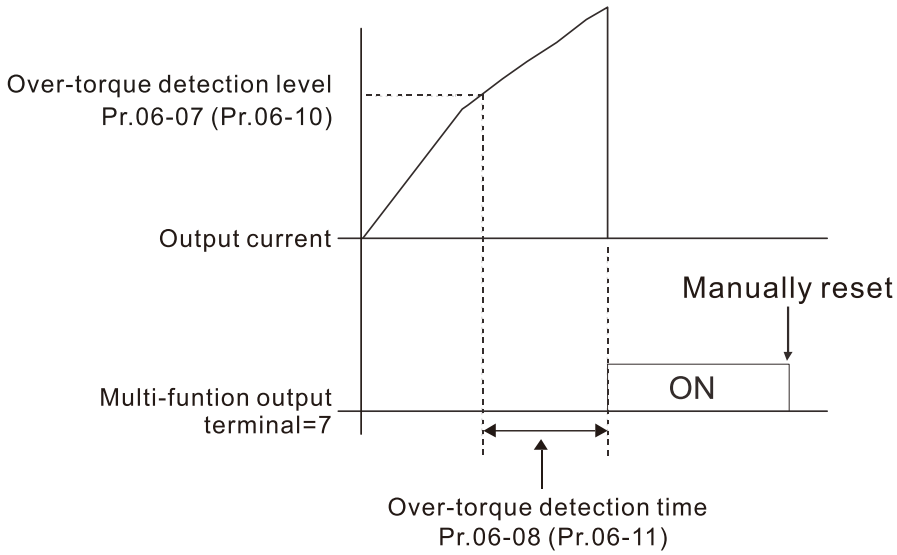

06-13 Electronic Thermal Relay Selection 1 (Motor 1)

Default: 2

Settings 1: Standard motor (motor with fan on the shaft)
2: Disabled

Prevent self-cooled motor from overheating under low speed. Use an electronic thermal relay to limit the drive's output power.

Setting the parameter to 1 is suitable for standard motor (motor fan is fixed on the rotor shaft). For this kind of motor, the cooling capacity is lower in low speed; therefore, the action of an electronic thermal relay reduces the action time to ensure the life of motor.

When the power is cycled frequently, if the power is switched OFF, the electronic thermal relay protection is reset; therefore, even setting the parameter to 0 or 1 may not protect the motor well. If there are several motors connected to one drive, install an electronic thermal relay in each motor.

06-14 Electronic Thermal Relay Action Time 1 (Motor 1)

Default: 60.0

Settings 30.0–600.0 sec.

- Set the parameter to 150% of motor rated current and use with the setting of Pr.06-14 to prevent motor damage due to overheating. When it reaches the setting, the drive displays “EoL1”, and the motor free runs to stop.
- Use this parameter to set the action time of the electronic thermal relay. It works based on the I2t characteristic curve of electronic thermal relay, the output frequency and current of the drive, and the operation time to prevent the motor from overheating.

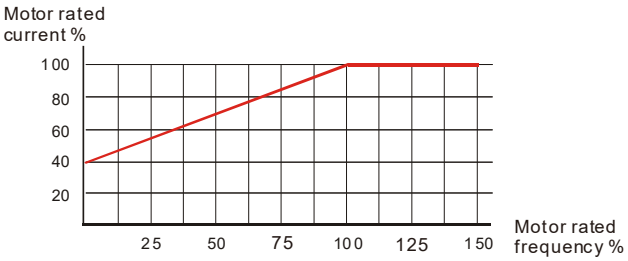

Motor cooling curve with shaft-fixed fan

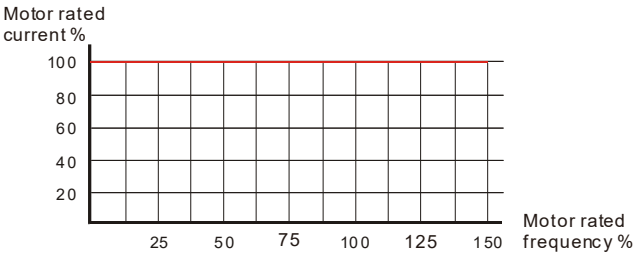

Motor cooling curve with independent fan

- The action of the electronic thermal relay depends on the settings for Pr.06-13.

  Pr.06-13 sets to 1 (using standard motor):

  When the output current of the drive is higher than 150% of the motor rated current (refer to the motor cooling curve with shaft-fixed fan), the drive starts to count the time. The electronic thermal relay acts when the accumulated time exceeds Pr.06-14.

  The actual electronic thermal relay action time adjusts according to the drive output current (shown as the motor loading rate %). The action time is short when the current is high, and the action time is long when the current is low. Refer to the following chart:

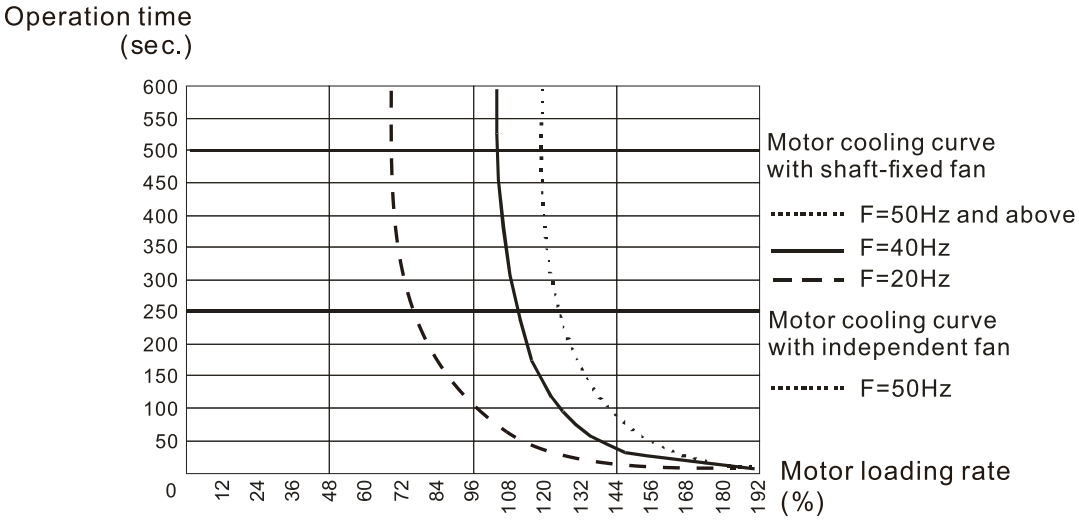

06-15 Temperature Level Overheat (OH) Warning

Default: 105.0

Settings 0.0–110.0ºC

The trigger level of oH1, oH2 are as shown below.

Level	oH1: IGBT overheating	oH2: Heatsink overheating
Trigger the alarm level	Pr.06-15	-
Auto-reset alarm level	Pr.06-15 - 5ºC	-
Trigger the fault level	115ºC	95ºC
Manual reset fault level	115 ºC - 10 ºC = 105ºC	95ºC - 10ºC = 85ºC

06-16 Stall Prevention Limit Level (Weak Magnetic Field Current Stall Prevention Level)

Default: 100

Settings 0–100% (Refer to Pr.06-03)

Set the over-current stall prevention level when operation frequency is larger than Pr.01-01.

Example: When Pr.06-03 = 150%, Pr.06-04 = 100% and Pr.06-16 = 80%.

When the operation frequency is larger than Pr.01-01, the lowest over-current stall prevention level during acceleration is:

Pr.06-03 × Pr.06-16 = 150 × 80% = 120%. (Refer to Pr.06-03 diagram for the protection curve.)

Pr.06-16 is invalid when the over-current stall prevention activates according to Pr.06-04 at constant speed.

06-17 Fault Record 1
06-18 Fault Record 2
06-19 Fault Record 3
06-20 Fault Record 4
06-21 Fault Record 5
06-22 Fault Record 6

Default: 0

Display

0: No fault record

1: Over-current during acceleration (ocA)

2: Over-current during deceleration (ocd)

3: Over-current during steady operation (ocn)

4: Ground fault (GFF)

6: Over-current at stop (ocS)

7: Over-voltage during acceleration (ovA)

8: Over-voltage during deceleration (ovd)

9: Over-voltage during constant speed (ovn)

10: Over-voltage at stop (ovS)

11: Low-voltage during acceleration (LvA)

12: Low-voltage during deceleration (Lvd)

13: Low-voltage at constant speed (Lvn)
14: Low-voltage at stop (LvS)
15: Phase loss protection (orP)
16: IGBT overheating (oH1)
17: Heatsink overheating (oH2)
18: IGBT temperature detection failure (tH1o)
19: Capacitor hardware error (tH2o)
21: Over load (oL)
22: Electronics thermal relay 1 protection (EoL1)
24: Motor overheating PTC-130 / KTY-84-130 (oH3)
26: Over torque 1 (ot1)
28: Under current (uC)
31: EEPROM read error (cF2)
33: U-phase error (cd1)
34: V-phase error (cd2)
35: W-phase error (cd3)
36: cc hardware error (Hd0)
37: oc hardware error (Hd1)
40: Auto-tuning error (AUE)
41: PID loss ACI (AFE)
48: ACI loss (ACE)
49: External fault (EF)
51: External base block (bb)
52: Password is locked (Pcod)
54: Illegal command (CE1)
55: Illegal data address (CE2)
56: Illegal data value (CE3)
57: Data is written to read-only address (CE4)
58: Modbus transmission time-out (CE10)
79: U-phase over-current before run (Aoc)
80: V-phase over-current before run (boc)
81: W-phase over-current before run (coc)
82: U-phase output phase loss (oPL1)
83: V-phase output phase loss (oPL2)
84: W-phase output phase loss (oPL3)
87: Low frequency overload protection (oL3)
89: Rotor position detection error (RoPd)
90: Force to stop (FStp)
98: Fire mode output (Fire)
140: oc hardware error (Hd6)
141: GFF occurs before run (b4GFF)
142: Auto-tune error 1 (AuE1) (DC test stage)

143: Auto-tune error 2 (AuE2) (high frequency stall stage)
144: Auto-tune error 3 (AuE3) (rotation test stage)
221: High water pressure (HPS)
222: Low water pressure (LPS)
223: Dry pump (dryE)
224: Water leaking (pipe explosion) (LEKE)
225: Clogged pipe (JAME)
226: RTC error (rtF)
227: Dry pump curve auto-measuring (dAUE)

- The parameters record when the fault occurs and forces a stop.
- When low-voltage at stop fault (LvS) occurs, the fault is not recorded. When low-voltage during operation faults (LvA, Lvd, Lvn) occur, the faults are recorded.

06-23 Fault Output Option 1
06-24 Fault Output Option 2
06-25 Fault Output Option 3
06-26 Fault Output Option 4

Default: 0

Settings 0–65535 (refer to bit table for fault code)

- Use these parameters with multi-function output terminal (set Pr.06-23–Pr.06-26 to 35–38) for the specific requirement. When the fault occurs, the corresponding terminals activate. Convert the binary value to decimal value before you enter the value for Pr.06-23–Pr.06-26.

Fault Code	bit0	bit1	bit2	bit3	bit4	bit5	bit6
	current	Volt.	OL	SYS	FBK	EXI	CE
0: No fault record							
1: Over-current during acceleration (ocA)	●						
2: Over-current during deceleration (ocd)	●						
3: Over-current during steady operation (ocn)	●						
4: Ground fault (GFF)	●						
6: Over-current at stop (ocS)	●						
7: Over-voltage during acceleration (ovA)		●					
8: Over-voltage during deceleration (ovd)		●					
9: Over-voltage during constant speed (ovn)		●					
10: Over-voltage at stop (ovS)		●					
11: Low-voltage during acceleration (LvA)		●					
12: Low-voltage during deceleration (Lvd)		●					
13: Low-voltage at constant speed (Lvn)		●					
14: Low-voltage at stop (LvS)		●					
15: Phase loss protection (orP)		●					
16: IGBT overheating (oH1)			●				
17: Heatsink overheating (oH2)			●				
18: IGBT temperature detection failure (tH1o)			●				

Fault Code	bit0	bit1	bit2	bit3	bit4	bit5	bit6
	current	Volt.	OL	SYS	FBK	EXI	CE
19: Capacitor hardware error (tH2o)			●				
21: Over load (oL)			●				
22: Electronics thermal relay 1 protection (EoL1)			●				
23: Electronics thermal relay 2 protection (EoL2)			●				
24: Motor overheating PTC-130 / KTY-84-130 (oH3)			●				
26: Over torque 1 (ot1)			●				
28: Under current (uC)	●						
31: EEPROM read error (cF2)				●			
33: U-phase error (cd1)				●			
34: V-phase error (cd2)				●			
35: W-phase error (cd3)				●			
36: cc hardware error (Hd0)				●			
37: oc hardware error (Hd1)				●			
40: Auto-tuning error (AUE)				●			
41: PID loss ACI (AFE)					●		
48: ACI loss (ACE)					●		
49: External fault (EF)						●	
51: External base block (bb)						●	
52: Password is locked (Pcod)				●			
54: Illegal command (CE1)							●
55: Illegal data address (CE2)							●
56: Illegal data value (CE3)							●
57: Data is written to read-only address (CE4)							●
58: Modbus transmission time-out (CE10)							●
79: U-phase over-current before run (Aoc)	●						
80: V-phase over-current before run (boc)	●						
81: W-phase over-current before run (coc)	●						
82: U-phase output phase loss (OPL1)	●						
83: V-phase output phase loss (OPL2)	●						
84: W-phase output phase loss (OPL3)	●						
87: Low frequency overload protection (oL3)			●				
89: Rotor position detection error (RoPd)					●		
90: Force to stop (FStp)				●			
98: Fire mode output (Fire)				●			
140: oc hardware error (Hd6)				●			
141: GFF occurs before run (b4GFF)				●			
142: Auto-tune error 1 (AuE1) (DC test stage)				●			
143: Auto-tune error 2 (AuE2) (high frequency stall stage)				●			
144: Auto-tune error 3 (AuE3) (rotation test stage)				●			

Fault Code	bit0	bit1	bit2	bit3	bit4	bit5	bit6
	current	Volt.	OL	SYS	FBK	EXI	CE
221: High water pressure (HPS)				●			
222: Low water pressure (LPS)				●			
223: Dry pump (dryE)				●			
224: Water leaking (pipe explosion) (LEKE)				●			
225: Clogged pipe (JAME)				●			
226: RTC error (rtF)				●			
227: Dry pump curve auto-measuring (dAUE)				●			

06-29 PTC-130 / KTY84-130 Action

Default: 0

Settings 0: Warn and continue operation
1: Fault and ramp to stop
2: Fault and coast to stop
3: No warning

- MSI motor has two kinds of built-in PTC-130 and KTY84-130 thermistors.
- Refer to section 4-3 for the installation of motor and drive.
- Set the operation mode of a drive after you set Pr.06-29 to define PTC-130 / KTY84-130 detection.
- Running the motor at low frequency for a long time reduces the cooling function of the motor fan. To prevent overheating, use a Positive Temperature Coefficient thermistor on the motor, and connect the thermistor output signal to the drive's analog input terminals.

06-30 PTC-130 / KTY84-130 Level

Default: 50.0

Settings 0.0–100.0%

- MSI motor has two kinds of built-in PTC-130 and KTY84-130 thermistors.
- Set AI1 / AI2 analog input function Pr.03-00 to 6 [Positive temperature coefficient (PTC-130 / KTY84-130) thermistor input value].
- Use this to set the PTC-130 / KTY84-130) level; the corresponding value for 100% is the analog input maximum value.
- When using the AI1 terminal:
  1. You must set Pr.03-28 to 1 and switch AI1 voltage to 0–10 V. At this time, the AVI input impedance is 20 KΩ.
  2. If the temperature reaches to the set protection level, the motor acts according to the settings for Pr.06-29 and displays warning "oH3" (if Pr.06-29 = 1–3). When the temperature is lower than the set protection level, you can press RESET key to clear the fault.
  3. The PTC uses the AVI-input and is connected via resistor-divider as shown below:
     (1) The voltage between +10V to ACM: lies within 10–11.2 V.
     (2) The impedance for AI1 is around 20 KΩ. The recommended value for resistor-divider is 1K–10 KΩ.
     (3) Contact your motor dealer for the curve of temperature and resistance value for PTC. Protection level (Pr.06-30) = V+10 *(RPTC//20K)/[R1+(RPTC//20K)]

- V+10: voltage between +10V-ACM actual value
- RPTC: motor PTC overheat protection level
- 20 KΩ: is AVI input impedance
- R1: PTC-130 resistor-divider (recommended value: 1–10kΩ); KTY84-130 resistor-divider connects to 2 kΩ

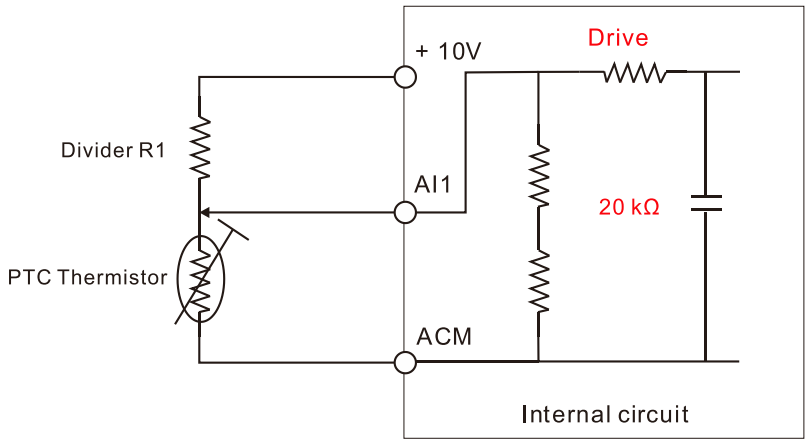

Take the standard PTC-130 thermistor as example:
if protection level is 4000 Ω, the voltage between +10V-ACM is 10.5V and resistor-divider R1 is 4.4 kΩ.

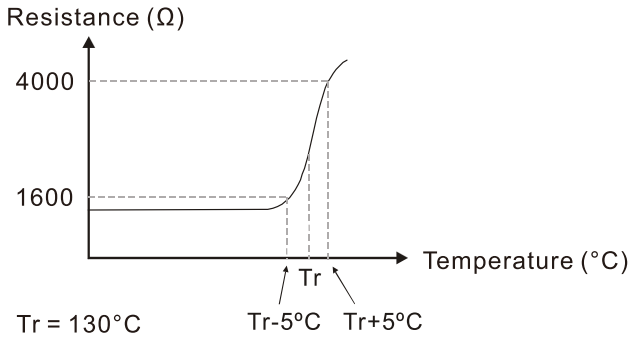

Refer to the following calculation when Pr.06-30 is set to 45% and motor temperature overheating protection level is 4000 Ω:

4000//20000= (4000 × 20000) ÷ (4000+20000) = 3333.33 Ω

10.5 × 3333.33 ÷ (4400 + 3333.33) = 4.52 (V) ≒ 4.5 (V)

Pr.06-30 should be set to 4.5 ÷ 10V x 100% = 45%

06-31 Frequency Command at Malfunction

Default: Read only

Display 0.00–599.00 Hz

When a malfunction occurs, check the current Frequency command. If the error happens again, this parameter overwrites the previous record.

06-32 Output Frequency at Malfunction

Default: Read only

Display 0.00–599.00 Hz

When an error occurs, you can check the output frequency for the malfunction. If the error happens again, this parameter overwrites the previous record.

06-33 Output Voltage at Malfunction

Default: Read only

Display 0.0–6553.5 V

📖 When a malfunction occurs, check the current output voltage. If the error happens again, this parameter overwrites the previous record.

06-34 DC bus Voltage at Malfunction

Default: Read only

Display 0.0–6553.5 V

📖 When an error occurs, you can check the DC bus voltage for the malfunction. If the error happens again, this parameter overwrites the previous record.

06-35 Output Current at Malfunction

Default: Read only

Display 0.00–655.35 Amps

📖 When an error occurs, you can check the output current for the malfunction. If the error happens again, this parameter overwrites the previous record.

06-36 IGBT Temperature at Malfunction

Default: Read only

Display 0.0–6553.5ºC

📖 When an error occurs, you can check the IGBT temperature for the malfunction. If the error happens again, this parameter overwrites the previous record.

06-38 Motor Speed at Malfunction

Default: Read only

Display 0.0–65535 rpm

📖 When a malfunction occurs, check the current motor speed in rpm. If the error happens again, this parameter overwrites the previous record.

06-39 Torque Command at Malfunction

Default: Read only

Display -32768–32767

📖 When a malfunction occurs, check the current torque command. If the error happens again, this parameter overwrites the previous record.

06-40 Status of the Multi-function Input Terminal at Malfunction
06-41 Status of the Multi-function Output Terminal at Malfunction

Default: Read only

Display 0000h–FFFFh

📖 When a malfunction occurs, check the current status of the multi-function input/output terminals. If the error happens again, this parameter overwrites the previous record.

06-42 Drive Status at Malfunction

Default: Read only

Display 0000h–FFFFh

When a malfunction occurs, check the current drive status (communication address 2101H). If the error happens again, this parameter overwrites the previous record.

06-45 Output Phase Loss Detection Action (OPHL)

Default: 3

Settings 0: Warn and continue operation
1: Fault and ramp to stop
2: Fault and coast to stop
3: No warning

Pr.06-45 = 0: When phase loss protection is triggered, the keypad displays OPL1 (U-phase output phase loss), OL2 (U-phase output phase loss), OPL3 (W-phase output phase loss).

Pr.06-45 = 1, 2: When phase loss protection is triggered, the keypad displays OPHL.

06-46 Detection Time for Output Phase Loss

Default: 0.500

Settings 0.000–65.535 sec.

06-47 Current Detection Level for Output Phase Loss

Default: 1.00

Settings 0.00–100.00%

06-48 DC Brake Time for Output Phase Loss

Default: 0.000

Settings 0.000–65.535 sec.

The base of Pr.06-47 is rated current (Pr.00-01).

Pr.06-48 = 0 disables the OPHL detection function.

Example:

If the rated current = 10A, Pr.06-47 = 1%, Pr.06-48 = 3 seconds, then triggers phase loss protection when the output current is lower 10A x 1% =1A and continues for 3 seconds.

The output phase loss detection has several statuses are as follows:

- Status 1: The drive is in operation

  When any phase is less than the Pr.06-47 setting, and exceeds the Pr.06-46 setting time, the drive executes according to the Pr.06-45 setting.

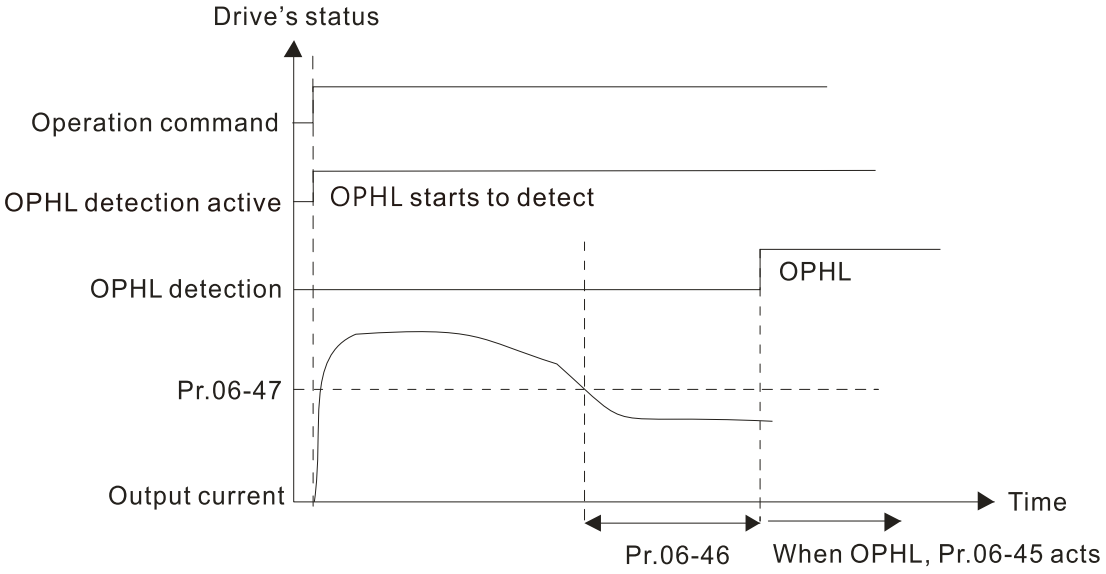

- Status 2: The drive is in STOP; Pr.06-48 ≠ 0; Pr.07-02 ≠ 0

  When the drive starts, it executes Pr.06-48 first, and then executes Pr.07-02 (DC brake). The DC brake current level in this state includes two parts: one is 20 times the Pr.06-47 setting value in Pr.06-48 setting time; the other is the Pr.07-01 setting value in Pr.07-02 setting time. The total DC brake time T = Pr.06-48 + Pr.07-02.

  Status 2-1: Pr.06-48 ≠ 0, Pr.07-02 ≠ 0 (No OPHL detected before the operation)

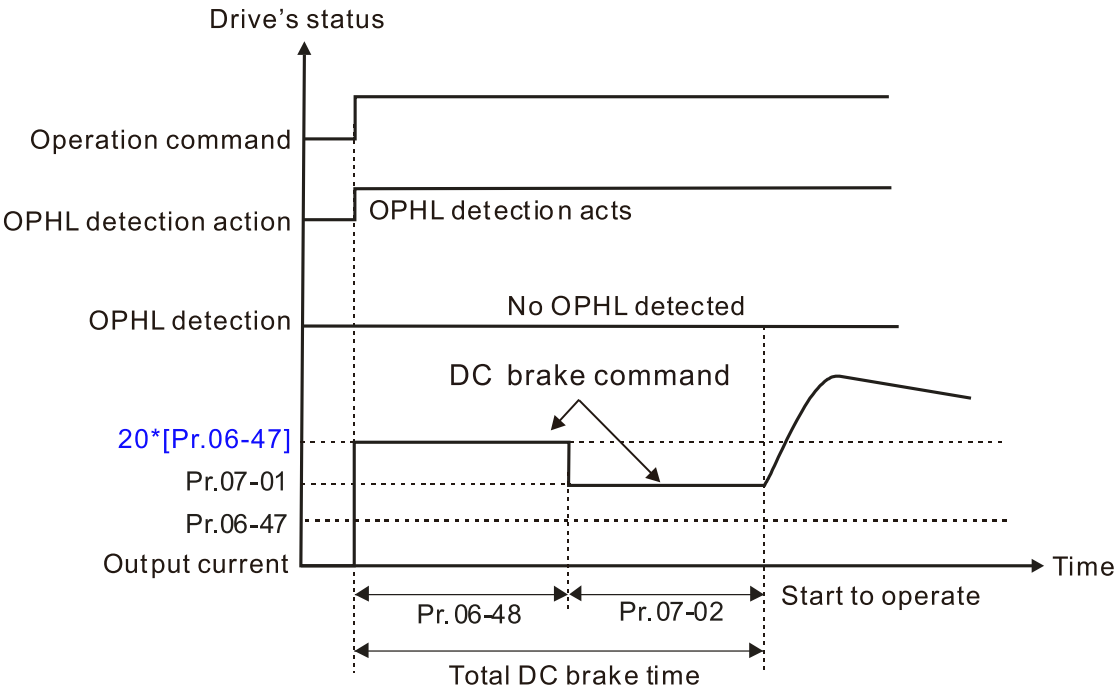

Status 2-2: Pr.06-48 ≠ 0, Pr.07-02 ≠ 0 (OPHL detected before the operation)

In this period, if an OPHL happens within the time for Pr.06-48, the drive executes the Pr.06-45 setting after the drive starts counting for half the time of Pr.06-48.

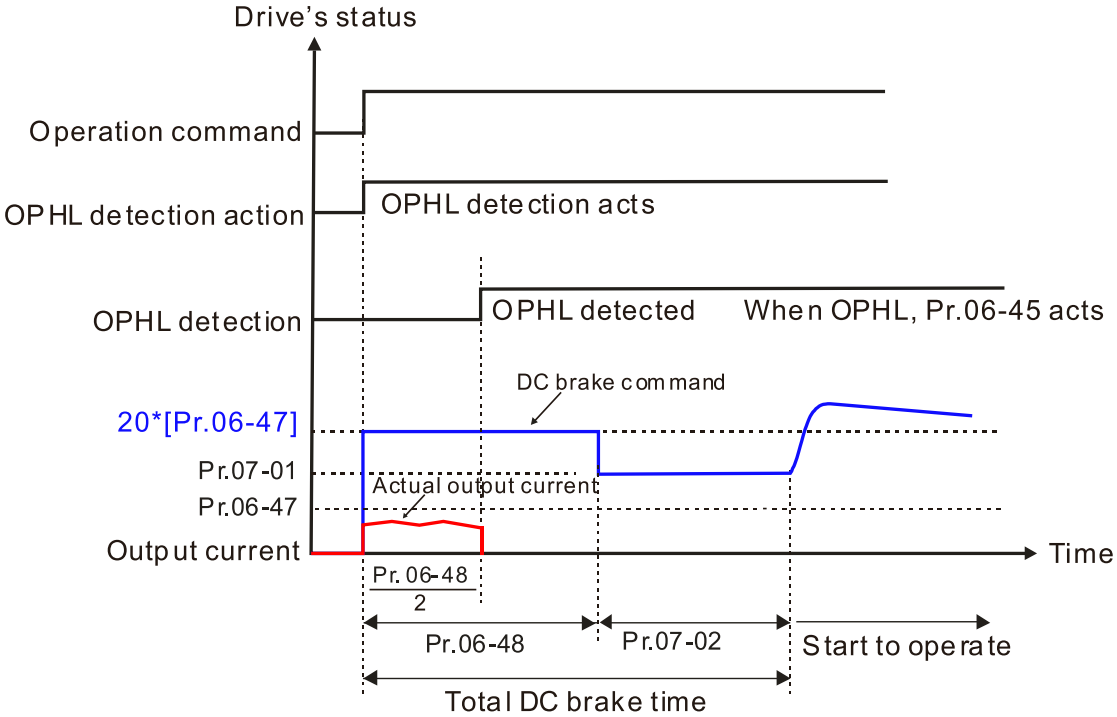

- Status 3: The drive is in STOP; Pr.06-48 ≠ 0; Pr.07-02 = 0

  When the drive starts, it executes Pr.06-48 as the DC brake. The DC brake current level is 20 times the Pr.06-47 setting value.

  Status 3-1: Pr.06-48 ≠ 0, Pr.07-02 = 0 (No OPHL detected before the operation)

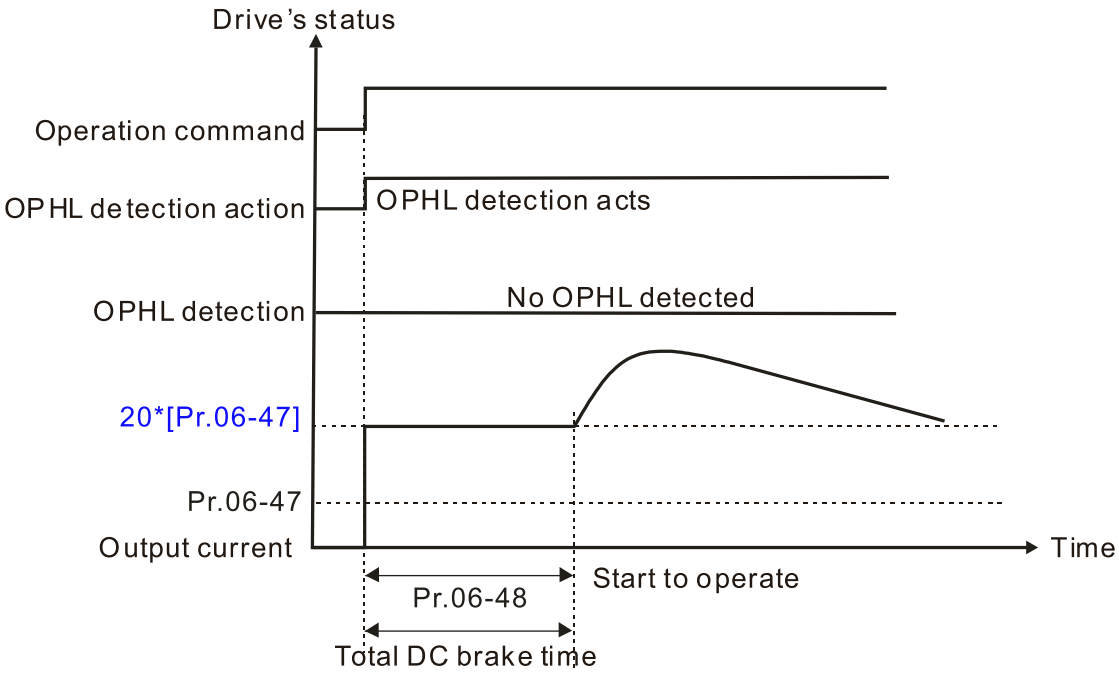

Status 3-2: Pr.06-48 ≠ 0, Pr.07-02 = 0 (OPHL detected before the operation)

In this period, if an OPHL happens within the time for Pr.06-48, the drive executes the Pr.06-45 setting after the drive starts counting for half the time of Pr.06-48.

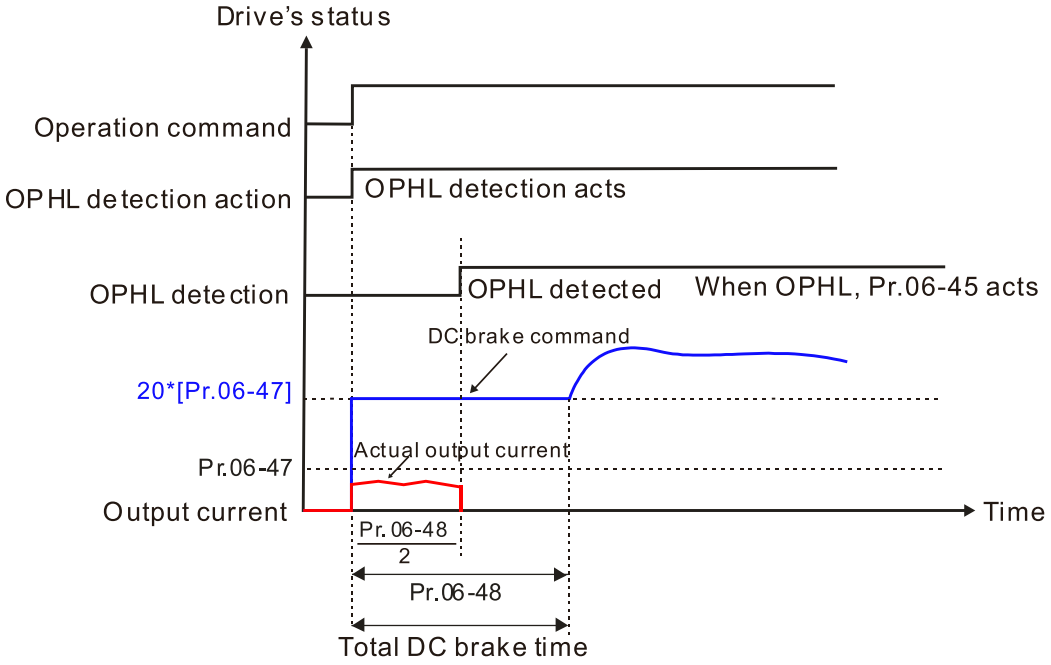

06-49 LvX Auto-reset

Default: 0

Settings 0: Disabled

1: Enabled

06-53 Input Phase Loss Detection Action (OrP)

Default: 0

Settings 0: Fault and ramp to stop

1: Fault and coast to stop

The drive executes the input phase loss protection according to Pr.06-53.

06-55 Derating Protection

Default: 0

Settings 0: Constant rated current and limit carrier frequency by load current and temperature

1: Constant carrier frequency and limit load current by setting carrier frequency

2: Constant rated current (same as setting 0), but close current limit

Refer to section 9-4-2 for the carrier frequency of derating.

Setting 0:

When the operating point is greater than the derating curve (when the operating carrier wave is greater than the rated carrier wave), the rated current is constant, and carrier frequency (Fc) output by the drive decreases automatically according to the ambient temperature, overload output current and overload time. If overloads are not frequent, and the concern is only about the carrier frequency operating with the rated current for a long time, and changes to the carrier wave

due to short overload are acceptable, set to 0.

Take VFD8A5MP43JNNAA for example:

Ambient temperature 40°C, 100% duty, and independent installation. When the carrier frequency is set to 8 kHz, it corresponds to 85% of the rated output current. When the output current is higher than this value, it automatically decreases the carrier wave according to the ambient temperature, output current and overload time. At this time, the overload capacity of the drive is still 150% of the rated current.

- Setting 1:

  When the operating point exceeds the derating curve 1, the carrier frequency is the setting value. Select this mode if the change of carrier wave and motor noise caused by ambient temperature and frequent overload are not acceptable. Refer to Pr.00-17.

  Take VFD8A5MP43JNNAA for example:

  When the carrier frequency is to be maintained at 8 kHz, the rated current decreases to 85%. The OL protection executes when the current is 120% x 85% = 102% for one minute; therefore, it must operate by the curve to keep the carrier frequency.

- Setting 2:

  The protection method and action are the same as setting it to 0, but this disables the current limit when output current is the derating ratio ×120% (default value). The advantage is that it provides a higher starting output current when the carrier frequency setting is higher than the default. However, the carrier frequency derates easily when it overloads.

  Example:

  When Pr.06-55 = 0 or 1, over-current stall prevention level = ratio x Pr.06-03. When Pr.06-55 = 2, the over-current stall prevention level = Pr.06-03.

- Use this parameter with Pr.00-16 and Pr.00-17.
- The ambient temperature also affects the derating; refer to section 9-4-1 for ambient temperature derating curve.

  Take VFD8A5MP43JNNAA for example:

  Ambient temperature 40ºC, and independent installation. When the carrier frequency is set to 8 kHz, it corresponds to 85% of the rated output current. The ambient temperature 50ºC corresponds to 75% x 75% of the rated output current.

06-60 Software Detection GFF Current Level

Default: 60.0

Settings 0.0–6553.5%

06-61 Software Detection GFF Filter Time

Default: 0.10

Settings 0.00–655.35 sec.

- When the drive detects that the unbalanced three-phase output current is higher than the setting for Pr.06-60, GFF protection activates. The drive then stops output.

06-63 Operation Time of Fault Record 1 (Day)

06-65 Operation Time of Fault Record 2 (Day)

06-67	Operation Time of Fault Record 3 (Day)
06-69	Operation Time of Fault Record 4 (Day)
06-90	Operation Time of Fault Record 5 (Day)
06-92	Operation Time of Fault Record 6 (Day)

Default: Read only

Display 0–65535 days

06-64	Operation Time of Fault Record 1 (Min.)
06-66	Operation Time of Fault Record 2 (Min.)
06-68	Operation Time of Fault Record 3 (Min.)
06-70	Operation Time of Fault Record 4 (Min.)
06-91	Operation Time of Fault Record 5 (Min.)
06-93	Operation Time of Fault Record 6 (Min.)

Default: Read only

Display 0–1439 min.

🕮 If there is any malfunction when the drive operates, Pr.06-17–06-22 records the malfunctions, and Pr.06-63–06-70 records the operation time for four sequential malfunctions. Check if there is any problem with the drive according to the interval of the recorded fault.

🕮 Example:

The first error: ocA occurs after motor drive operates for 1000 minutes.
The second error: ocd occurs after another 1000 minutes.
The third error: ocn occurs after another 1000 minutes.
The fourth error: ocA occurs after another 1000 minutes.
The fifth error: ocd occurs after another 1000 minutes.
The sixth error: ocn occurs after another 1000 minutes.
Then Pr.06-17–06-22 and Pr.06-63–06-70 are recorded as follows:

Parameter	1st fault	2nd fault	3rd fault	4th fault	5th fault	6th fault
06-17	ocA	ocd	ocn	ocA	ocd	ocn
06-18	0	ocA	ocd	ocn	ocA	ocd
06-19	0	0	ocA	ocd	ocn	ocA
06-20	0	0	0	ocA	ocd	ocn
06-21	0	0	0	0	ocA	ocd
06-22	0	0	0	0	0	ocA
06-63	1000	560	120	1120	680	240
06-64	0	1	2	2	3	4
06-65	0	1000	560	120	1120	680
06-66	0	0	1	2	2	3
06-67	0	0	1000	560	120	1120
06-68	0	0	0	1	2	2
06-69	0	0	0	1000	560	120
06-70	0	0	0	0	1	2

NOTE: By examining the time record, you can see that that the last fault (Pr.06-17) happened after the drive ran for 4 days and 240 minutes.

06-71 Low Current Setting Level

Default: 0.0

Settings 0.0–100.0%

06-72 Low Current Detection Time

Default: 0.00

Settings 0.00–360.00 sec.

06-73 Low Current Action

Default: 0

Settings 0: No function
1: Fault and coast to stop
2: Fault and ramp to stop by the 2nd deceleration time
3: Warn and continue operation

- The drive operates according to the setting for Pr.06-73 when the output current is lower than the setting for Pr.06-71 and when the time of the low current exceeds the detection time for Pr.06-72. Use this parameter with the external multi-function output terminal 44 (for low current output).
- The low current detection function does not execute when drive is in sleep or standby status.

06-80 Fire Mode

Default: 0

Settings 0: Disabled
1: Forward operation (counterclockwise)
2: Reverse operation (clockwise)

- Use this parameter with multi-function input terminal setting 58 or 59, and multi-function output terminal setting 53.
  0: Fire detection is invalid.
  1: The motor operates in a counterclockwise direction (U, V, W).
  2: The motor operates in a clockwise direction (U, W, V).

06-81 Operating Frequency in Fire Mode

Default: 150.00

Settings 0.00–180.00 Hz

06-86 PTC Type

Default: 0

Settings 0: PTC-130
1: KTY84-130

- When using KTY84-130, users have to select the fixed resistor-divider 2 kΩ (the power cannot smaller than 1/4W) ± 0.1%
- The thermistor and the corresponding resistor-divider are as shown below:

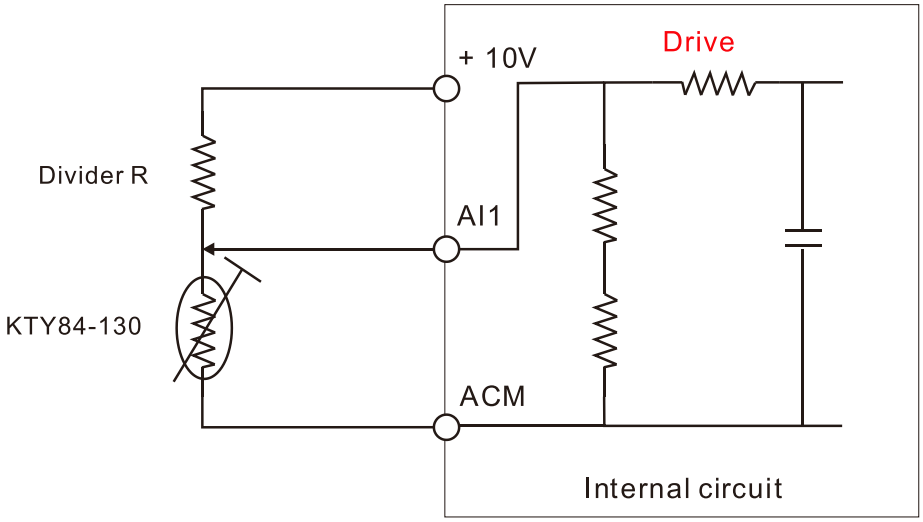

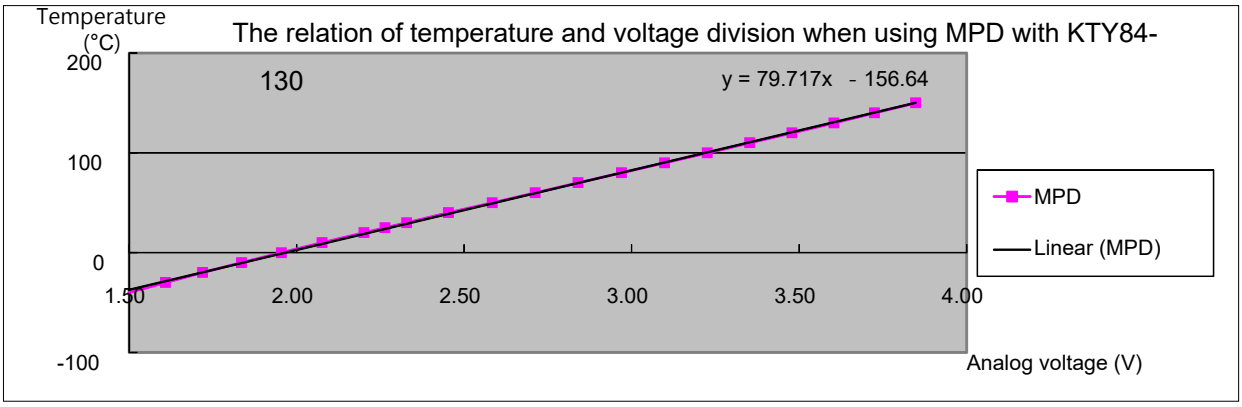

- The drive occurs oH3 fault when the value is over the setting level. When the temperature is lower than the trigger level -5ºC, oH3 fault can be cleared.
- If the drive does not connect to KTY84-130 or KTY84-130 is broken and the temperature is not within -40~150ºC, then the temperature can only display the upper limit or lower limit, and does not display any information about the fault. The drive still displays oH3 fault, then check if KTY84-130 is installed correctly.
- If a warning occurs during the temperature detection of KTY84-130, acts according to the setting of Pr.06-29.

06-88 Operation Times in Fire Mode

Default: Read only

Settings 0–65535 times

- After triggering fire mode by setting Mix =58, 59, the drive outputs frequency according to Pr.06-81 setting. Pr.06-88 accumulates every time the drive operates.
- if fire mode runs less than 4 minutes, MIx cancels the trigger of fire mode, and returns to the normal state; if fire mode runs over 4 minutes, MIx cancels the trigger of fire mode, and returns to the normal state after running at least 2.5 hours.
- The keypad displays Fire when the fire mode is triggered.

07 Special Parameters

You can set this parameter during operation.

07-01 DC Brake Current Level

Default: 0

Settings 0–100%

Sets the level of the DC brake current output to the motor at start-up and stop. When setting the DC brake current, the rated current is 100%. It is recommended that you start with a low DC brake current level and then increase until you reach the proper holding torque. However, the DC brake current cannot exceed the motor's rated current to prevent the motor from burnout. Therefore, DO NOT use the DC brake for mechanical retention, otherwise injury or accident may occur.

07-02 DC Brake Time At Start-up

Default: 0.0

Settings 0.0–60.0 sec.

The motor may continue rotating due to external forces or the inertia of the motor itself. If you use the drive with the motor rotating, it may cause motor damage or trigger drive protection due to over-current. This parameter outputs DC current, generating torque to force the motor stop to get a stable start before motor operation. This parameter determines the duration of the DC brake current output to the motor when the drive starts up. Set this parameter to 0.0 to disable the DC brake at start-up.

07-03 DC Brake Time At STOP

Default: 0.0

Settings 0.0–60.0 sec.

The motor may continue rotating after the drive stops output due to external forces or the inertia of the motor itself. This parameter outputs DC current, generating torque to force the motor stop after the drive stops output to make sure that the motor stops.

This parameter determines the duration of the DC Brake current output to the motor when braking. To enable the DC brake at STOP, you must set Pr.00-22 (Stop Method) to 0 (ramp to stop). Set this parameter to 0.0 to disable the DC brake at stop.

Related parameters: Pr.00-22 Stop Method, Pr.07-04 DC Brake Frequency at STOP.

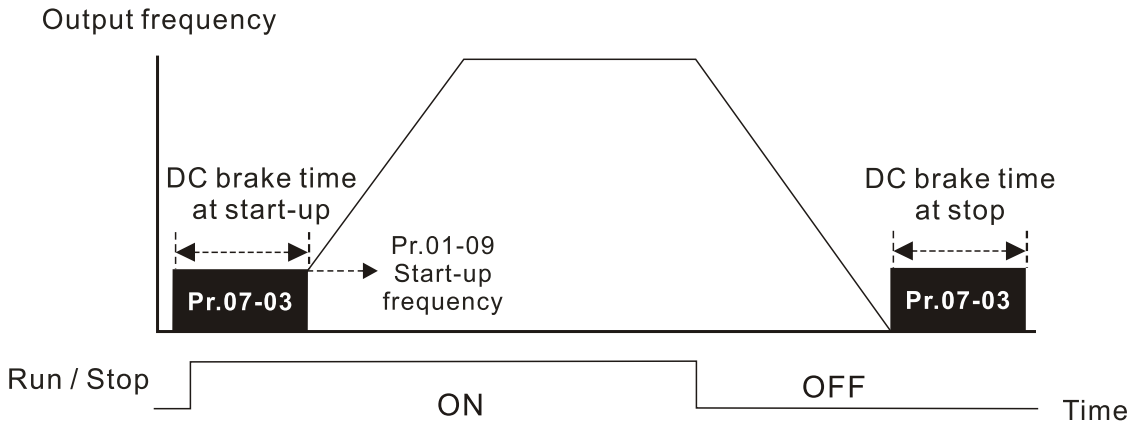

DC Brake Output Timing Diagram

07-05 Voltage Increasing Gain

Default: 100

Settings 1–200%

When using speed tracking, adjust Pr.07-05 to slow down the increasing voltage gain if there are errors such as oL or oc; however, the speed tracking time will be longer.

07-06 Restart After Momentary Power Loss

Default: 0

Settings 0: Stop operation
1: Speed tracking by the speed before the power loss

Determines the operation mode when the drive restarts from a momentary power loss.

The power system connected to the drive may power off momentarily for many reasons. This function allows the drive to keep outputting voltages after the drive is re-powered and does not cause the drive to stop.

1: Frequency tracking begins before momentary power loss and accelerates to the master Frequency command after the drive output frequency and motor rotator speed are synchronous. Use this setting when there is a lot of inertia with little resistance on the motor load. For example, in equipment with a large inertia flywheel, there is NO need to wait until the flywheel stops completely after a restart to execute the operation command; therefore, it saves time.

07-07 Allowed Power Loss Duration

Default: 2.0

Settings 0.0–20.0 sec.

Determines the maximum time of allowable power loss. If the duration of a power loss exceeds this parameter setting, the AC motor drive stops output after the power recovers.

Pr.07-06 is valid when the AC motor drive displays “Lv” during the maximum allowable power loss time. If the AC motor drive powers off due to overload which even does not exceed the allowed power loss duration, Pr.07-06 is invalid after the power recovers.

07-08 Base Block Time

Default: 0.5

Settings 0.1–5.0 sec.

When momentary power loss is detected, the AC motor drive blocks its output and then waits for a specified period of time (determined by Pr.07-08, called Base Block Time) before resuming operation. Set this parameter to the time that allows the residual voltage at the output side to decrease to 0 V before activating the drive again.

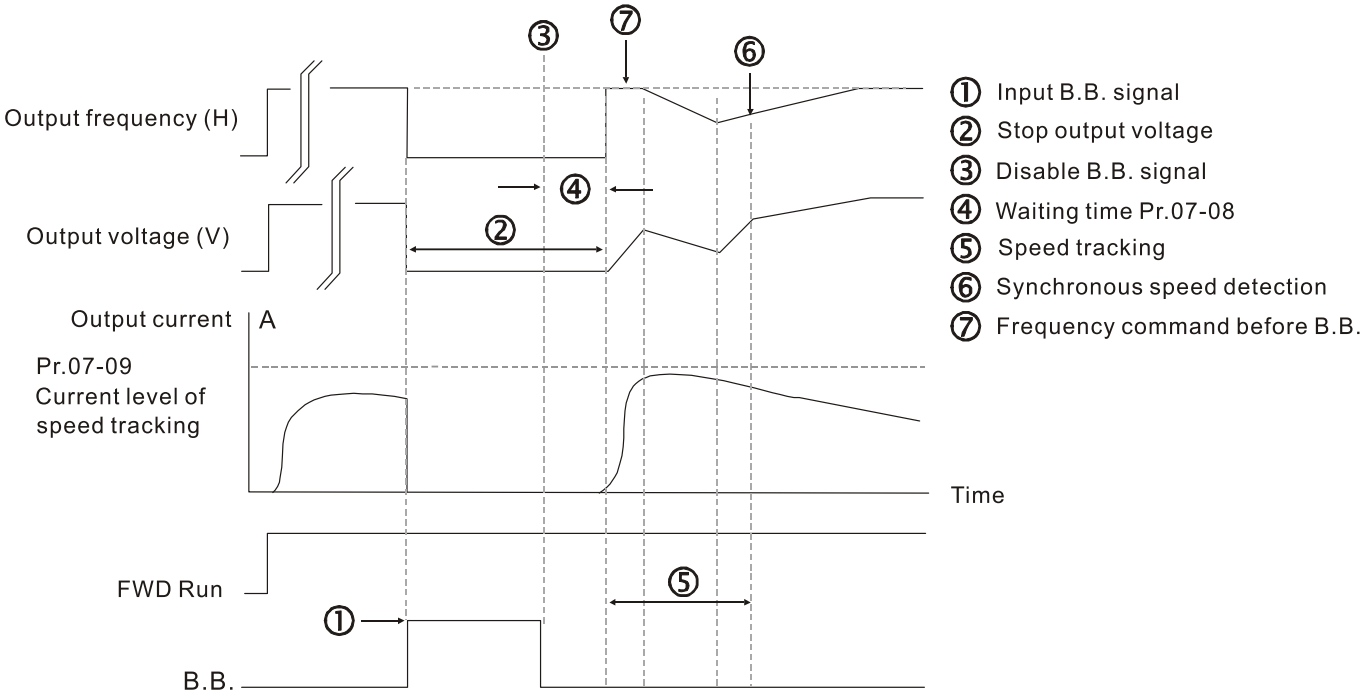

B.B. Speed tracking: from last output frequency

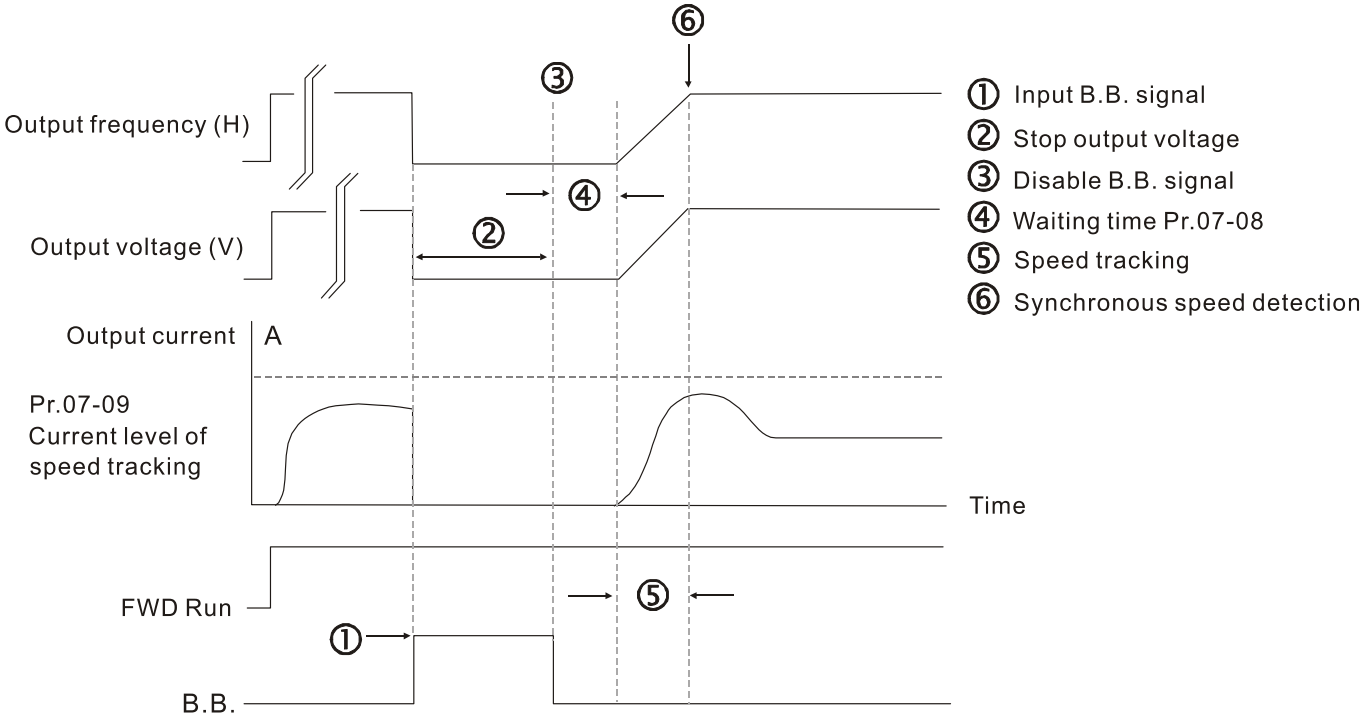

B.B. Speed tracking: from minimum output frequency

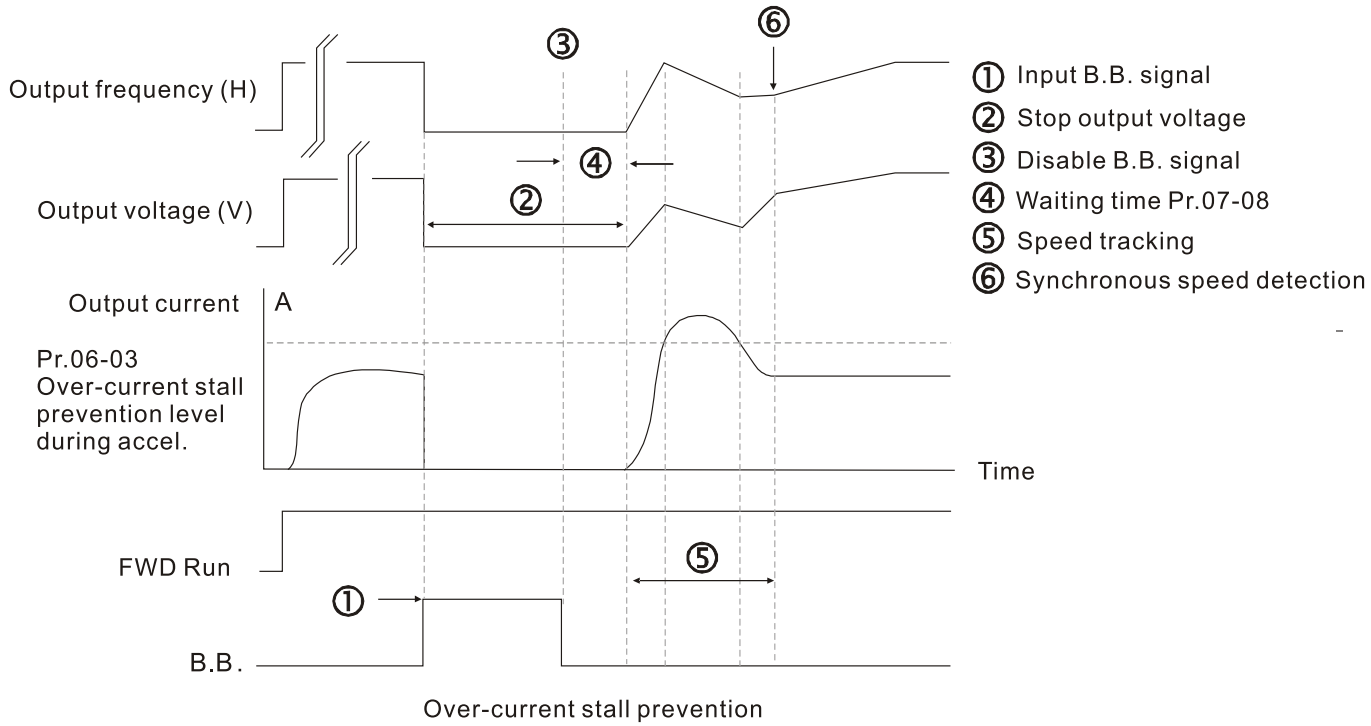

07-09 Current Limit of Speed Tracking

Default: 100

Settings 20–200%

- The AC motor drive executes speed tracking only when the output current is greater than the value set in Pr.07-09.
- The maximum current for speed tracking affects the synchronous time. The larger the parameter setting, the faster the synchronization occurs. However, if the parameter setting is too large, the overload protection function may be activated.

07-10 Restart after Fault Action

Default: 0

Settings 0: Stop operation
1: Speed tracking by current speed

- As long as Pr.07-10 is set to 1, the drive will track the speed automatically according to the current speed.
- Faults include: bb, oc, ov, occ. To restart after oc, ov, occ, you can NOT set Pr.07-11 to 0.

07-11 Number of Times of Restart After Fault

Default: 0

Settings 0–10

- After fault (allowed fault: oc, ov, occ) occurs, the AC motor drive can reset and restart automatically up to 10 times. If Pr.07-11 is set to 0, the drive does not reset or restart automatically after faults occur. The drive starts according to the Pr.07-10 setting after restarting after fault.
- If the number of faults exceeds the Pr.07-11 setting, the drive does not reset and restart until you press “RESET” manually and execute the operation command again.

07-12 Speed Tracking During Start-up

Default: 0

Settings
0: No function
1: Speed tracking by the maximum output frequency
2: Speed tracking by the current frequency command at start-up
3: Speed tracking by the minimum output frequency

- Speed tracking is suitable for punch, fans and other large inertia loads. For example, a mechanical punch usually has a large inertia flywheel, and the general stop method is coast to stop. If it needs to be restarted again, the flywheel may take 2–5 minutes or longer to stop. This parameter setting allows you to start the flywheel operating again without waiting until the flywheel stops completely.
- In PMSVC control mode, the AC motor drive executes the speed tracking function automatically according to the current speed of motor when this setting is NOT 0.

07-19 Fan Cooling Control

Default: 3

Settings
0: Fan is always ON
1: Fan is OFF after the AC motor drive stops for one minute.
2: Fan is ON when the AC motor drive runs; fan is OFF when the AC motor drive stops
3: Fan turns ON when temperature (IGBT) reaches around 60°C.

- Use this parameter to control the fan.
- 0: Fan runs immediately when the drive power is turned ON.
- 1: Fan runs when the AC motor drive runs. One minute after the AC motor drive stops, the fan is OFF.
- 2: Fan runs when the AC motor drive runs and stops immediately when AC motor drive stops.
- 3: Fan is ON when IGBT or capacitance temperature is > 60°C; Fan is OFF when IGBT and capacitance temperature are both < 40°C, and the drive stops running.

07-20 Emergency Stop (EF) & Force to Stop Selection

Default: 0

Settings
0: Coast to stop
1: Stop by the first deceleration time
2: Stop by the second deceleration time
3: Stop by the third deceleration time
4: Stop by the fourth deceleration time
5: System deceleration
6: Automatic deceleration

- When the multi-function input terminal setting is set to 10 (EF input) or 18 (force to stop) and the terminal contact is ON, the drive stops according to the setting of this parameter.

07-21 Automatic Energy Saving (AES) Setting

Default: 0

Settings 0: Disabled

1: AES optimization (for VF, SVC control modes)

Different control modes for Pr.07-21:

Setting value / Control Mode	Induction Motor (IM)		Permanent Magnet Synchronous Motor (PM)		Synchronous Reluctance Motor (SynRM)
	VF	SVC	PMSVC	PMFOC	FOC
1: AES optimization	✓	✓			

AES optimization (Pr.07-21 = 1):

- Controls the output voltage to minimize the motor's losses for optimal energy-saving. The motor's losses are calculated by motor parameter auto-tuning and energy-saving coefficient.
- Automatic energy-saving optimization control is according to the block diagram below:

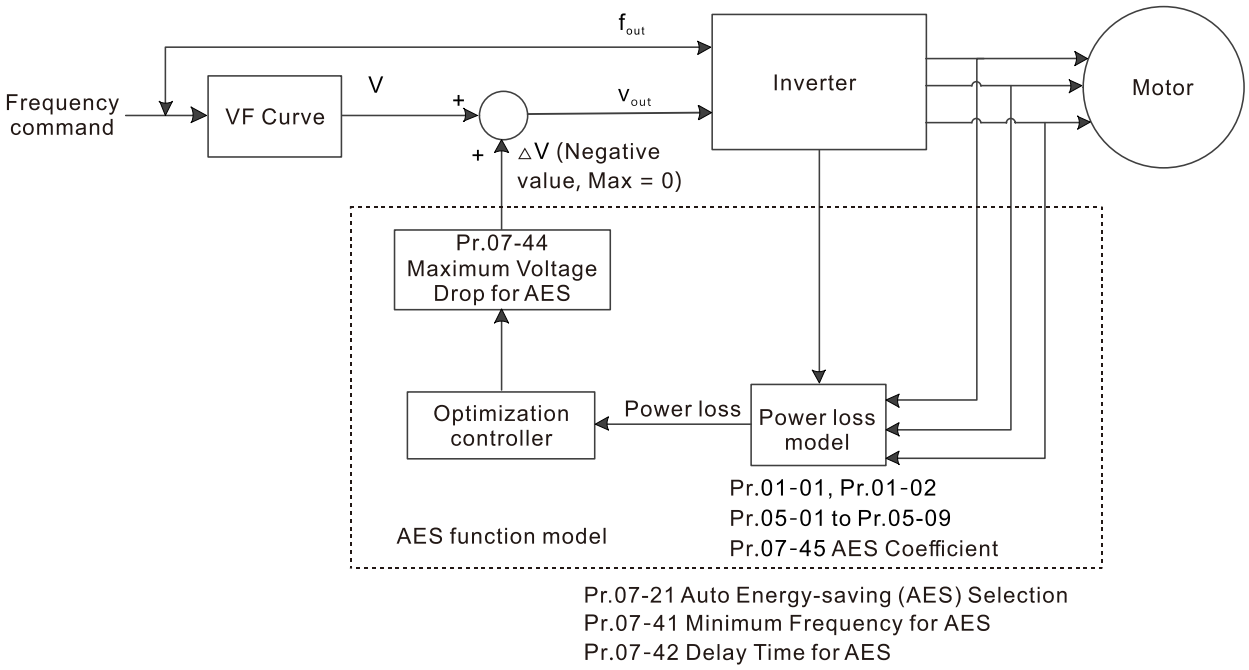

- The prerequisites for valid AES optimization (Pr.07-21 = 2) are:
  A. Output frequency is larger than Pr.07-41 (Minimum Frequency for AES)
  B. The drive is in a steady-state output frequency status.
  C. Time for steady-state output frequency is larger than Pr.07-42 (Delay Time for AES)
- The prerequisites for invalid AES optimization (Pr.07-21 = 2) are:
  1. A changing output frequency
  2. The loss model automatically determines the voltage drops when the drive is in normal and heavy duty. If there is no more voltage that can be adjusted, that is, the voltage drop is already optimized, AES is invalid.

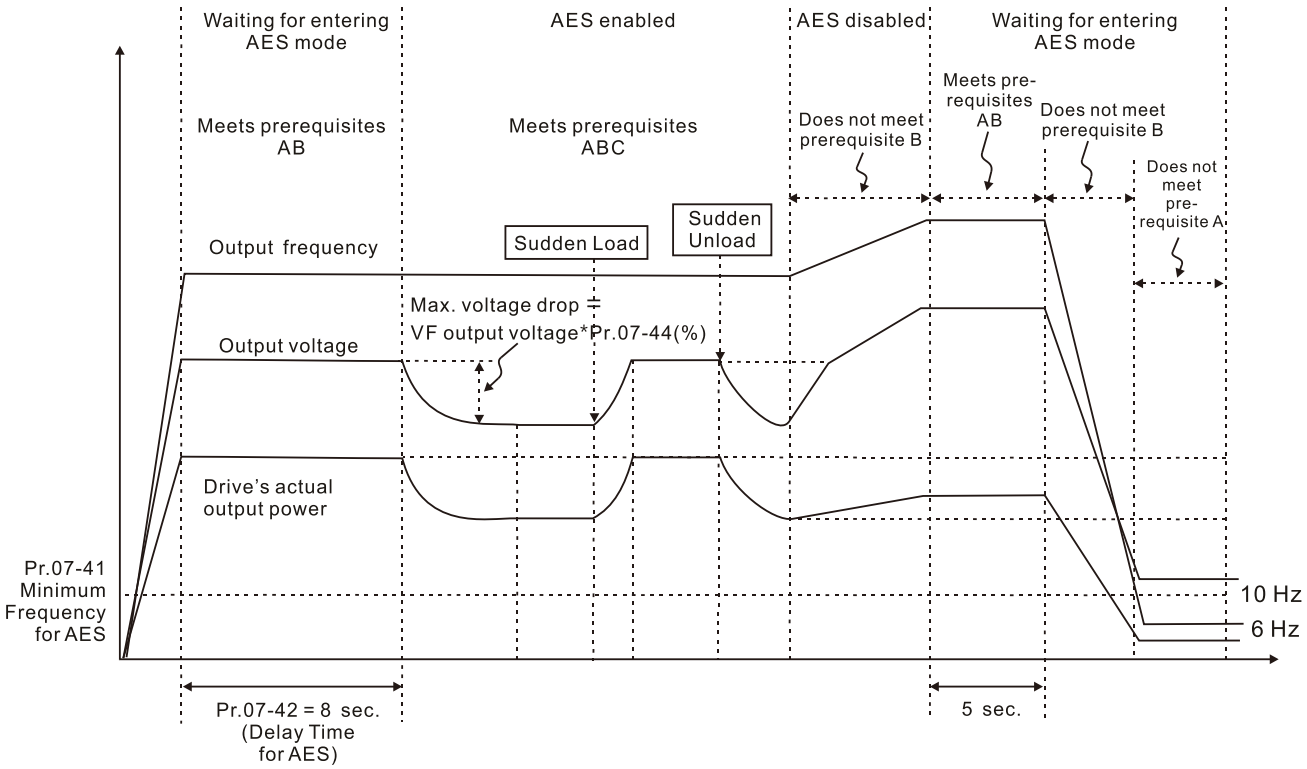

📖 The energy-saving function is invalid during the drive's acceleration and deceleration. To make it valid, the prerequisites need to be verified again.

07-23 Automatic Voltage Regulation (AVR) Function

Default: 0

Settings 0: Enable AVR
1: Disable AVR
2: Disable AVR during deceleration

📖 The rated voltage of a 220V motor is usually 200 VAC, 60 Hz / 50 Hz, and the input voltage of the AC motor drive may vary from 180–264 VAC, 50 Hz / 60 Hz. Therefore, when the AC motor drive is used without the AVR function, the output voltage is the same as the input voltage. When the motor runs at the voltage exceeding 12–20% of the rated voltage, it causes higher temperatures, damaged insulation, and unstable torque output, which result in losses due to shorter motor lifetime.

📖 The AVR function automatically regulates the output voltage of the AC motor drive to the motor's rated voltage when the input voltage exceeds the motor's rated voltage. For example, if the V/F curve is set at 200 V_{AC}, 50 Hz and the input voltage is at 200–264 V_{AC}, then the drive automatically reduces the output voltage to the motor to a maximum of 200 V_{AC}, 50 Hz. If the input voltage is at 180–200 V_{AC}, the output voltage to motor is in direct proportion to the input voltage.

📖 0: When the AVR function is enabled, the drive calculates the output voltage according to the actual DC bus voltage. The output voltage does NOT change when the DC bus voltage changes.

📖 1: When the AVR function is disabled, the drive calculates the output voltage according to the actual DC bus voltage. The output voltage changes with the DC bus voltage, and may cause insufficient current, over-current or oscillation.

- 2: The drive disables the AVR function only during deceleration to stop, and at this time, you can accelerate the braking to achieve the same result.
- When the motor ramps to stop, disable the AVR function to shorten the deceleration time. Then, use with the auto-acceleration and auto-deceleration functions to make the motor's deceleration more stable and quicker.

07-24 Torque Command Filter Time

Default: 0.050

Settings 0.001–10.000 sec.

- When the time constant setting is too large, the control is stable but the control response is slow. When the time constant setting is too small, the control response is faster but the control may be unstable. For optimal setting, adjust the setting based on the control stability or the control response.

07-25 Slip Compensation Filter Time

Default: 0.100

Settings 0.001–10.000 sec.

- Change the compensation response time with Pr.07-24 and Pr.07-25.
- If you set Pr.07-24 and Pr.07-25 to 10 seconds, the compensation response time is the slowest; however, the system may be unstable if you set the time too short.

07-26 Torque Compensation Gain

Default: 1

Settings 0–5000

- When the compensation gain is set too high, it may cause motor over-flux and result in a too large output current of the drive, motor overheating or trigger the drive's protection function.
- This parameter affects the output current when the drive runs. The effect is smaller at the low-speed area.
- Set this parameter higher when the no-load current is too large. But the motor may vibrate if the setting is too high. If the motor vibrates when operating, reduce the setting.

07-27 Slip Compensation Gain

Default: 0.00
(Default value is 1.00 in SVC mode)

Settings 0.00–10.00

- The induction motor needs constant slip to produce electromagnetic torque. It can be ignored at higher motor speeds, such as rated speed or 2–3% of slip.
- However, during the drive operation, the slip and the synchronous frequency are in reverse proportion to produce the same electromagnetic torque. The slip is larger with the reduction of synchronous frequency. Moreover, the motor may stop when the synchronous frequency decreases to a specific value. Therefore, the slip seriously affects the motor speed accuracy at low speed.

- In another situation, when you use an induction motor with the drive, the slip increases when the load increases. It also affects the motor speed accuracy.
- Use this parameter to set the compensation frequency, and reduce the slip to maintain the synchronous speed when the motor runs at the rated current in order to improve the accuracy of the drive. When the drive output current is higher than Pr.05-05 (No-load Current for Induction Motor 1 (A)), the drive compensates the frequency according to this parameter.
- Apply the slip compensation after load and acceleration. Increase the compensation value from small to large gradually. If the actual speed ratio is slower than expected, increase the parameter setting value; otherwise, decrease the setting value. If the actual speed ratio is slower than expected, increase the parameter setting value; otherwise, decrease the setting value.

07-29 Slip Deviation Level

Default: 0

Settings 0.0–100.0%
0: No detection

07-30 Over-slip Deviation Detection Time

Default: 1.0

Settings 0.0–10.0 sec.

07-31 Over-Slip Deviation Treatment

Default: 0

Settings 0: Warn and continue operation
1: Fault and ramp to stop
2: Fault and coast to stop
3: No warning

- Pr.07-29 to Pr.07-31 set the allowable slip level / time and the over-slip treatment when the drive is running.

07-32 Motor Oscillation Compensation Factor

Default: 1000

Settings 0–10000

- If there are current wave motions which cause severe motor oscillation in some specific area, setting this parameter can effectively improve this situation.
- When the current wave motion occurs in low frequency and high power, increase the value for Pr.07-32.

07-33 Auto-restart Interval of Fault

Default: 60.0

Settings 0.0–6000.0

- When a reset / restart occurs after a fault, the drive uses Pr.07-33 as a timer and starts counting the number of faults within this time period. Within this period, if the number of faults does not exceed the setting for Pr.07-11, the counting clears and starts from 0 when the next fault occurs.

07-35 Status Record When the Drive Is Powered Off

Default: Read only

Settings 0–65535

Use this parameter with Pr.02-35 = 2. After powering on again, it will be confirmed whether Pr.07-35 is in the running state. The drive will be started after the delay time set by Pr.07-36.

07-36 Restart Delay Time after Power Off

Default: 5

Settings 1–10 sec.

07-38 Voltage Feed Forward Gain

Default: 1.00

Settings 0.50–2.00

Adjusts the voltage feedback forward gain under MSI control, and to meet the demand of rapid feedback application.

Pr.07-38 = 1.00 means forward feedback = Ke × motor rotor speed

07-41 AES Minimum Frequency

Default: 10.00

Settings 0.00–40.00 Hz

The drive output frequency must be higher than Pr.07-41 to make the drive determine whether to run in a steady-state output frequency.

The power and voltage of high-frequency fields are larger and yield obvious energy-saving effects. A larger start-up current is needed for the low-speed zone, reducing voltage is unfavorable to low-speed zone. Therefore, you can use Pr.07-41 to limit the minimum frequency when AES is enabled (Pr.07-41 to Pr.01-00 is the frequency range that you can use for the AES function).

07-42 AES Delay Time

Default: 5

Settings 0–600 sec.

When the drive runs in a steady-state output frequency, and exceeds Pr.07-42 setting time, the drive enters the energy-saving mode.

07-44 AES Maximum Voltage Drop

Default: 60.00

Settings 0.00–70.00%

Define the maximum allowed voltage drop when the drive is in energy-saving mode.

The energy-saving effect is most obvious when the drive runs at no load or light load. However, the output voltage cannot drop indefinitely. You can use this parameter as the upper limit ratio (%) of the maximum voltage drop of the output voltage.

Maximum voltage drop = voltage command corresponding to the frequency command in the VF table (take Motor 1 VF curve as an example, Pr.01-01–01-08) × Pr.07-44 (%)

For example:

(1) Pr.01-01 = 60 Hz, Pr.01-02 = 380 V_{AC}, current frequency command is 60 Hz, the actual motor output is 371.2 V_{AC}, and Pr.07-44 = 60%, then
The maximum voltage drop = 380 V (voltage command corresponding to the frequency command in the VF table: 60 Hz corresponds to 380V) × 60% = 228 V_{AC}

(2) If the current frequency command is 30 Hz, the corresponded voltage in the VF table is 200 V_{AC}, and Pr.07-44 = 60%, then
The maximum voltage drop = 200V × 60% = 120 V_{AC}

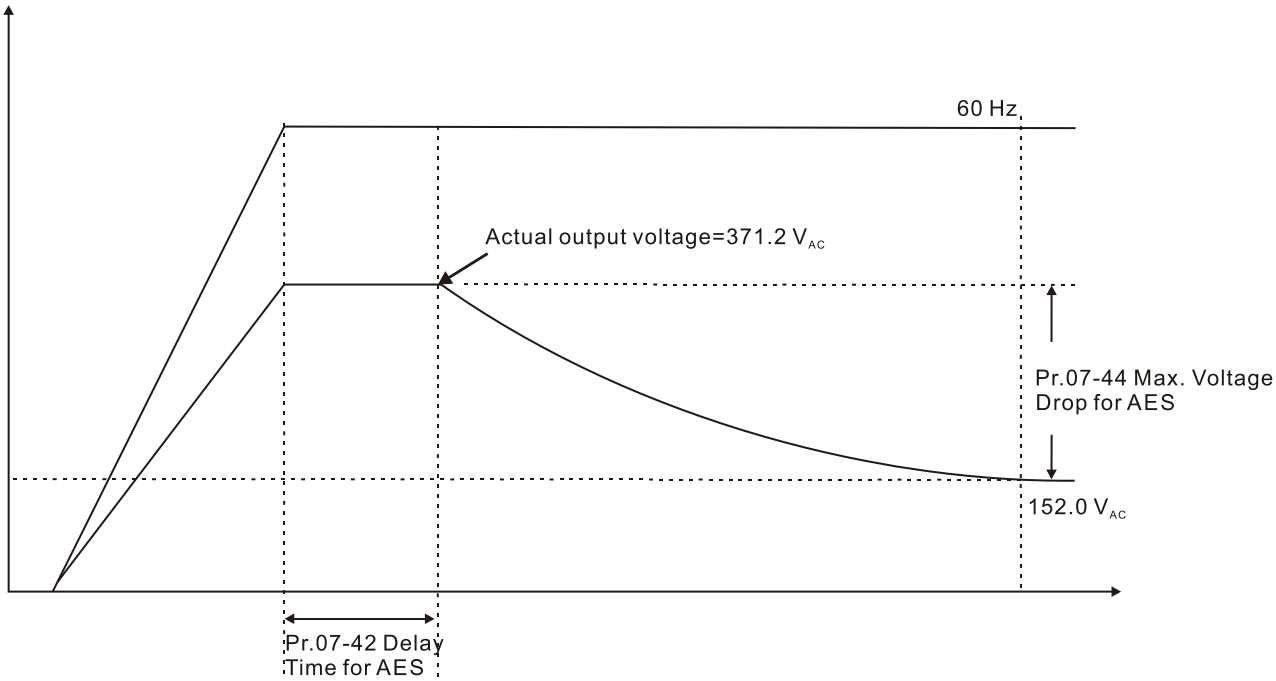

07-45 AES Coefficient

Default: 100

Settings 0–10000%

- Define the motor power loss constant. Default 100% corresponds to the drive's iron loss constant that is calculated by motor parameter auto-tuning or motor nameplate information.
- Pr.07-45 affects the final steady-state output voltage value for the energy-saving control. The larger the Pr.07-45 setting value, the higher the steady-state output voltage (smaller voltage drop). The smaller the Pr.07-45 setting value, the lower the steady-state output voltage (larger voltage drop).
- See below for the flowchart of AES adjustment with motor parameter auto-tuning (recommended):

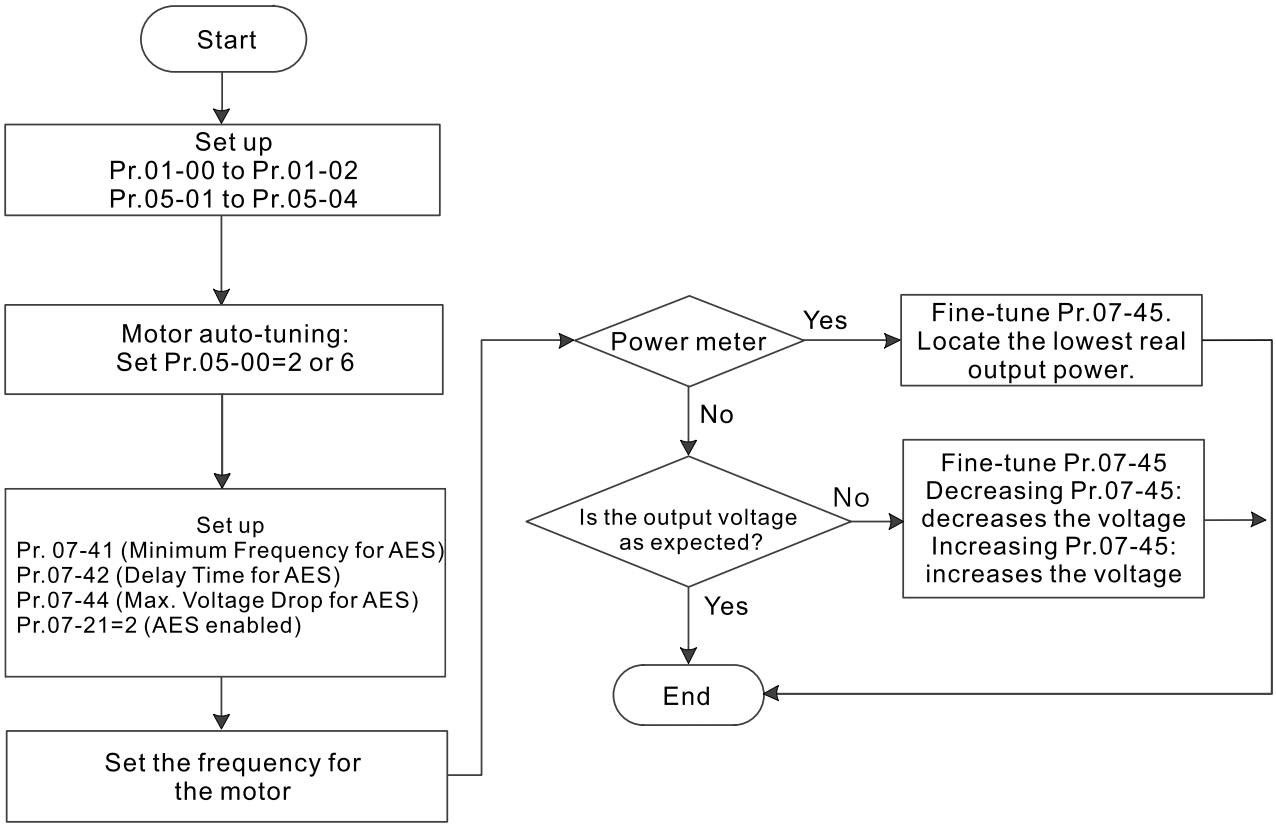

See below for the flowchart of AES adjustment without motor parameter auto-tuning (not recommended):

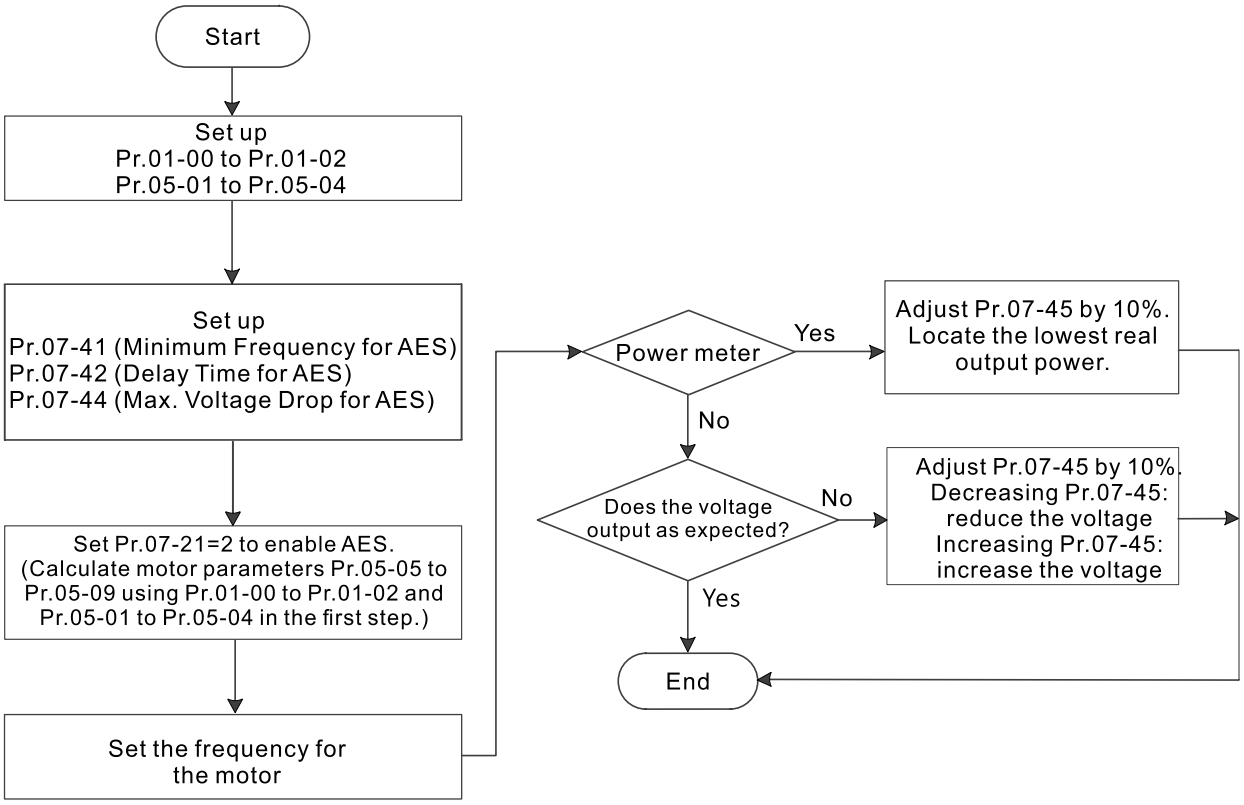

07-82 AES Kp Gain

Default: 500

Settings 0–65535 pu

This parameter can be used to adjust the AES gain. The default is 500%, if the energy saving effect is not good, you can adjust it downward; if the motor oscillates, you can adjust it upward.

In some applications, such as high-speed spindles, you have to pay more attention to the temperature rise of the motor. If the motor is not in the operation state, the current of the motor can be reduced to a lower current. Lower the parameter setting can achieve this requirement.

07-83 AES Ki Gain

Default: 500

Settings 0–65535 pu

[This page intentionally left blank]

08 High-function PID Parameters

You can set this parameter during operation.

08-00 Terminal selection of PID feedback

Default: 0

Settings 0: Disabled

1: Negative PID feedback: by analog input (Pr.03-00)

Negative feedback: Error = Target value (set point) – Feedback. Use negative feedback when the detection value increases if the output frequency increases.

When pump control function (PLC1) is enabled, Pr.08-00 will be automatically set to 0 and cannot be changed.

1. Common applications for PID control:
   - Flow control: Use a flow sensor to feedback the flow data and perform accurate flow control.
   - Pressure control: Use a pressure sensor to feedback the pressure data and perform precise pressure control.
   - Air volume control: Use an air volume sensor to feedback the air volume data to achieve excellent air volume regulation.
   - Temperature control: Use a thermocouple or thermistor to feedback temperature data for comfortable temperature control.
   - Speed control: Use a speed sensor to feedback motor shaft speed or input another machine speed as a target value for synchronous control.

2. PID control loop:

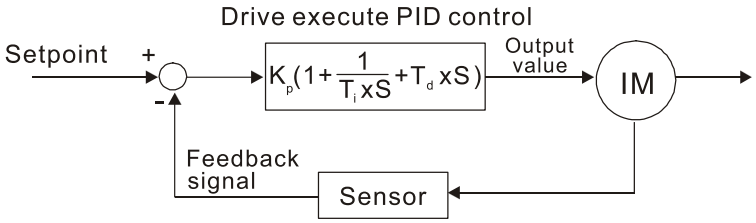

K_P Proportional Gain (P), T_i Integral Time (I), T_d Differential Time (D), S Calculation

3. Concept of PID control:
   (1) Proportional gain (P):
   The output is proportional to input. With only a proportional gain control, there is always a steady-state error.
   (2) Integral time (I):
   The controller output is proportional to the integral of the controller input. When an automatic control system is in a steady state and a steady-state error occurs, the system is called a System with Steady-state Error. To eliminate the steady-state error, add an “integral part” to the controller. The integral time controls the relation between the integral part and the error. The integral part increases over time even if the error is small. It gradually increases the controller output to eliminate the error until it is zero. This stabilizes the system without a steady-state error by using proportional gain control and integral time control.

(3) Differential control (D):

The controller output is proportional to the differential of the controller input. During elimination of the error, oscillation or instability may occur. Use the differential control to suppress these effects by acting before the error. That is, when the error is near 0, the differential control should be 0. Use proportional gain (P) and differential control (D) to improve the system state during PID adjustment.

4. Using PID control in a constant pressure pump feedback application:

Set the application's constant pressure value (bar) to be the set point of PID control. The pressure sensor sends the actual value as the PID feedback value. After comparing the PID set point and PID feedback, an error display. The PID controller calculates the output by using proportional gain (P), integral time (I) and differential time (D) to control the pump. It controls the drive to use a different pump speed and achieves constant pressure control by using a 4–20 mA signal corresponding to 0–10 bar as feedback to the drive.

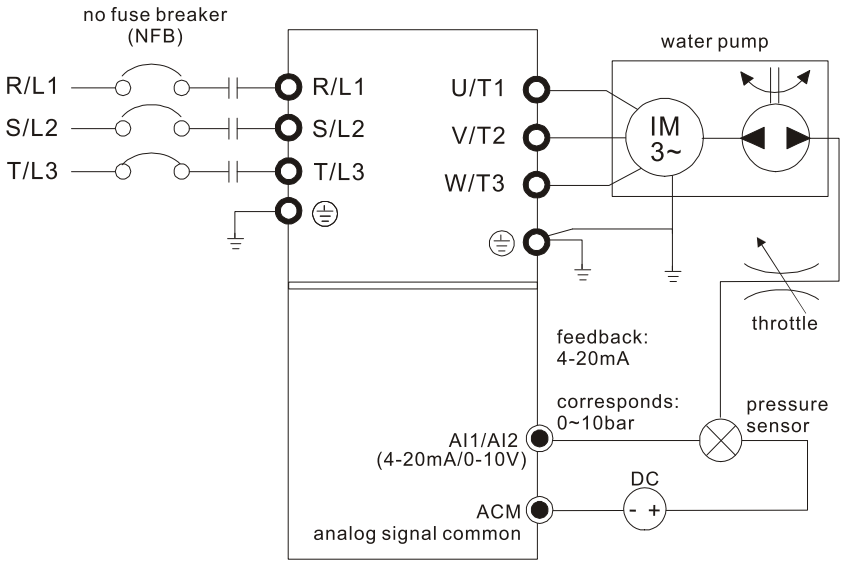

- Pr.00-03 = 4 (displays PID target value and analog feedback signal value)
- Pr.01-12 Acceleration Time is set according to actual conditions.
- Pr.01-13 Deceleration Time is set according to actual conditions.
- Pr.00-21 = 0, operate through the digital keypad
- Pr.00-20 = 0, the digital keypad controls the set point.
- Pr.00-25 = 353, set user-defined AI signal unit to be one decimal place.
- Pr.00-26 = 10, set user-defined AI signal maximum is 10.0 bar.
- Pr.08-00 = 1 (negative PID feedback from analog input)
- AI1 analog input Pr.03-00 = 5, PID feedback signal.
- Set Pr.03-28 as 2 to be current type sensor 4–20 mA, and make sure DIP switch is on current type side.
- Set Pr.08-01-08-03 according to actual conditions.
  If there is no oscillation in the system, increase Pr.08-01 (Proportional Gain (P))
  If there is no oscillation in the system, decrease Pr.08-02 (Integral Time (I))
  If there is no oscillation in the system, increase Pr.08-03 (Differential Time (D))
- Refer to Pr.08-00–08-21 for PID parameter settings.

08-01 Proportional Gain (P)

Default: 1.00

Settings 0.0–500.0 (when Pr.08-23 setting bit 1=0)
0.00–500.00 (when Pr.08-23 setting bit 1=1)

- 1.0: Kp gain is 100%; if the setting is 0.5, Kp gain is 50%.
- Sets the proportional gain to determine the deviation response speed. The higher the proportional gain, the faster the response speed, and causes oscillation. The lower the proportional gain, the slower the response speed. Eliminate the system deviation; usually used to decrease the deviation and get faster response speed. If you set the value too high, overshoot occurs and it may cause system oscillation and instability.
- If you set the other two gains (I and D) to zero, proportional control is the only effective parameter.

08-02 Integral Time (I)

Default: 1.00

Settings 0.00–100.00 sec.

- Use the integral controller to eliminate the deviation during stable system operation. The integral control does not stop working until the deviation is zero. The integral is affected by the integral time. The smaller the integral time, the stronger the integral action. It is helpful to reduce overshoot and oscillation for a stable system. Accordingly, the speed to lower the steady-state deviation decreases. The integral control is often used with the other two controls for the PI controller or PID controller.
- Sets the integral time of the I controller. When the integral time is long, there is a small I controller gain, with slower response and slow external control. When the integral time is short, there is a large I controller gain, with faster response and rapid external control.
- When the integral time is too short, it may cause overshoot or oscillation for the output frequency and system.
- Set Integral Time to 0.00 to disable the I controller.

08-03 Differential Time (D)

Default: 0.00

Settings 0.00–1.00 sec.

- Use the differential controller to show the system deviation change, as well as to preview the change in the deviation. You can use the differential controller to eliminate the deviation in order to improve the system state. Using a suitable differential time can reduce overshoot and shorten adjustment time; however, the differential operation increases noise interference. Note that a too large differential causes more noise interference. In addition, the differential shows the change and the differential output is 0 when there is no change. Note that you cannot use the differential control independently. You must use it with the other two controllers for the PD controller or PID controller.
- Sets the D controller gain to determine the deviation change response. Using a suitable differential time reduces the P and I controllers overshoot to decrease the oscillation for a stable system. A differential time that is too long may cause system oscillation.
- The differential controller acts on the change in the deviation and cannot reduce the interference. Do not use this function when there is significant interference.

08-04 Upper Limit of Integral Control

Default: 100.0

Settings 0.0–100.0%

- Defines an upper bound for the integral gain (I) and therefore limits the master frequency.
  The formula is: Integral upper bound = Maximum Operation Frequency (Pr.01-00) x (Pr.08-04%).
- An excessive integral value causes a slow response due to sudden load changes and may cause motor stall or machine damage. If so, decrease it to a proper value.

08-05 PID Output Command Limit (Positive Limit)

Default: 100.0

Settings 0.0–100.0%

- Define the percentage of the output frequency limit during the PID control.
  The formula is Output Frequency Limit = Maximum Operation Frequency (Pr.01-00) × Pr.08-05%.

08-20 PID Mode Selection

Default: 0

Settings 0: Serial connection
1: Parallel connection

- 0: Use conventional PID control structure.
  1: The proportional gain, integral gain and differential gain are independent. You can customize the P, I and D value to fit your application.
- This parameter determines the primary low pass filter time when in PID control. Setting a large time constant may slow down the drive's response speed.
- PID control output frequency is filtered with a primary low pass function. This function can filter a mix of frequencies. A long primary low pass time means the filter degree is high and a short primary low pass time means the filter degree is low.
- Inappropriate delay time setting may cause system oscillation.
- PI Control:
  Controlled only by the P action, so the deviation cannot be entirely eliminated. In general, to eliminate residual deviations, use the P + I controls. When you use the PI control, it eliminates the deviation caused by the targeted value changes and the constant external interferences. However, if the I action is too powerful, it delays the response when there is rapid variation. You can use the P action by itself to control the loading system with the integral components.
- PD Control:
  When deviation occurs, the system immediately generates an operation load that is greater than the load generated only by the D action to restrain the deviation increment. If the deviation is small, the effectiveness of the P action decreases as well. The control objects include applications with integral component loads, which are controlled by the P action only. Sometimes, if the integral component is functioning, the whole system may oscillate. In this case, use the PD control to reduce the P action's oscillation and stabilize the system. In other words, this control is useful with no brake function's loading over the processes.

PID Control:

Use the I action to eliminate the deviation and the D action to reduce oscillation; then combine this with the P action for the PID control. Use the PID method for a control process with no deviations, high accuracy, and a stable system.

Serial connection

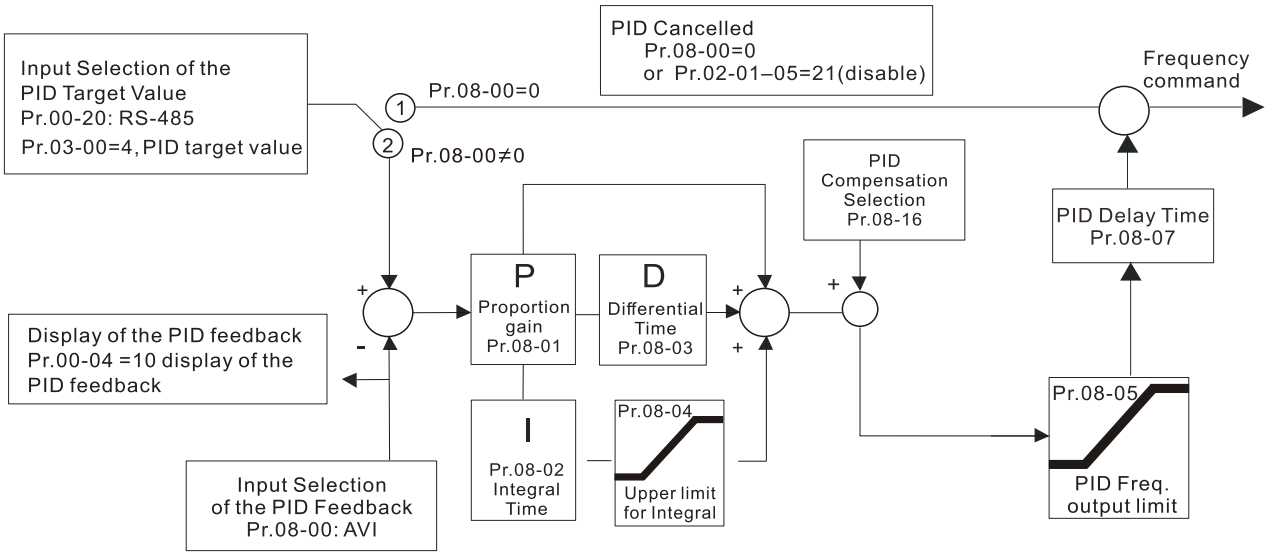

Parallel connection

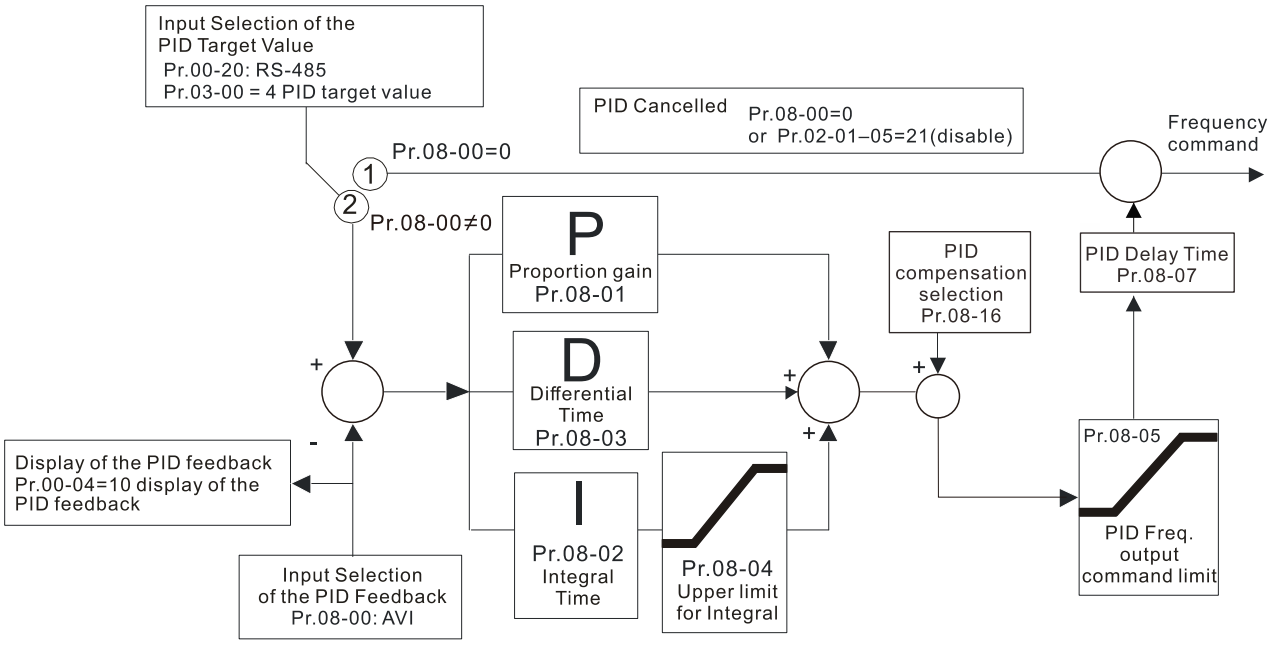

08-08 Feedback Signal Detection Time

Default: 0.0

Settings 0.0–3600.0 sec.

Valid only when the feedback signal is 4–20 mA (Pr.03-28 = 2).

This parameter sets the detection time for abnormal PID signal feedback. You can also use it when the system feedback signal response is extremely slow. (Setting the detection time to 0.0 disables the detection function.)

08-09 Treatment of Feedback Signal

Default: 0

Settings
0: Warn and continue operation
1: Fault and ramp to stop
2: Fault and coast to stop
3: Warn and operate at last frequency

- Valid only when the feedback signal is 4–20 mA (Pr.03-28 = 2).
- Set the treatments when the PID feedback signal is abnormal.

08-23 PID Control Flag

Default: 2

Settings
bit 1 = 1, two decimal places for PID Kp
bit 1 = 0, one decimal place for PID Kp
bit 2 = 1, positive feedback
bit 2 = 0, negative feedback

- When the bit1 setting changes, the Kp gain does not change.
  For example: Kp = 6. When Pr.08-23 bit1 = 0, Kp = 6.0; when Pr.08-23 bit1 = 1, Kp = 6.00.

08-55 PID Feedback Mathematics

Default: 0

Settings
0: AI1
1: AI1 + k*AI2
2: AI1 - k*AI2
3: AI1 * k*AI2
4: AI1 / k*AI2
5: MIN(AI1, AI2)
6: MAX(AI1, AI2)
7: AVE(AI1, AI2)
8: sqrt(AI1)
9: sqrt(AI1 – AI2)
10: sqrt(AI1 + AI2)
11: sqrt(AI1) + sqrt(AI2)
12: k * sqrt(AI1)
13: k * sqrt(AI1 – AI2)
14: $(AI1 - AI2)^2$
15: $(AI1)^2 + (AI2)^2$

- When executing PID control, the feedback source can be the value calculated from different mathematical source. k is the value set by Pr.08-56.

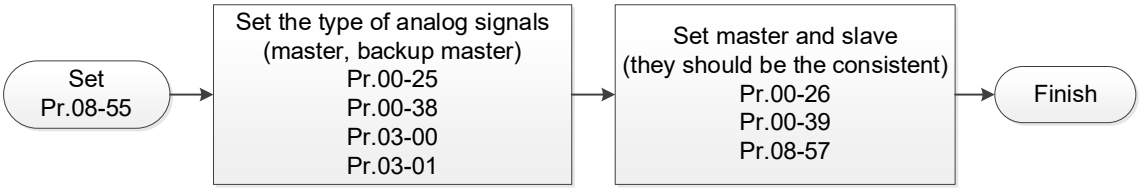

08-56 PID Feedback Mathematics Gain

Default: 1.0

Settings -300.0–300.0

Define the k value for the mathematics of Pr.08-55.

08-57 PID Feedback Mathematics Upper Limit

Default: 0

Settings 0–999

This parameter limits the PID feedback mathematical operation value of when Pr.08-55 ≠ 0.

[This page intentionally left blank]

09 Communication Parameters

Using communication interface, it's recommended that uses Delta's IFD6530 or IFD6500 as communication adapter, and uses terminal SG+, SG- to connect the drive and PC.

You can set this parameter during operation.

09-00 Communication Address

Default: 1

Settings 1–254

- Set the communication address for the drive if the AC motor drive is controlled through RS-485 serial communication. The communication address for each AC motor drive must be unique.
- When multi-master function of PLC is enabled, every drive has to set the parameter for distinguishing station address.

09-01 COM1 Transmission Speed

Default: 115.2

Settings 4.8–115.2 Kbps

- Set the transmission speed between the computer and the AC motor drive.
- Options are 4.8 Kbps, 9.6 Kbps, 19.2 Kbps, 38.4 Kbps, or 115.2 Kbps; if the setting value is not to be one of the transmission speeds mentioned above, then the drive uses 9.6 Kbps.

09-02 COM1 Transmission Fault Treatment

Default: 3

Settings
0: Warn and continue operation
1: Fault and ramp to stop
2: Fault and coast to stop
3: No warning, no fault, and continue operation

- Determines the treatment when an error is detected that the host controller does not continuously transmit data to the AC motor drive during Modbus communication. The detection time is based on the Pr.09-03 setting.
- When a transmission error occurs (for example, the error code CE10 is displayed), the error remains even if the transmission status returns to normal, and does not clear automatically. In this case, set a reset command (Reset) to clear the error.

09-03 COM1 Time-out Detection

Default: 0.0

Settings 0.0–100.0 sec.

- Set the communication time-out.
- It's recommended that sets the value to be 10.0 seconds under multi-master mode (enables built-in PLC function).

09-04 COM1 Communication Protocol

Default: 12

Settings
1: 7, N, 2 (ASCII)
2: 7, E, 1 (ASCII)

3: 7, O, 1 (ASCII)
4: 7, E, 2 (ASCII)
5: 7, O, 2 (ASCII)
6: 8, N, 1 (ASCII)
7: 8, N, 2 (ASCII)
8: 8, E, 1 (ASCII)
9: 8, O, 1 (ASCII)
10: 8, E, 2 (ASCII)
11: 8, O, 2 (ASCII)
12: 8, N, 1 (RTU)
13: 8, N, 2 (RTU)
14: 8, E, 1 (RTU)
15: 8, O, 1 (RTU)
16: 8, E, 2 (RTU)
17: 8, O 2 (RTU)

- COM1 is for multi-pump control of MPD.
- COM2 is for writing in PLC, connecting to upper device.

09-05 COM2 Transmission Speed

Default: 9.6

Settings 4.8–115.2 Kbps

- Set the transmission speed between the computer and the AC motor drive.
- Options are 4.8 Kbps, 9.6 Kbps, 19.2 Kbps, 38.4 Kbps, or 115.2 Kbps; if the setting value is not to be one of the transmission speeds mentioned above, then the drive uses 9.6 Kbps.

09-06 COM2 Transmission Fault Treatment

Default: 3

Settings 0: Warn and continue operation
1: Fault and ramp to stop
2: Fault and coast to stop
3: No warning, no fault, and continue operation

- Determines the treatment when an error is detected that the host controller does not continuously transmit data to the AC motor drive during Modbus communication. The detection time is based on the Pr.09-07 setting.
- When a transmission error occurs (for example, the error code CE10 is displayed), the error remains even if the transmission status returns to normal, and does not clear automatically. In this case, set a reset command (Reset) to clear the error.

09-07 COM2 Time-out Detection

Default: 0.0

Settings 0.0–100.0 sec.

- Set the communication time-out.

09-08 COM2 Communication Protocol

Default: 1

Settings
1: 7, N, 2 (ASCII)
2: 7, E, 1 (ASCII)
3: 7, O, 1 (ASCII)
4: 7, E, 2 (ASCII)
5: 7, O, 2 (ASCII)
6: 8, N, 1 (ASCII)
7: 8, N, 2 (ASCII)
8: 8, E, 1 (ASCII)
9: 8, O, 1 (ASCII)
10: 8, E, 2 (ASCII)
11: 8, O, 2 (ASCII)
12: 8, N, 1 (RTU)
13: 8, N, 2 (RTU)
14: 8, E, 1 (RTU)
15: 8, O, 1 (RTU)
16: 8, E, 2 (RTU)
17: 8, O 2 (RTU)

Control by PC (Computer Link)

When using the RS-485 serial communication interface, you must specify each drive's communication address in Pr.09-00. The computer then implements control using the drives' individual addresses.

Modbus ASCII (American Standard Code for Information Interchange): Each byte of data is the combination of two ASCII characters. For example, one byte of data: 64 Hex, shown as '64' in ASCII, consists of '6' (36Hex) and '4' (34Hex).

09-09 Communication Response Delay Time

Default: 2.0

Settings 0.0–200.0 ms

If the host controller does not finish the transmitting/receiving process, you can use this parameter to set the response delay time after the AC motor drive receives communication command as shown in the following picture.

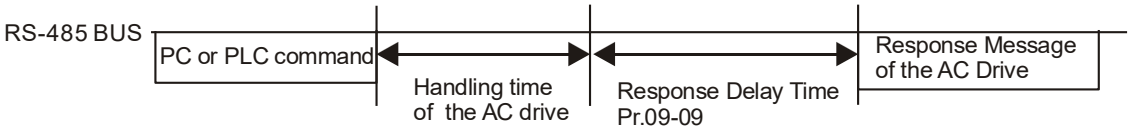

09-10 Communication Main Frequency

Default: 60.00

Settings 0.00–599.00 Hz

When you set Pr.00-20 to 1 (RS-485 serial communication), the AC motor drive saves the last Frequency command into Pr.09-10 when there is abnormal power off or momentary power loss. When power is restored, the AC motor drive operates with the frequency in Pr.09-10 if there is no

new Frequency command input. When a Frequency command of 485 changes (the Frequency command source must be set as Modbus), this parameter also changes.

09-11	Block Transfer 1
09-12	Block Transfer 2
09-13	Block Transfer 3
09-14	Block Transfer 4
09-15	Block Transfer 5
09-16	Block Transfer 6
09-17	Block Transfer 7
09-18	Block Transfer 8
09-19	Block Transfer 9
09-20	Block Transfer 10
09-21	Block Transfer 11
09-22	Block Transfer 12
09-23	Block Transfer 13
09-24	Block Transfer 14
09-25	Block Transfer 15
09-26	Block Transfer 16

Default: 0

Settings 0–65535

There is a group of block transfer parameters available in the AC motor drive (Pr.09-11–Pr.09-26). Using communication code 03H, you can store the parameters (Pr.09-11–Pr.09-26) that you want to read.

09-30 Communication Decoding Method

Default: 0

Settings 0: Decoding method 1
1: Decoding method 2

The EtherCAT communication card only supports Decoding Method 2 (60xx).

Communication Decoding Method		Decoding Method 1	Decoding Method 2
Source of operation control	Digital Keypad	Digital keypad controls the drive action regardless of decoding method 1 or 2.	
	External Terminal	External terminal controls the drive action regardless of decoding method 1 or 2.	
	RS-485	Refer to address: 2000h–20FFh	No support for 6000h decoding
	Communication Card	Refer to address: 2000h–20FFh	Refer to address: 6000h–60FFh

09-31 COM1 internal communication protocol

Default: 0

Settings 0: Modbus 485

09-32 SG2 COM Protocol

Default: 0

Settings 0: Modbus
1: BACnet/TP

09-33 PLC command force to 0

Default: 0

Settings bit 0: every time before PLC scan, set the PLC target frequency = 0
bit 1: every time before PLC scan, set the PLC target torque = 0
bit 2: every time before PLC scan, set the speed limit of torque mode = 0

Define whether the Frequency command or the Speed command must be cleared to zero or not before the PLC starts the next scan.

09-34 PLC Program ID

Default: 0

Settings 0–65535

09-35 PLC Address

Default: 100

Settings 1–254

09-45 BACnet MAC ID

Default: 10

Settings 0–127

09-46 BACnet MAC ID Macimum

Default: 127

Settings 0–127

09-47 BACnet Device ID

Default: 55

Settings 0–127

09-48 BACnet Password

Default: 0

Settings 0–65535

09-60 Communication card identification

Default: Read only

Settings 0: No communication card
1: DeviceNet Slave
2: Profibus-DP Slave
5: EtherNet/IP Slave
12: Profinet
13: Bluetooth

09-61 Firmware Version of Communication Card

Default: Read only

Settings 0–65535

09-62 Product Code

Default: Read only

Settings 0–65535

09-63 Fault code

Default: Read only

Settings 0–65535

09-70 Communication Card Address (for DeviceNet or Profibus)

Default: 1

Settings DeviceNet: 0–63
Profibus-DP: 1–125

09-71 Communication card speed setting (for DeviceNet)

Default: 2

Settings Standard DeviceNet:
0: 125 Kbps
1: 250 Kbps
2: 500 Kbps
3: 1 Mbps (Delta Only)
Non-standard DeviceNet: (Delta only)
0: 10 Kbps
1: 20 Kbps
2: 50 Kbps
3: 100 Kbps
4: 125 Kbps
5: 250 Kbps
6: 500 Kbps
7: 800 Kbps
8: 1 Mbps

09-72 Additional Settings for Communication Card Speed (for DeviceNet)

Default: 0

Settings 0: Standard DeviceNet
1: Non-standard DeviceNet

- Use this parameter with Pr.09-71.
- 0: The baud rate can only be set to 125 Kbps, 250 Kbps and 500 Kbps as a standard DeviceNet speed.
- 1: The DeviceNet communication rate can be the same as that for CANopen (setting 0–8).

09-75 Communication Card IP Configuration (for EtherNet)

Default: 0

Settings 0: Static IP
1: Dynamic IP (DHCP)

0: Set the IP address manually.

1: IP address is dynamically set by the host controller.

09-76 Communication Card IP Address 1 (for EtherNet)
09-77 Communication Card IP Address 2 (for EtherNet)
09-78 Communication Card IP Address 3 (for EtherNet)
09-79 Communication Card IP Address 4 (for EtherNet)

Default: 0

Settings 0–255

Use Pr.09-76–09-79 with a communication card.

09-80 Communication Card Address Mask 1 (for EtherNet)
09-81 Communication Card Address Mask 2 (for EtherNet)
09-82 Communication Card Address Mask 3 (for EtherNet)
09-83 Communication Card Address Mask 4 (for EtherNet)

Default: 0

Settings 0–255

09-84 Communication Card Gateway Address 1 (for EtherNet)
09-85 Communication Card Gateway Address 2 (for EtherNet)
09-86 Communication Card Gateway Address 3 (for EtherNet)
09-87 Communication Card Gateway Address 4 (for EtherNet)

Default: 0

Settings 0–255

09-88 Communication Card Password (Low Word) (for EtherNet)
09-89 Communication Card Password (High Word) (for EtherNet)

Default: 0

Settings 0–99

09-90 Reset Communication Card (for EtherNet)

Default: 0

Settings 0: No function
1: Reset to defaults

09-91 Additional setting for the communication card (for EtherNet)

Default: 0

Settings bit 0: Enable IP filter
bit 1: Enable internet parameters
bit 2: Enable login password

bit0: Set this bit as 1 to enable IP filter function; sets this bit as 0 to disable IP filter function.

bit1: Set this bit as 1, this function updates the parameter settings from internet side (Pr.09-75–09-87) to communication card. After communication card finishes the update, sets this bit as 0 to disable it.

📖 bit2: Set this bit as 1, this function updates the login password (Pr.09-88–09-89) to communication card. After communication card finishes the update, sets this bit as 0 to be disable.

09-92 Communication card status (for EtherNet)

Default: Read only

Settings bit 0: Enable password

📖 bit0: This bit is set as 1 to be enable if communication card sets a password (Pr.09-91, bit2 =1). After clearing the password of communication card, sets this bit as 0 to be disable.

10 Speed Feedback Control Parameters

You can set this parameter during operation.

10-29 Upper Limit of Frequency Deviation

Default: 20.00

Settings 0.00–200.00 Hz

- Limit the maximum frequency deviation.
- If you set this parameter too high, an abnormal feedback malfunction will occurs.

10-31 MSI Motor Control Current Compensation Command

Default:40

Settings 0–150% rated current of the motor

- Set the current command for the drive in low speed area.
  When the motor stalls on heavy duty start-up or forward / reverse with load, increase the parameter value. If the inrush current is too high and causes oc stall, then decrease the parameter value.

10-32 Speed Estimator Bandwidth

Default:5.00

Settings 0.00–600.00 Hz

- Set the speed estimator bandwidth. Adjust the parameter to influence the stability and the accuracy of the motor speed.
- If there is low frequency vibration (the waveform is similar to a sine wave) during the process, then increase the bandwidth. If there is high frequency vibration (the waveform shows extreme vibration and is like a spur), then decrease the bandwidth.

10-34 Speed Estimator Low-pass Filter Gain

Default: 1.00

Settings 0.00–655.35

- Influences the response speed of the speed estimator.
- If there is low frequency vibration (the waveform is similar to a sine wave) during the process, then increase the gain.
- If there is high frequency vibration (the waveform shows extreme vibration and is like a spur), then decrease the gain.

10-37 PM Sensorless Control bit

Default: 0000

Settings 0000h–FFFFh

bit no.	Function	Application scenario	Description
2	SVC high-speed frequency compensation advanced adjustment	Vibrates at high speed	0: Disabled 1: Enabled, refer to the descriptions of Pr.10-54 and Pr.10-55.

bit no.	Function	Application scenario	Description
6	SVC low-speed voltage feedforward advanced adjustment	Poor start-up at low speed, vibrates at low speed	0: Disabled 1: Enabled, refer to the description of Pr.10-56.
7	SVC low-speed IR voltage compensation function	Poor start-up at low speed, vibrates at low speed	0: Disabled 1: Enabled, refer to the description of Pr.10-40

10-39 MSI Motor Control Current Compensation Frequency Point

Default:15.00

Settings 0.00–599.00 Hz

📖 If the compensation point is too high, the drive easily runs in the frequency area of current compensation for a long time, which generates a larger current and cannot save energy.

10-40 Switch Point for Low-Speed IR Voltage Frequency Compensation

Default:20.00

Settings 0.00–599.00 Hz

📖 Adjusting this parameter can affect the response speed of speed estimator. When Pr.10-37 SVC mode control bit7 = 0, SVC low-speed IR voltage compensation is performed as the mentioned below. Increasing Pr.10-40 can expand IR voltage compensation range and improve the situations that the vibration at low speed, poor start-up.

1. During acceleration, if the output frequency is lower than Pr.10-39, perform low-speed IR voltage compensation.
2. During deceleration, if Pr.10-40 is lower than Pr.10-39, once the output frequency is lower than Pr.10-40, low-speed IR voltage compensation will be performed.
3. During deceleration, if Pr.10-40 is higher than Pr.10-39, once the output frequency is lower than Pr.10-39, low-speed IR voltage compensation will be performed.

📖 When Pr.10-47 SVC mode control bit7 = 1, SVC low-speed IR voltage compensation will not be performed.

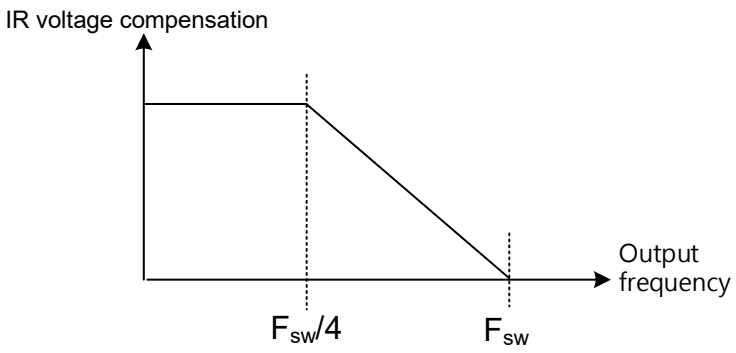

During acceleration: F_{SW} = Pr.10-39

During deceleration: If Pr.10-40 < Pr.10-39, F_{SW} = Pr.10-40;

If Pr.10-40 > Pr.10-39, F_{SW} = Pr.10-39

10-42 Initial Angle Detection Pulse Value

Default:1.0

Settings 0.0–3.0

- It's valid when Pr.10-53 = 3.
- Activate the function by using pulse injection method. The parameter influences the value of the pulse during the angle detection. The larger the pulse, the higher the accuracy of rotor's position. A larger pulse might cause oc.
- Increase the parameter when the running direction and the command are opposite during start-up. If oc occurs at start-up, then decrease the parameter.

10-49 Zero Voltage Time During Start-up

Default: 00.000

Settings 00.000–60.000 sec.

- This parameter is valid when the setting of Pr.07-12 (Speed Tracking during Start-up) = 0.
- When the motor is in static state at start-up, this increases the accuracy when estimating angles. In order to put the motor in static state, set the three-phase of the drive output to the motor to 0 V. The Pr.10-49 setting time is the length of time for three-phase output at 0 V.
- It is possible that even when you apply this parameter, the motor cannot go in to the static state because of inertia or some external force. If the motor does not go into a complete static state in 0.2 seconds, increase this setting value appropriately.
- If Pr.10-49 is set too high, the start-up time is longer. If it is too low, then the braking performance is weak.

10-51 Injection Frequency

Default:500

Settings 0–1200 Hz

- It's valid when Pr.10-53 = 2.
- This parameter is a high frequency injection command in MSI control, and usually you do not need to adjust it.
  But if a motor's rated frequency (for example, 400 Hz) is too close to the frequency setting for this parameter (that is, the default of 500 Hz), it affects the accuracy of the angle detection. Refer to the setting for Pr.01-01 before you adjust this parameter.
- If the setting value for Pr.00-17 is lower than Pr.10-51 x 10, then increase the frequency of the carrier frequency.

10-52 Injection Magnitude

Default:30.0

Settings 0.0–200.0 V

- It's valid when Pr.10-53 = 2.
- The parameter is the magnitude command for the high frequency injection signal when detecting MSI angle at start-up.
- Increasing the parameter can increase the accuracy of the angle estimation, but the electromagnetic noise might be louder if the setting value is too high.

- The system uses this parameter when the motor's parameter is "Auto". This parameter influences the angle estimation accuracy.
- When the ratio of the salient pole (Lq / Ld) is lower, increase Pr.10-52 to make the angle detection accurate.

10-53 Angle Detection Method

Default: 0

Settings 0: No function
1: Force attracting the rotor to zero degree
2: High frequency injection
3: Pulse injection

- Use this parameter to adjust initial angle detection when the motor runs abnormally or has large current at startup.

10-54 Rated Rotational Speed Compensation Percentage

Default: 100

Settings 0–1000 %

10-55 High Rotational Speed Compensation Percentage

Default: 100

Settings 0–1000 %

- When Pr.10-37 SVC mode control bit2 = 1, SVC high-speed frequency compensation advanced adjustment is performed as the mentioned below. Change the setting of Pr.10-54 and Pr.10-55 can adjust the frequency compensation gain at high-speed to improve high-speed vibration.
  1. If the output frequency is lower than Pr.10-39, the frequency compensation gain = Pr.10-34.
  2. If the output frequency is between Pr.10-39 and the rated frequency (Pr.01-01), the frequency compensation gain varies with output frequency, the maximum will be Pr.10-34 x Pr.10-55 (%).
  3. If the output frequency is between the rated frequency (Pr.01-01) and 1.5 times of the rated frequency, the frequency compensation gain varies with output frequency, the maximum will be Pr.10-34 x Pr.10-55 (%).
  4. When Pr.10-37 SVC mode control bit2 = 1, SVC high-speed frequency compensation advanced adjustment will not be performed. The speed compensation gain of full-speed range = Pr.10-34.

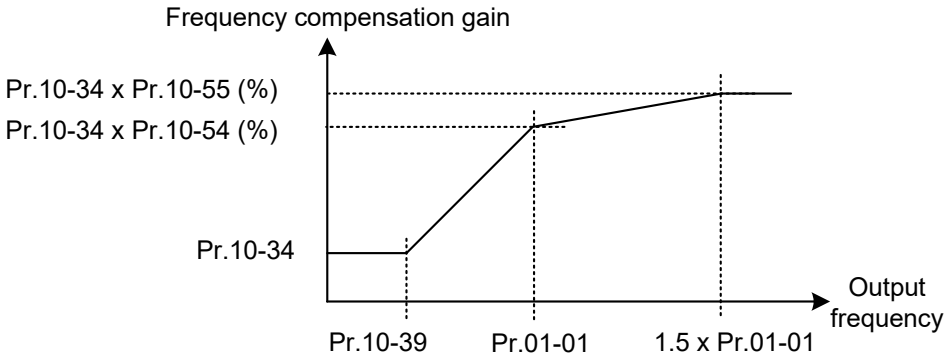

10-56 Low Speed Voltage Feedforward Percentage

Default: 100

Settings 0–150 %

When Pr.10-37 SVC mode control bit6 = 1, SVC low-speed voltage feedforward advanced adjustment is performed as the mentioned below. Change the setting of Pr.10-57 can adjust the low-speed voltage feedforward gain to improve vibration and poor start-up at low speed.

1. If the output frequency is lower than Pr.10-39, the voltage feedforward gain varies with output frequency, the maximum will be Pr.07-38 x Pr.10-56 (%).
2. If the output frequency is higher than Pr.10-39, the voltage feedforward gain = Pr.07-38.

When Pr.10-37 SVC mode control bit6 = 1, SVC low-speed voltage feedforward advanced adjustment will not be performed. The low-speed voltage feedforward gain = Pr.07-38.

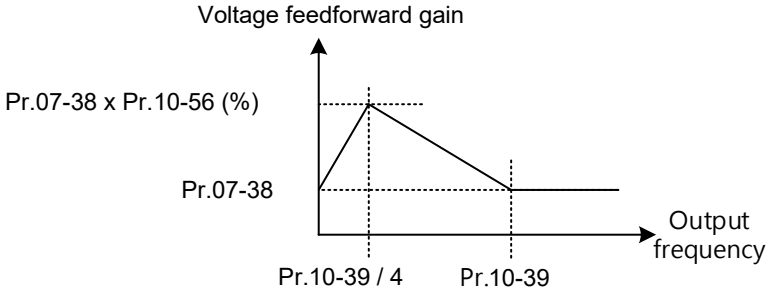

[This page intentionally left blank]

11 Advanced Parameters

✓You can set this parameter during operation.

11-00 System Control

Default: 0

Settings bit 3: Dead time compensation closed
bit 7: Save or do not save the frequency

- bit 3 = 0: Enable dead time compensation
- bit 3 = 1: Disable dead time compensation
- bit 7 = 0: Save the frequency before power is OFF. When power is ON again, the saved frequency is displayed.
- bit 7 = 1: Do not save the frequency before power is OFF. When power is ON again, 0.00 Hz is the displayed frequency.

11-41 PWM Mode Selection

Default: 0

Settings 0: Two-phase modulation mode
2: Space vector modulation mode

- Two-phase modulation mode: effectively reduces the drive power component losses and provides better performance in long wiring applications.
- Space vector modulation mode: effectively reduces the power loss and electromagnetic noise of the motor.

✓ 11-42 System control flag

Default: 0000

Settings 0000–FFFFh

bit No.	Functions	Descriptions
0	Reserved	
1	FWD / REV action control	0: FWD / REV cannot be controlled by Pr.02-12 bit 0 & 1. 1: FWD / REV can be controlled by Pr.02-12 bit 0 & 1.
2–15	Reserved	

[This page intentionally left blank]

12 Function Parameters

You can set this parameter during operation.

12-00 Set Point Deviation Level

Default: 0

Settings 0–50%

The base of the parameter is the set point of PID control setting (the set point displays on the keypad when Pr.00-03 = 4)

12-01 Detection Time of Set Point Deviation Level

Default: 10

Settings 1–9999 sec.

If the deviation keeps within the range of Pr.12-00 and exceeds the time set in Pr.12-01, the AC motor drive decelerates to stop to be constant pressure status (this deceleration time is the setting for Pr.01-15). The system is in standby status when the deviation is within the range of PID set point (Pr.12-00) during deceleration. In the standby status, when the system pressure is lower than high / low water consumption conditions, the AC motor drive will start operating to pressurize the system.

Refer to Pr.12-02–12-04 for the settings of high and low water consumption conditions.

12-02 Offset Level of Low Water Consumption

Default:10

Settings 0–50%

The base of the parameter is the set point of PID control setting.

When the system is in standby status, if the pressure exceeds the deviation of low water consumption setting, the AC motor drive starts pressurizing.

12-03 Offset Level of High Water Consumption

Default: 0

Settings 0: No function
0–100%

The base of the parameter is the set point of PID control setting.

12-04 High Water Consumption Delay Time

Default: 0.5

Settings 0: No function
0.1–10.0 sec.

When the system is in standby status, if the pressure change exceeds the deviation within the time set in Pr.12-03 and 12-04, the AC motor drive starts pressurizing.

Example:

If the set point of constant pressure control of a pump is 4 bar, Pr.12-00 is set to 5%, Pr.12-01 is set to 15 seconds, Pr.12-02 is set to 25%, Pr.12-03 is set to 3% and Pr.12-04 is set to 0.5 seconds, then the deviation is 0.2 bar (4 bar x 5% = 0.2 bar). It means when the feedback value is higher than 3.8 bar for a time exceeding 15 seconds, the AC motor drive decelerates to stop, this deceleration time acts according to Pr.01-15.

Status 1: Low water consumption restart detection

When the AC motor drive is in constant pressure status, it does not operate until the feedback change value is ≥ 1 bar than set point deviation (4 bar x 25% = 1 bar), which means the AC motor drive starts operating when the feedback value is less than 3 bar.

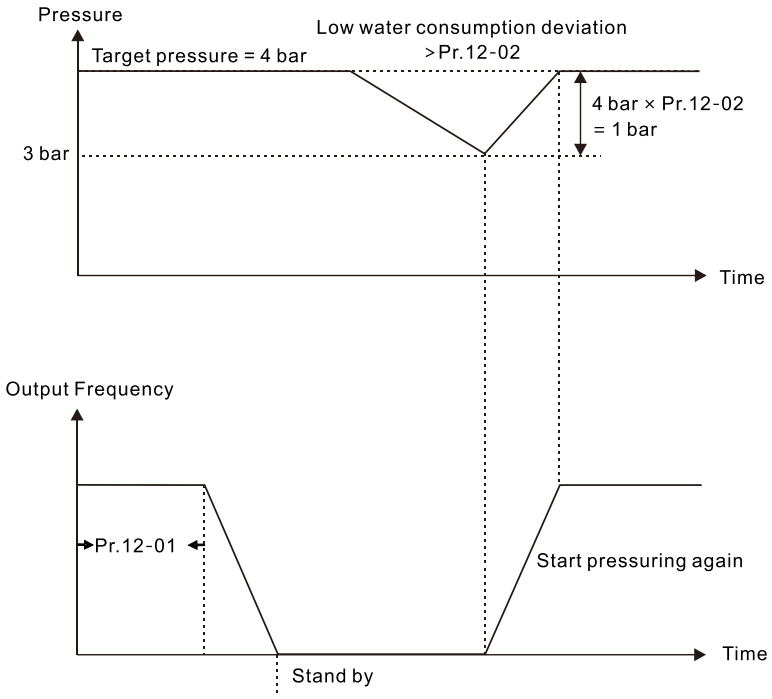

Status 2: High water consumption restart detection

When the AC motor drive is in constant pressure status, it does not operate until the feedback change value exceeds 0.12 bar within 0.5 seconds, which means the AC motor drive starts operating when the feedback value is less than 3.88 bar within 0.5 seconds.

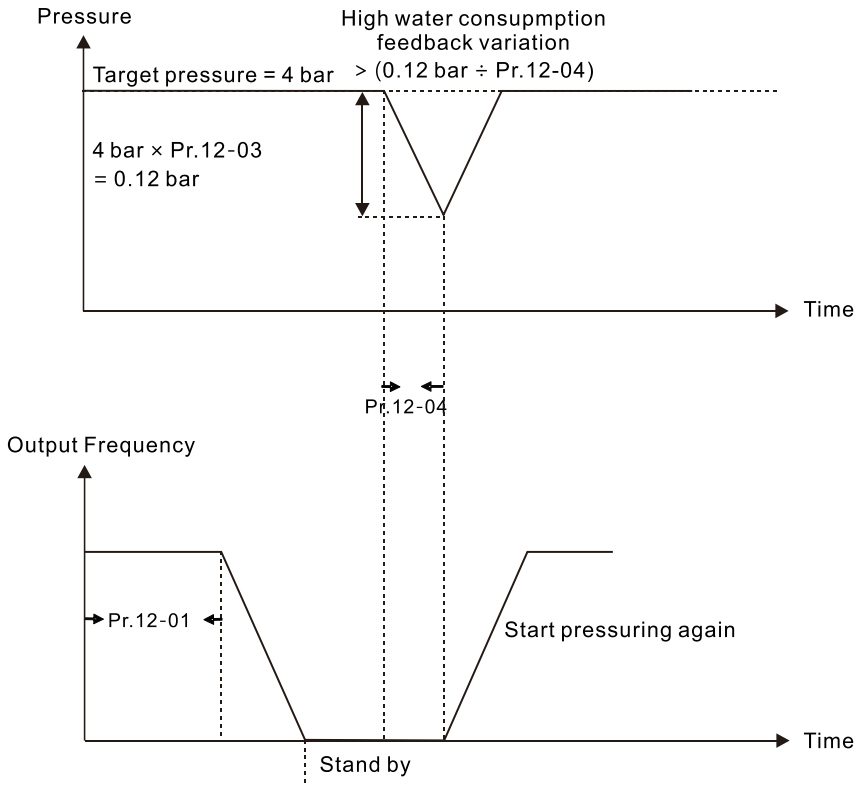

12-06 Color of LCD

Default: 0

Settings 0: Blue: running, MP300 is outputting frequency
Green: standby, MP300 powers ON without any errors
1: Blue: standby, MP300 powers ON without any errors
Green: running, MP300 is outputting frequency

12-07 Disallowed from Outputting

Default: 0

Settings 0: No function
1: PWM output is OFF (display a warning called NOut)

When building the system, using this parameter will make the motor (PWM) turn off outputting, to avoid malfunctioning during the test; a warning called NOut is generated when starting the function.

12-08 Frequency to Start Switching Pumps

Default: Max. operation frequency

Settings 0–the maximum operation frequency

12-09 Time Detected When Pump Reaches the Starting Frequency

Default: 1.0

Settings 0.0–3600.0 sec.

This parameter is valid for primary pump.

Refer to Pr.01-00 for maximum operation frequency.

Pump adding mechanism of multi-pump: When primary pump operation frequency ≥ Pr.12-08 and the time exceeds the setting in Pr.12-09, activate the next pump; if the water is still insufficient, activate the third, fourth pump according to the same conditions.

Pump reducing mechanism of multi-pump: The AC motor drive confirms the stable operation according to Pr.12-00 and Pr.12-01, and reduce pumps according to the deceleration time (Pr.01-15).

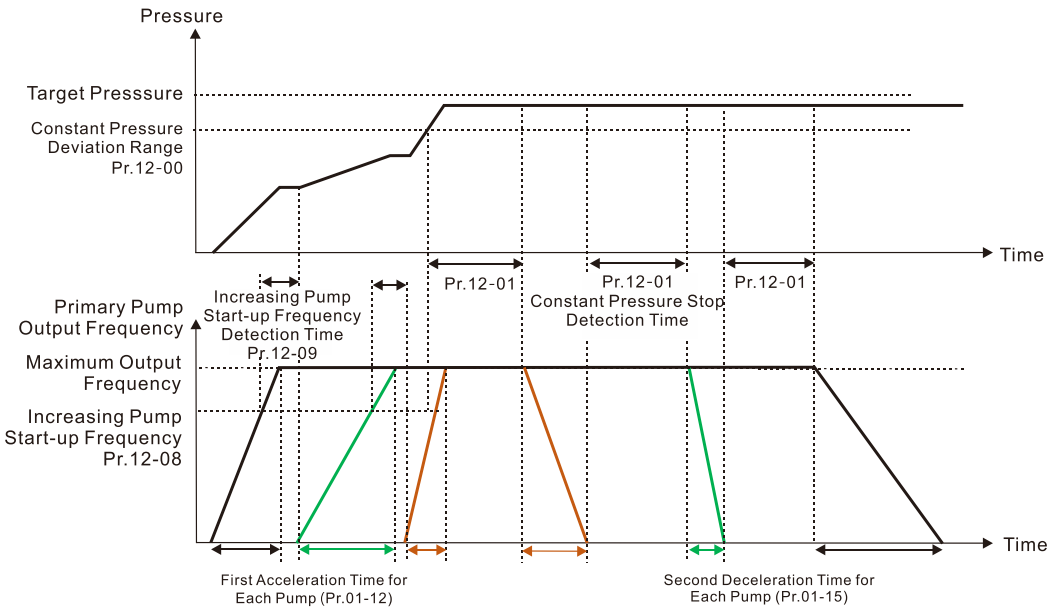

12-10 Pump Switching Stop Frequency

Default: 80.00

Settings 0.00~Maximum operation frequency (Pr.01-00) Hz

- This parameter is valid for primary pump.
- When the operation frequency of primary pump (pump 1) ≤ Pr.12-10, stop the first secondary pump (pump 2). If the primary pump still meets the requirements, stop pump 3, pump 4 in order, but not stop the primary pump.

12-12 Pump's Frequency at Time-Out (Disconnection)

Default: 0.00

Settings 0.00–599.00 Hz

- This parameter applies only to secondary pump(s).
- Refer to Pr.09-02 (COM1 transmission fault handling) and Pr.09-03 (COM1 time-out detection) for the communication failure conditions and fault handling.
- If a disconnection occurs in the multi-pump circumstances, the frequency command of secondary pump(s) is Pr.12-12; the secondary pump(s) is in standalone mode after STOP commend is given. Set the RUN command and operation frequency by the secondary pump parameters.
- The primary pump has the function to re-detect if a secondary pump is time-out.

12-13 Pump's Error Handling

Default: 1

Settings bit 0: When the operating pump is failed, whether it switches to an alternative pump or not.
0: Stop all pumps' action
1: Switch to an alternative pump
bit 1: During the operation, stop or standby after resetting from error.
0: Standby after resetting
1: Stop after resetting
bit 2: Before the operation, whether the system can run or not if the pump has an error.
0: The system cannot activate the operation
1: The system selects another pump to operate

- This parameter is valid for primary pump.
- If enable built-in PLC function, the value of the parameter is fixed on 1 (default).
- This parameter only works under auto mode. If the pump switches to manual mode by setting MIx = 97 (multi-pump manual / auto switch) or press STOP button on the keypad to be not controlled by multi-pump, then the parameter setting does not affect the pump.
- When a pump is failed in the multi-pump system, the primary pump deals with system behavior of during and before the operation and the operation of the failed pump according to this parameter setting.
- bit 0: When the operating pump is failed, whether it switches to an alternative pump or not.
  - bit 0 = 0: Stop all pumps
  - bit 0 = 1: Stop the failed pump, and select another pump to operate according to the principle

of activation.

- bit 1: During the operation, stop or standby after resetting from error.
  - bit 1 = 0, Standby: After resetting the failed pump, this pump can accept primary pump's command to operate.
  - bit 1 = 1, Stop: After resetting the failed pump, this pump cannot accept primary pump's command until restart the system.
- bit 2: Before the operation, whether the system can run or not if the pump has an error.
  - bit 2 = 0: Any pump of the system is failed, the primary pump cannot accept RUN command.
  - bit2 = 1: Any pump of the system is failed, the primary pump can accept RUN command, and select another pump to operate according to the principle of activation.

12-14 Selection of Pump Start-Up Sequence

Default: 1

Settings 0: According to the serial numbers of the pumps
1: According to the operating time

- 0: According to the serial numbers of the pumps (1 → 2 → 3 → 4 → 5 → 6 → 7 → 8 → 1).
- 1: According to the shortest operating time.

12-18 Cavitation Detection Method

Default: 0

Settings bit 0–3 00x0h: not using cavitation
00x1h: use AI1 to flow
00x2h: use flow estimation Q-H method
bit 4–7 000xh: no warning when cavitation
001xh: warning when cavitation, but continue operating

- Use this parameter to define the required flow whether is detected by flow meter or flow estimation Q-H method, refer to Pr.03-00 for more details.
- The AC motor drive displays Cavi warning when a cavitation is detected. To warn users that there is probably a cavitation occurred in the pipe, check and repair it early before it is malfunctioned.
- Refer to the table below, set the corresponding decimal value according to ON / OFF of cavitation and cavitation warning setting.

  Example: If you want the required flow detected by flow estimation Q-H method, and receive a waring when a cavitation occurred but the pump continues operating, then set Pr.12-18 = 18

Settings	000xh: no warning when cavitation	001xh: warning when cavitation, but continue operating
00x0h: not using cavitation	Hex: 0000h Decimal: 0	Hex: 0010h Decimal: 16
00x1h: use AI1 to flow	Hex: 0001h Decimal: 1	Hex: 011h Decimal: 17
00x2h: use flow estimation Q-H method	Hex: 0002h Decimal: 2	Hex: 0012h Decimal: 18

Read the information below by using Pr.00-04 and communication address:

Indication of cavitation status	User-defined (Pr.00-04)	Communication Address
0: Disable cavitation module: possible reasons are incorrect analog module setting (refer to the setting procedure below), low rotation speed. 1: Start detecting cavitation 2: Discover cavitation (the keypad displays cavitation warning if you select warning at this moment)	Pr.00-04 = 115	2273H

The setting procedure and related parameters of cavitation detection:

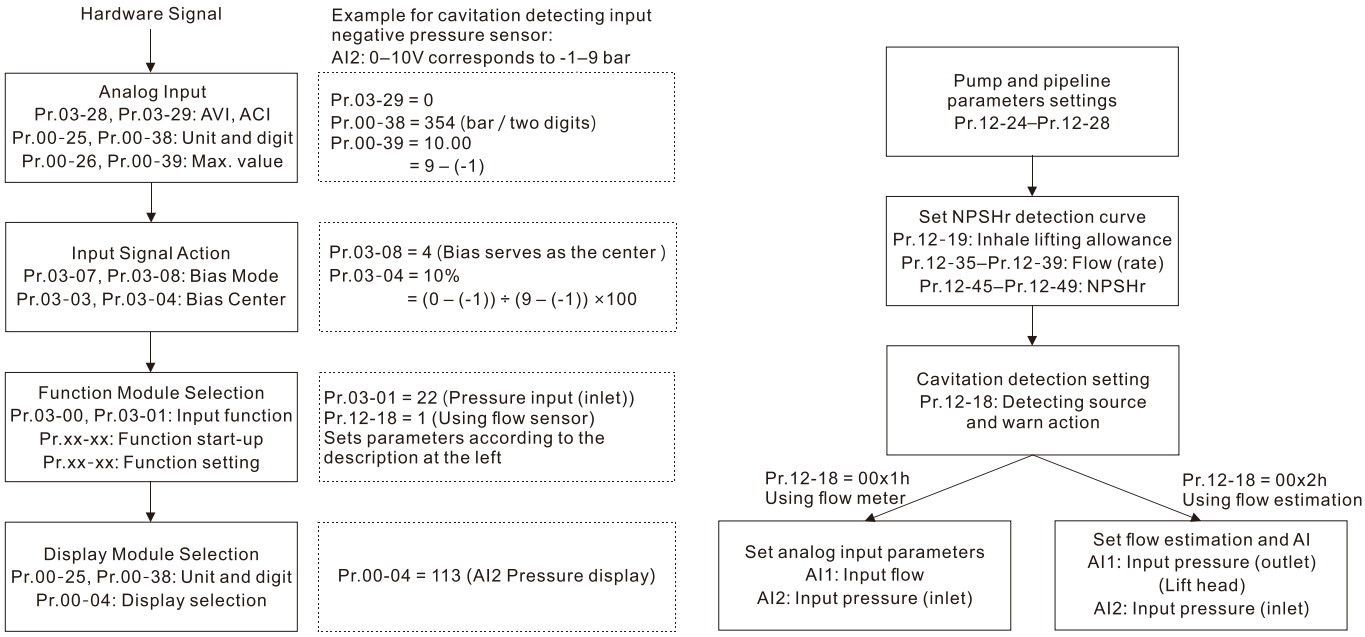

12-19 Cavitation Detection Tolerance

Default: 1.00

Settings 0.00–655.00

The larger the setting value is, the easier a cavitation warning occurs. This means that increase NPSHr value (Pr.12-45–12-49) can protect it in advance before a cavitation occurs.

12-20 Flow Estimation Method

Default: 1

Settings 0: Not using
1: Q-H method
2: P-Q method

Use these two flow estimation methods mentioned below can assist users to estimate the system flow without a flow meter.

1. Q-H method: Install two pressure sensors, one is at the inlet side and another one is at the outlet side, and set Pr.12-24–12-39.
2. P-Q method: Set Pr.12-24–12-26, Pr.12-35–12-44.

When using Q-H method, it's recommended that do not install any pressure reducing devices (e.g. non-return valve) between the pressure sensors and the pumps, because this will affect the

estimation accuracy. If there is any pressure reducing devices between the pumps and the pressure sensors, the deviation could be over 5% but differs from pressure reducing devices. The deviation caused by the pressure reducing devices can be adjusted by head point related parameters.

Read the information below by using Pr.00-04 and communication address:

	User-defined (Pr.00-04)	Communication Address
Estimated flow rate	Pr.00-04 = 112	2270H
Inlet pressure	Pr.00-04 = 113	2271H
Outlet pressure	Pr.00-04 = 114	2272H

The setting procedure and related parameters of flow estimation-Q-H method:

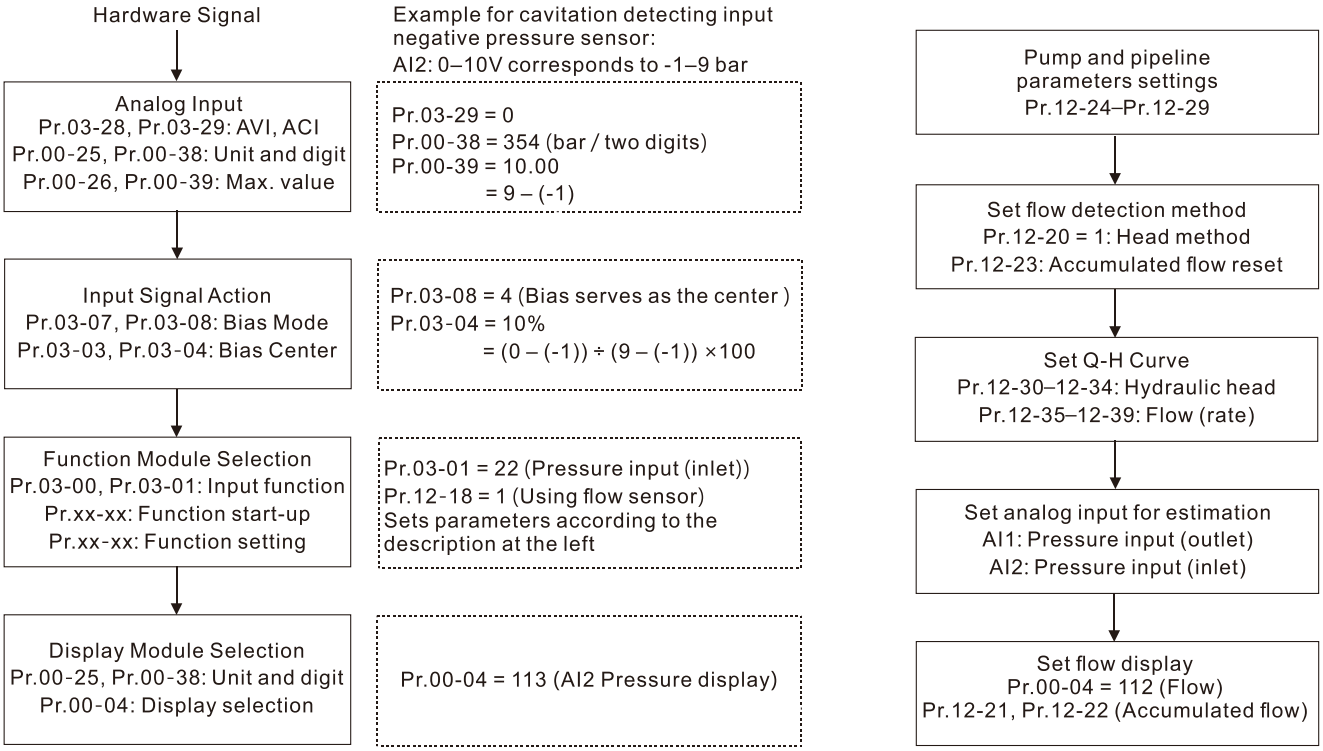

The setting procedure and related parameters of flow estimation-P-Q method:

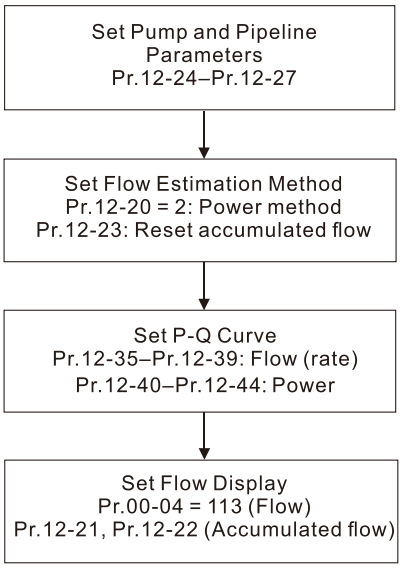

12-21 Accumulated Flow-Units Digit

Default: Read only

Settings 0–999.9 m^3 (read only)

12-22 Accumulated Flow-Thousands Digit

Default: Read only

Settings 0–65535 km^3 (read only)

- To execute flow estimation, you have to enable the flow estimation function and follow the instruction in Pr.12-20, the estimated accumulated flow displays in Pr.12-21 and Pr.12-22.
- Refer to Pr.12-23 for details if the accumulated flow has to being reset.

12-23 Reset Accumulated Flow Immediately

Default: 0

Settings 0: Not reset
1: When powering the AC motor drive on, reset volume flow
2: Reset volume flow

- This parameter memorizes the setting before powering off.
- Refer to Pr.12-21, 12-22 for the volume flow.
- 0: not reset, this means every time when activating the pump, the volume flow (Pr.12-21, Pr.12-22) is accumulated from the last time, and it stops accumulating while reaching the limit.

12-24 Diameter of the Pump Inlet
12-25 Diameter of the Pump Outlet

Default: 0.0

Settings 5.0–6500.0 mm

- The pipe diameter at the pressure sensor.
- If it does not install a pressure sensor, enter the pipe diameter of the pump inlet / outlet.

12-26 The Rated Rotation Speed of Pump

Default: 3000

Settings 0–65535 rpm

12-27 Fluid Density

Default: 995.7

Settings 0.0–6550.0 kg/m^3

- The density under the operation temperature for the fluid in pipe.

12-28 Fluid Temperature During Operation

Default: 30.00

Settings 00.00–600.00°C

12-29 Height Difference of Inlet / Outlet Pump Pressure Sensor

Default: 0.00

Settings -30.00–30.00 m

- The height difference is between the outlet and the inlet.

12-30	Pump Curve Head 1
12-31	Pump Curve Head 2
12-32	Pump Curve Head 3
12-33	Pump Curve Head 4
12-34	Pump Curve Head 5

Default: 0.00

Settings 0.00–655.00 m

12-35	Pump Curve Flow 1
12-36	Pump Curve Flow 2
12-37	Pump Curve Flow 3
12-38	Pump Curve Flow 4
12-39	Pump Curve Flow 5

Default: 0.00

Settings 0.00–655.00 m^3/hr

12-40	Pump Curve Point 1 Power
12-41	Pump Curve Point 2 Power
12-42	Pump Curve Point 3 Power
12-43	Pump Curve Point 4 Power
12-44	Pump Curve Point 5 Power

Default: 0.00

Settings 0.00–655.00 kW

12-45	Pump Curve 1 Npshr
12-46	Pump Curve 2 Npshr
12-47	Pump Curve 3 Npshr
12-48	Pump Curve 4 Npshr
12-49	Pump Curve 5 Npshr

Default: 0.00

Settings 0.00–655.00 m

- Refer to the chosen pump characteristic curve, select five points and ensure it includes the suggested working range of pump. See the table below for more about the functions and the related pump characteristic curves.
- Note: Pr.12-34 > Pr.12-33 > Pr.12-32 > Pr.12-31 > Pr.12-30, and set these parameters that starts from Pr.12-34 to Pr.12-30.

Functions	Pump characteristic curve	Flow (Pr.12-35–12-39)
Flow estimation Q-H method	Head (H) Pr.12-30–12-34	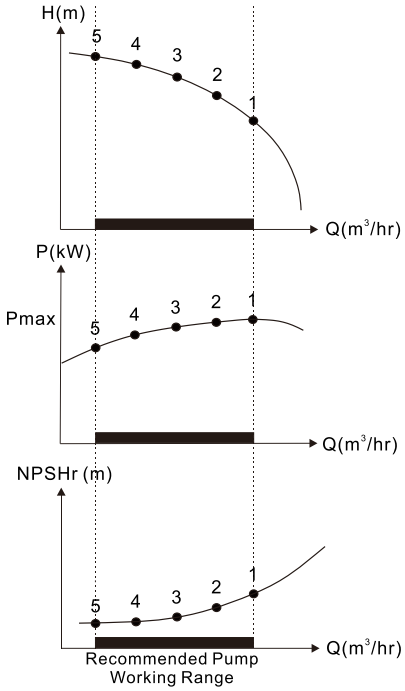
Flow estimation P-Q method	Power (P) Pr.12-40–12-44	
Cavitation detection	NPSHr Pr.12-45–12-49	

12-50 Cycle Time Selection

Default: 2

Settings 0: No function
1: Absolute time
2: Fixed time

12-51 Multi-pump's Real Time Circulation Period

Default: 00:00

Settings 00:00~23:59

12-52 Multi-pump's Fixed Time Circulation Period

Default: 5.0

Settings 0.0–3000.0 hours

- This parameter is valid for primary pump.
- Set cycle time in Pr.12-50, primary pump and secondary pump(s) switches when the absolute time is equal to Pr.12-51 or the operation time of primary pump is larger than Pr.12-52.
- If Pr.12-50 = 1, adjust RTC in Pr.12-93–12-96 before setting this parameter.

12-53 Clean Function

Default: 0

Settings 0: Disabled
1: Enabled (trigger the clean function when DI works)
2: Enabled (trigger the clean function when current exceeds stall current and the operation is restricted)
3: Enabled (trigger the clean function when the counting time is up)

- If Pr.00-23 = 1 or 2 (only single direction is allowed), the clean function cannot work.
- The clean function makes the pump runs in forward and reverse direction. Some pumps run in

single direction that the function does not support. Take notice of this, otherwise the pump breaks down.

- Three types of clean function:
  - Pr.12-53 = 1, 3: DI (set Mix = 100 synchronously) and scheduled trigger (set Pr.12-56, 12-57 synchronously) is for daily maintenance.
  - Pr.12-53 = 2: the clean function triggered by high stall current (set Pr.12-54, 12-55 synchronously) is for protection.
- The clean procedures are according to the setting of Pr.12-58–12-64.
- When Pr.12-53 = 3, adjust RTC in Pr.12-93–12-96 before setting this parameter.
- During the clean process, the AC motor drive displays CLE means the clean function is running. Return to the original control mode after finishing the clean. After finishing the clean process, which is triggered by stall current, if there is still stall current, the display shows a JAME fault and coasts to stop.

12-54 Stall Current Setting Value

Default: 120

Settings 0– the smallest one of Pr.06-03 and Pr.06-04

12-55 Stall Current Delay Time

Default: 60.0

Settings 0.0–300.0 sec.

- Trigger the clean function when the output current is larger than Pr.12-54 and continues for the time set in Pr.12-55. The AC motor drive displays CLE means the clean function is running. After finishing the clean process, if there is still stall current, the display shows a JAME fault and coasts to stop.

12-56 Auto Clean Day

Default: 0

Settings 0: Sunday
1: Monday
2: Tuesday
3: Wednesday
4: Thursday
5: Friday
6: Saturday

12-57 Cleaning Time of a Day

Default: 00:00

Settings 00:00~23:59

- Scheduled clean function is triggered by Pr.12-56 and Pr.12-57.
- Example: Pr.12-56 = 2, Pr.12-57 = 12:00

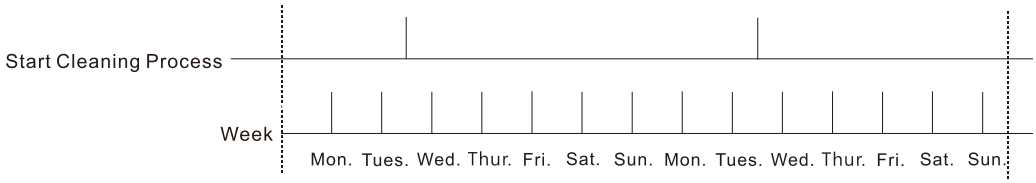

12-58 Cleaning Cycle Times

Default: 5

Settings 1–30

12-59 Clean Forward Frequency

Default: 40.00

Settings 0.00–50.00 Hz

12-60 Clean Forward Time

Default: 2.0

Settings 0.0–300.0 sec.

12-61 Clean Reverse Frequency

Default: 40.00

Settings 0.00–50.00 Hz

12-62 Clean Reverse Time

Default: 2.0

Settings 0.0–300.0 sec.

12-63 Cleaning Acceleration Time

Default: 1.0

Settings 1.0–300.0 sec.

12-64 Cleaning Deceleration Time

Default: 1.0

Settings 1.0–300.0 sec.

- The clean procedures below are according to the setting of Pr.12-58–12-64.
- If the AC motor drive is running or in acceleration / deceleration state while triggering the clean function, the clean function starts after it returns to 0 Hz.

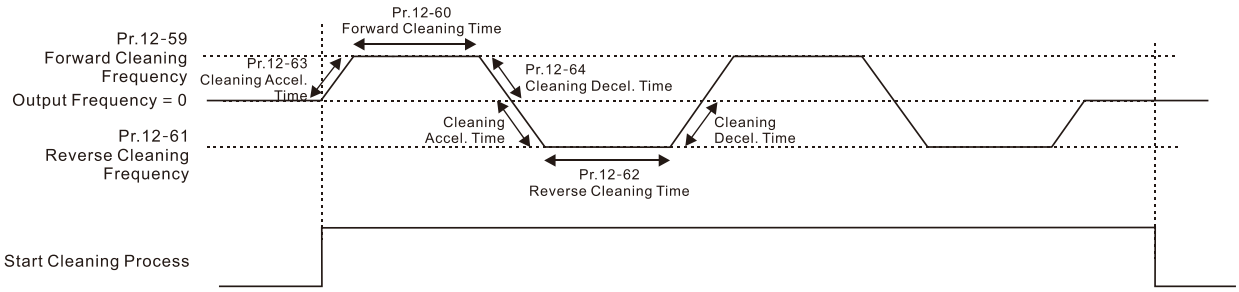

12-65 Load Auto-tuning Curve

Default: 0

Settings 0: Disabled
1: Enabled

- Set a state without water at the beginning, enable load auto-tuning curve (Pr.12-65 = 1) and press RUN button, and then the AC motor drive displays tUn to run to 50% and 100% of the rated frequency (Pr.01-01). Their output powers are recorded (see Pr.00-04 = 6 for output power) and enter into Pr.12-66, Pr.12-67.
- If there is a fault of the curve by auto-detection, the AC motor drive displays a dAUE warning to re-detect.

The range below the load curve is the area that dry pump occurs.

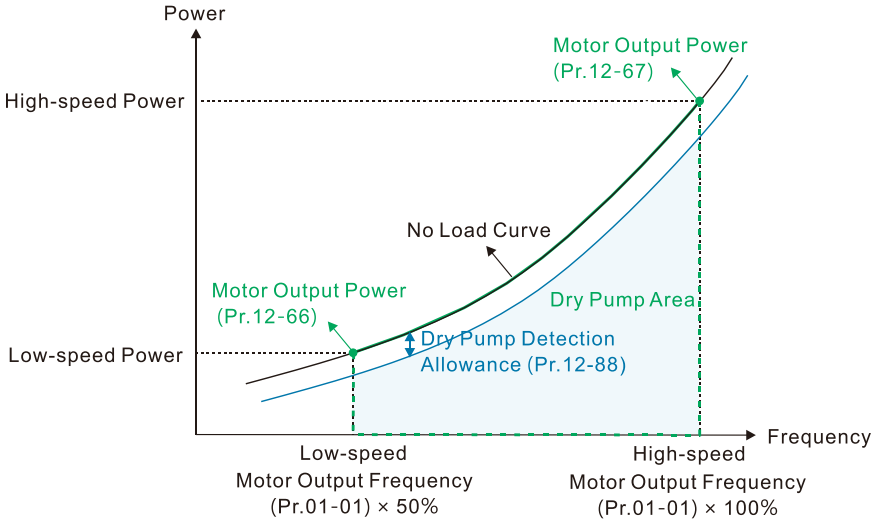

12-66 50% Power Consumption Point

Default: 0

Settings 0–65535 kW

12-67 100% Power Consumption Point

Default: 0

Settings 0–65535 kW

When Pr.12-65 = 1 enables load auto-tuning curve, the auto-tuning is according to the settings of Pr.12-66 and Pr.12-67.

12-68 Dry Pump Function

Default: 0

Settings 0: Disabled
1: Enabled

To learn load auto-tuning curve before enabling dry pump function.

12-69 Dry Pump Check Time

Default: 15.0

Settings 0–300.0 sec.

When the load is lower than the load curve and continues for the time set in Pr.12-69, a dryn warning occurs and handles this situation according to Pr.12-72.

12-70 Dry Pump Restart Delay Time

Default: 30

Settings 0–1000 min.

12-71 Number of Restart Times Limitation of Dry Pump

Default: 5

Settings 0–20

12-72 The Treatment of Dry Pump Fault

Default: 1

Settings 1: Fault and coast to stop
2: Fault and ramp to stop

- To check again if it's still in condition to trigger dry pump after passing the time set in Pr.12-70. If it's cleared, eliminate dryn warning to return to the original state; if it's not cleared, the dryn warning continues and waits for the next detection.
- If the restart times are over the setting of Pr.12-71, then a dryE fault occurs.

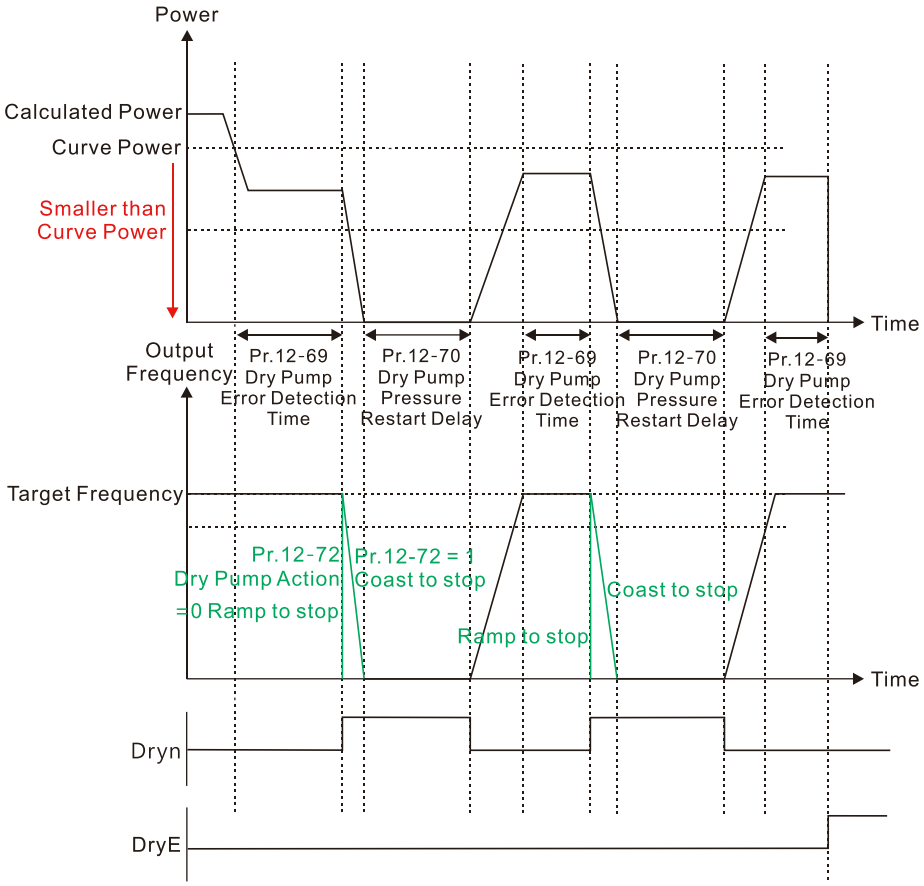

12-88 Dry Pump Detection Tolerance

Default: 10

Settings 0–50%

- This parameter determines the response speed of detecting dry pump, the larger the setting value is, the harder a dryn warning occurs; the smaller the setting value is, the easier a dryn warning occurs.
- Easy to trigger dry pump warning if water consumption is too low. Adjust this parameter to prevent from misinformation of dry pump.

12-73 Heavy Water Leakage Abnormal Pressure Detection

Default: 15

Settings 0: No function
0–50%

- The base of the parameter is the set point of PID control setting.
- This parameter is to set the gap between the pressure level of water leakage and the set point of PID control setting.

12-74 Heavy Water Leakage Abnormal Detection Time

Default: 15.0

Settings 0.1–300.0 sec.

12-75 Heavy Water Leakage Load Setting

Default: 20

Settings 0–100%

12-76 Heavy Water Leakage Treatment

Default: 0

Settings 0: Warn and continue operation
1: Fault and coast to stop
2: Fault and ramp to stop

If the feedback pressure is not higher than Pr.12-73 after passing the time set in Pr.12-74, and the output load is higher than Pr.12-75, then trigger heavy water leakage event. At the moment, the pump handles this situation according to Pr.12-76, and the AC motor drive displays a LEKn warning or a LEKE fault.

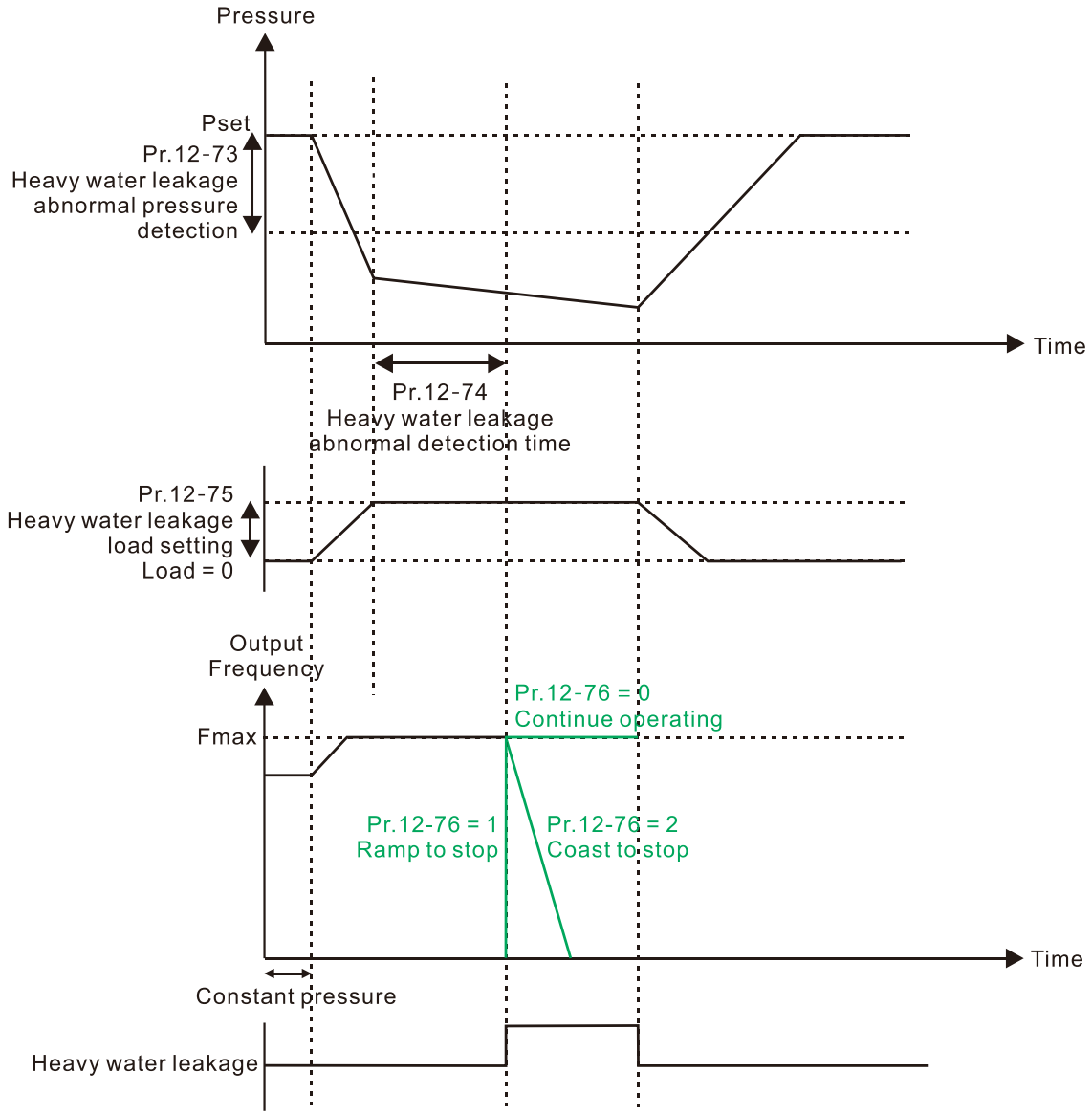

12-77 Sleep Boost Pressure Setting

Default: 0

Settings 0–50%

- The base of the parameter is the set point of PID control setting.
- When it's going to be constant pressure mode, you can increase the pressure (Pr.12-77) to reach the set point pressure (%) for increasing sleep time.

12-78 Sleep Boost Pressure Delay Time

Default: 10.0

Settings 0.0–600.0 sec.

- If the pump has still not reached the sleep boost pressure after passing the time set in Pr.12-78, then it returns to the normal control state.

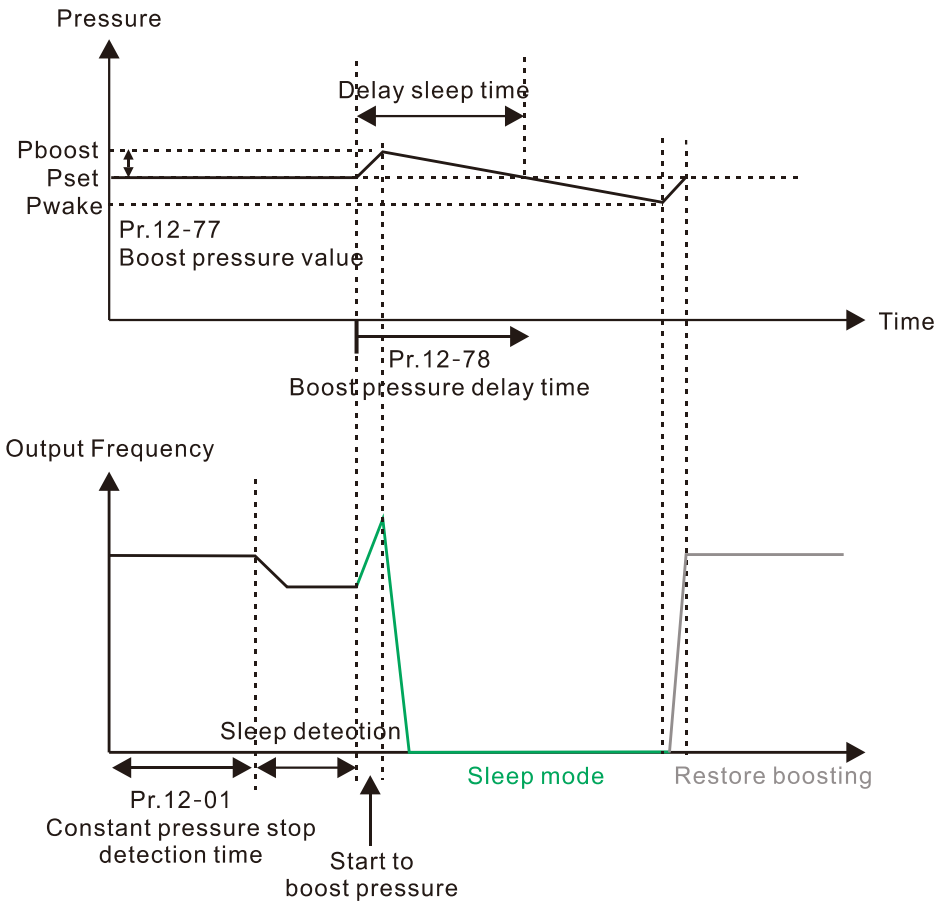

12-79 Level of High Pressure Alarm

Default: 25

Settings 0: No function

0–50%

- The base of the parameter is the set point of PID control setting.

12-80 High Pressure Time Delay

Default: 5.0

Settings 0.1–300.0 sec.

12-81 High Pressure Alarm Treatment

Default: 1

Settings 1: Fault and coast to stop
2: Fault and ramp to stop

If the feedback pressure is higher than Pr.12-79 after passing the time set in Pr.12-80, then a HiPE fault occurs according to Pr.12-81.

12-82 Level of Low Pressure Alarm

Default: 25

Settings 0: No function
0–50%

The base of the parameter is the set point of PID control setting.

12-83 Low Pressure Time Delay

Default: 5.0

Settings 0.1–300.0 sec.

12-84 Low Pressure Alarm Treatment

Default: 1

Settings 0: Warn and continue operation
1: Fault and coast to stop
2: Fault and ramp to stop

If the feedback pressure is higher than Pr.12-82 after passing the time set in Pr.12-83, then a LoPn waring or a LoPE fault occurs according to Pr.12-84.

12-93 Year Setting

Default: 2022

Settings 2022–2099

12-94 Date Setting

Default: 1.01

Settings 1.01–12.31

12-95 Time Setting

Default: 00:00

Settings 00:00~23:59

12-96 Week Setting

Default: 0

Settings 0: Sunday
1: Monday
2: Tuesday
3: Wednesday
4: Thursday
5: Friday
6: Saturday

Install a battery before using RTC function, refer to section 7-7 for more details about the installation.

📖 Set Pr.12-93–12-96 first to ensure time accuracy for using RTC related functions, such as Pr.12-50 =1 (cycle time selection), Pr.12-53 = 3 (clean function), and Pr.04-58 (weekdays, weekend, specific day schedule).

13 Macro / User-defined Macro

13-00 Macro Selection

Default:00

Settings	00: Disabled
	01: User-defined

Note: After you select the macro, some of the default values adjust automatically according to the application selection.

13-01 – 13-50 Application Parameters (User-defined)

Refer to Chapter 10 for the setting methods of the user-defined parameters.

[This page intentionally left blank]

14 Protection Parameters (2)

You can set this parameter during operation.

14-50	Output Frequency at Malfunction 2
14-54	Output Frequency at Malfunction 3
14-58	Output Frequency at Malfunction 4
14-62	Output Frequency at Malfunction 5
14-66	Output Frequency at Malfunction 6

Default: Read only

Settings 0.00–599.00 Hz

When an error occurs, you can check the output frequency for the malfunction. If the error happens again, this parameter overwrites the previous record.

14-51	DC bus Voltage at Malfunction 2
14-55	DC bus Voltage at Malfunction 3
14-59	DC bus Voltage at Malfunction 4
14-63	DC bus Voltage at Malfunction 5
14-67	DC bus Voltage at Malfunction 6

Default: Read only

Display 0.0–6553.5 V

When an error occurs, you can check the DC bus voltage for the malfunction. If the error happens again, this parameter overwrites the previous record.

14-52	Output Current at Malfunction 2
14-56	Output Current at Malfunction 3
14-60	Output Current at Malfunction 4
14-64	Output Current at Malfunction 5
14-68	Output Current at Malfunction 6

Default: Read only

Display 0.00–655.35 Amps

When an error occurs, you can check the output current for the malfunction. If the error happens again, this parameter overwrites the previous record.

14-53	IGBT Temperature at Malfunction 2
14-57	IGBT Temperature at Malfunction 3
14-61	IGBT Temperature at Malfunction 4
14-65	IGBT Temperature at Malfunction 5
14-69	IGBT Temperature at Malfunction 6

Default: Read only

Display -3276.8–3276.7 °C

When an error occurs, you can check the IGBT temperature for the malfunction. If the error happens again, this parameter overwrites the previous record.

14-70	Fault Record 7
14-71	Fault Record 8
14-72	Fault Record 9
14-73	Fault Record 10

Default: 0

Display

0: No fault record

1: Over-current during acceleration (ocA)

2: Over-current during deceleration (ocd)

3: Over-current during steady operation (ocn)

4: Ground fault (GFF)

6: Over-current at stop (ocS)

7: Over-voltage during acceleration (ovA)

8: Over-voltage during deceleration (ovd)

9: Over-voltage during constant speed (ovn)

10: Over-voltage at stop (ovS)

11: Low-voltage during acceleration (LvA)

12: Low-voltage during deceleration (Lvd)

13: Low-voltage at constant speed (Lvn)

14: Low-voltage at stop (LvS)

15: Phase loss protection (orP)

16: IGBT overheating (oH1)

17: Heatsink overheating (oH2)

18: IGBT temperature detection failure (tH1o)

19: Capacitor hardware error (tH2o)

21: Over load (oL)

22: Electronics thermal relay 1 protection (EoL1)

24: Motor overheating PTC-130 / KTY-84-130 (oH3)

26: Over torque 1 (ot1)

28: Under current (uC)

31: EEPROM read error (cF2)

33: U-phase error (cd1)

34: V-phase error (cd2)

35: W-phase error (cd3)

36: cc hardware error (Hd0)

37: oc hardware error (Hd1)

40: Auto-tuning error (AUE)

41: PID loss ACI (AFE)

48: ACI loss (ACE)

49: External fault (EF)

51: External base block (bb)

52: Password is locked (Pcod)
54: Illegal command (CE1)
55: Illegal data address (CE2)
56: Illegal data value (CE3)
57: Data is written to read-only address (CE4)
58: Modbus transmission time-out (CE10)
74: Fire mode output (Fire)
79: U-phase over-current before run (Aoc)
80: V-phase over-current before run (boc)
81: W-phase over-current before run (coc)
82: U-phase output phase loss (oPL1)
83: V-phase output phase loss (oPL2)
84: W-phase output phase loss (oPL3)
87: Low frequency overload protection (oL3)
89: Rotor position detection error (roPd)
90: Force to stop (FStp)
140: oc hardware error (Hd6)
141: GFF occurs before run (b4GFF)
142: Auto-tune error 1 (AuE1) (DC test stage)
143: Auto-tune error 2 (AuE2) (high frequency stall stage)
144: Auto-tune error 3 (AuE3) (rotation test stage)
221: High water pressure (HPS)
222: Low water pressure (LPSE)
223: Dry pump (dryE)
224: Water leaking (pipe explosion) (LEKE)
225: Clogged pipe (JAME)
226: RTC error (rtF)
227: Dry pump curve auto-measuring (dAUE)

📖 The system records the fault codes to Pr.06-17–06-22, Pr.14-70–14-73 as long as the fault is forced to stop.

📖 When low-voltage at stop fault (LvS) occurs, the fault is not recorded. When low-voltage during operation faults (LvA, Lvd, Lvn) occur, the faults are recorded.

[This page intentionally left blank]

12-2 Adjustment & Application

12-2-1 Water pump system related parameters:

For different water pump systems (single pump, multi-pump, multi-master), users can follow the procedures below to set up the related parameters. Refer to section 12-1 for more details about parameter settings.

- Multi-master: sets by the built-in PLC function that goes with the parameters in the drive.

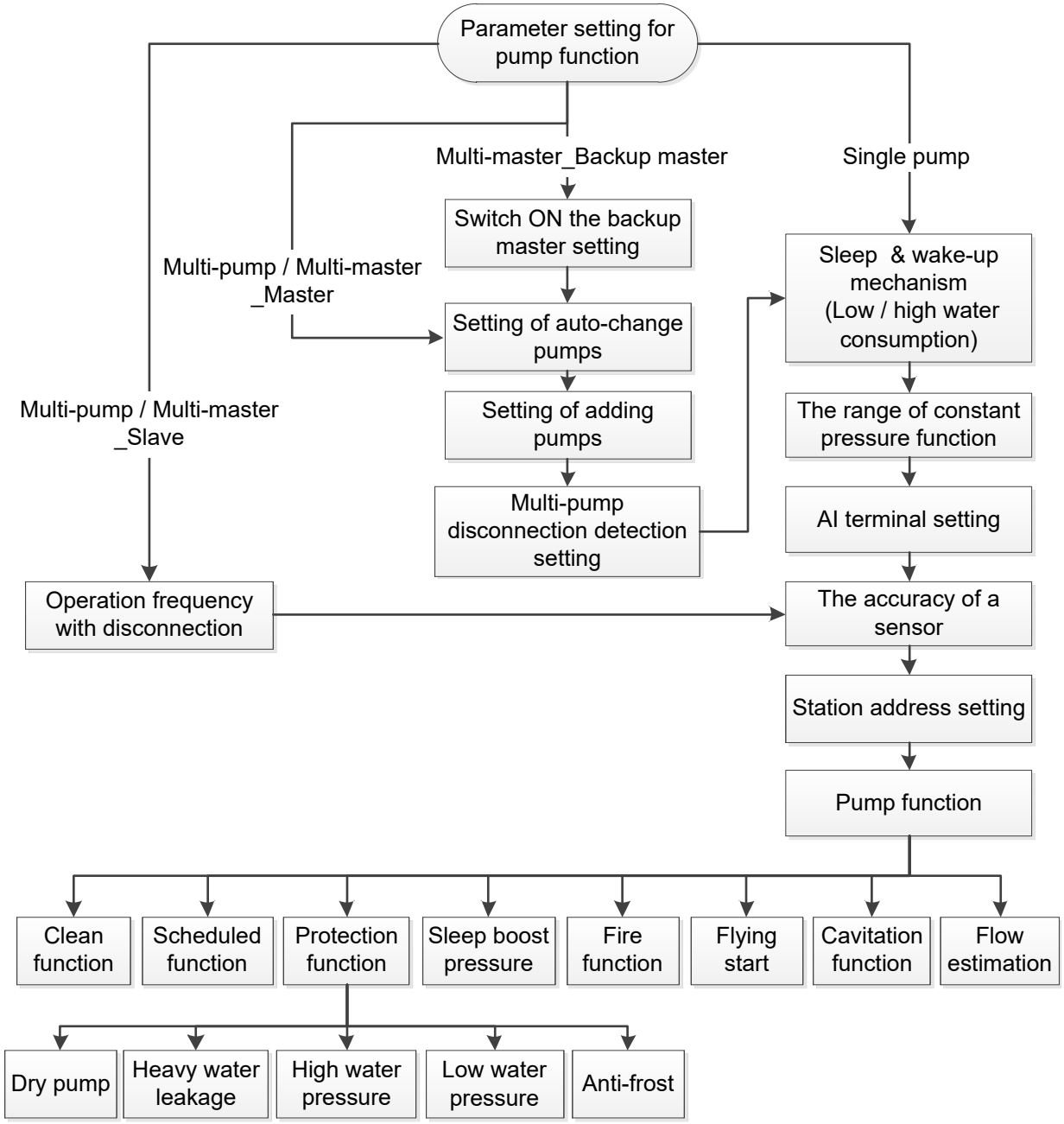

Note: All the AC motor drives should enable PLC1 for using multi-master function.

Single-pump parameters

☑ The default pressure sensor sets as 4–20 mA, the unit is bar.

☑ Set the maximum value of pressure sensor in Pr.00-26.

☑ The mark " * " represents the parameters must be set and confirmed.

- The station address of master pump

Pr.	Parameter Name	Default
09-00*	Communication Address	1
09-31*	COM1 Internal Communication Protocol	0

Multi-master: Pr.09-31 = -12 (PLC auto-setting), Pr.09-00 = 1

- AI terminal setting

Pr.	Parameter Name	Default
03-00	AI1 Analog Input Selection	5
03-28*	AI1 Terminal Input Selection	2

- Precision of sensor

Pr.	Parameter Name	Default
00-25*	User-Defined Characteristics	353
00-26*	Maximum User-Defined Value	0

- Set point level

Pr.	Parameter Name	Default
12-00*	Set Point Deviation Level	0
12-01	Detection Time of Set Point Deviation Level	10

- Wake-up function (low / high water consumption)

Pr.	Parameter Name	Default
12-02	Offset Level of Low Water Consumption	10
12-03	Offset Level of High water Consumption	0
12-04	High Water Consumption Delay Time	0.5

Master of multi-pump / backup master parameters

☑ The default pressure sensor sets as 4–20 mA, the unit is bar.

☑ Set the maximum value of pressure sensor in Pr.00-26.

☑ The mark " * " represents the parameters must be set and confirmed.

☑ After enabling the water pump function, the default enables auto-change function (starts up from the pump has the shortest operation time, and alternates every 5 hours), pump-adding function.

- The station address of master pump

Pr.	Parameter Name	Default
09-00*	Communication Address	1
09-31*	COM1 Internal Communication Protocol	0

Multi-master: Pr.09-31 = -12 (PLC auto-setting), Pr.09-00 = 1

- AI terminal setting

Pr.	Parameter Name	Default
03-00	AI1 Analog Input Selection	5
03-28*	AI1 Terminal Input Selection	2

- Precision of sensor

Pr.	Parameter Name	Default
00-25*	User-Defined Characteristics	353
00-26*	Maximum User-Defined Value	0

- Set point level

Pr.	Parameter Name	Default
12-00*	Set Point Deviation Level	0
12-01	Detection Time of Set Point Deviation Level	10

- Wake-up function (low / high water consumption)

Pr.	Parameter Name	Default
12-02	Offset Level of Low Water Consumption	10
12-03	Offset Level of High water Consumption	0
12-04	High Water Consumption Delay Time	0.5

- Auto-change pump setting

Pr.	Parameter Name	Default
12-14	Selection of pump start-up sequence	1
12-50	Cycle Time Selection	2
12-51	Multi-pump's Real Time Circulation Period	00:00
12-52	Multi-pump's Fixed Time Circulation Period	5.0

- Adding pump setting

Pr.	Parameter Name	Default
12-14	Selection of pump start-up sequence	1
12-08	Frequency to Start Switching Pumps	FMAX

Pr.	Parameter Name	Default
12-09	Time Detected When Pump Reaches The Starting Frequency	1.0

- Reducing pump setting

Pr.	Parameter Name	Default
12-00	Set Point Deviation Level	0
12-01	Detection Time of Set Point Deviation Level	10
12-10	Pump Switching Stop Frequency	80

- Multi-pump COM1 time-out detection

Pr.	Parameter Name	Default
09-02	COM1 Transmission Fault Treatment	3
09-03	COM1 Time-out Detection	0.0

- Treatment of pump disconnection

Pr.	Parameter Name	Default
12-13	Pump's Error Handling	1

Multi-master: Pr.12-13 fixes to 1.

- Pump System Configuration Setting

Pr.	Parameter Name	Default
04-57	Pump System Configuration Setting	0

This parameter is to set the multi-pump configuration of the built-in PLC function. Refer to user manual for more details.

Backup master: Pr.04-57 bit8 = 1

Slave of multi-pump parameters

- Enable constant pressure function

Pr.	Parameter Name	Default
12-00*	Set Point Deviation Level	0
12-01	Detection Time of Set Point Deviation Level	10

Same setting as the master pump.

- Station address of slave pump

Pr.	Parameter Name	Default
09-00*	Communication Address	1
09-31*	COM1 Internal Communication Protocol	0

Multi-master: Pr.09-31 = 0 (PLC auto-setting), Pr.09-00 should set station address to be 2–8

- Precision of pressure sensor

Pr.	Parameter Name	Default
00-25*	User-Defined Characteristics	353
00-26*	Maximum User-Defined Value	0

- Operation frequency of disconnected pump

Pr.	Parameter Name	Default
12-12	Pump's Frequency at Time-Out (Disconnection)	0.00

Water pump function parameters

☑ The default enables heavy water leakage related function.

- Dry pump

Pr.	Parameter Name	Default
12-65	Load Auto-tuning Curve	0
12-66	50% Power Consumption	0
12-67	85% Power Consumption	0
12-68	Dry Pump Function	0
12-69	Dry Pump Check Time	15.0
12-70	Dry Pump Restart Delay Time	30
12-71	Number of Restart Times Limitation of Dry Pump	5
12-72	The Treatment of Dry Pump Fault	1

- Flying start

Pr.	Parameter Name	Default
07-06	Restart After Momentary Power Loss	0
07-07	Allowed Power Loss Duration	2.0
07-08	Base Block Time	0.5
07-09	Current Limit of Speed Tracking	100
07-10	Restart after Fault	0
07-11	Number of Times of Restart After Fault	0
07-12	Speed Tracking During Start-up	0
06-88	Operation Times in Fire Mode	Read only

- Level of High Pressure Alarm

Pr.	Parameter Name	Default
12-79	Level Of High Pressure Alarm	25
12-80	High Pressure Time Delay	5.0
12-81	Level Of High Pressure Alarm	1

When Pr.12-79 = 0, disables high water pressure alarm.

- Level of Low Pressure Alarm

Pr.	Parameter Name	Default
12-82	Level Of Low Pressure Alarm (%)	25
12-83	Low Pressure Time Delay	5.0
12-84	Level of Low Pressure Alarm	0

When Pr.12-82 = 0, disables low water pressure alarm.

- Clean Function

Pr.	Parameter Name	Default
12-53	Clean Function	0
12-54	Stall Current Setting Value	120
12-55	Stall Current Delay Time	60.0
12-56	Auto Clean Day	0
12-57	Cleaning Time of A Day	00:00
12-58	Cleaning Cycle Times	5
12-59	Clean Forward Frequency	40.00
12-60	Clean Forward Time	2.0
12-61	Clean Reverse Frequency	40.00
12-62	Clean Reverse Time	2.0
12-63	Cleaning Acceleration Time	1.0
12-64	Cleaning Deceleration Time	1.0
02-01–02-04	Multi-function Input Command (MI1–MI4)	0

📖 Pr.02-01–02-04: sets 100 to enable clean function by external trigger

📖 If you need to use the timer clean trigger, sets the RTC (Pr.12-93–12-96) and install battery (section 7-7).

📖 Refer to Pr.12-53 for more details.

- Fire Mode

Pr.	Parameter Name	Default
06-80	Fire Mode	0
06-81	Operating Frequency in Fire Mode (Hz)	150.00

- Anti-frost function

Pr.	Parameter Name	Default
02-72	Preheating DC current level	0
02-73	Preheating DC Current Duty Cycle	0
02-01–02-04	Multi-function Input Command (MI1–MI4)	0
02-13–2-14, 02-16	Multi-function Output	0

Pr.02-01–02-04: set as 69 to enable preheating function.

Pr.02-13, 02-14, 02-16: set 69 to enable the indication of multi-pump system error.

- Sleep boost pressure function

Pr.	Parameter Name	Default
12-77	Sleep Boost Pressure Setting	0
12-78	Sleep Boost Pressure Delay Time	10.0

- Heavy Water Leakage

Pr.	Parameter Name	Default
12-73	Heavy Water Leakage Abnormal Pressure Detection	15

Pr.	Parameter Name	Default
12-74	Heavy Water Leakage Abnormal Detection Time	15.0
12-75	Heavy Water Leakage Load Setting	20.0
12-76	Heavy Water Leakage Treatment	0

When Pr.12-73 = 0, disables heavy water leakage alarm.

- Scheduled function (enables the built-in PLC function before using this function)

Pr.	Parameter Name	Default
04-58	Weekdays, Weekend, Specific Day Schedule	0
04-59	Weekend Setting	0
04-60	Duty Day Start Time 1	0
04-61	Duty Day Set Point Pressure 1	00:00
04-62	Duty Day Start Time 2	0
04-63	Duty Day Set Point Pressure 2	00:00
04-64	Duty Day Start Time 3	0
04-65	Duty Day Set Point Pressure 3	00:00
04-66	Duty Day Start Time 4	0
04-67	Duty Day Set Point Pressure 4	00:00
04-68	Duty Day Start Time 5	0
04-69	Duty Day Set Point Pressure 5	00:00
04-70	Weekend Start Time 1	0
04-71	Weekend Set Point Pressure 1	00:00
04-72	Weekend Start Time 2	0
04-73	Weekend Set Point Pressure 2	00:00
04-74	Weekend Start Time 3	0
04-75	Weekend Set Point Pressure 3	00:00
04-76	Weekend Start Time 4	0
04-77	Weekend Set Point Pressure 4	00:00
04-78	Weekend Start Time 5	0
04-79	Weekend Set Point Pressure 5	00:00
04-80	Specific Date Start Date 1	00.00
04-81	Specific Day End Date 1	00.00
04-82	Specific Date Start Date 2	00.00
04-83	Specific Day End Date 2	00.00
04-84	Specific Date Start Date 3	00.00
04-85	Specific Day End Date 3	00.00
04-86	Specific Date Start Date 4	00.00
04-87	Specific Day End Date 4	00.00
04-88	Specific Date Start Date 5	00.00
04-89	Specific Day End Date 5	00.00
04-90	Specific Date Start Time 1	00:00

Pr.	Parameter Name	Default
04-91	Specific Date Set Point Pressure 1	0
04-92	Specific Date Start Time 2	00:00
04-93	Specific Date Set Point Pressure 2	0
04-94	Specific Date Start Time 3	00:00
04-95	Specific Date Set Point Pressure 3	0
04-96	Specific Date Start Time 4	00:00
04-97	Specific Date Set Point Pressure 4	0
04-98	Specific Date Start Time 5	00:00
04-99	Specific Date Set Point Pressure 5	0

📖 Before using scheduled function, sets the RTC (Pr.12-93–12-96) and install battery (section 7-7).

📖 Refer to Pr.04-58 for more details.

- Flow estimation P-Q method

Pr.	Parameter Name	Default
12-20	Flow Estimation Method	1
12-21	Accumulated Flow-Units Digit (m^3)	Read only
12-22	Accumulated Flow-Thousands Digit (km^3)	Read only
12-23	Reset accumulated flow immediately	0
12-24	Diameter of the Pump Inlet (mm)	0.0
12-25	Diameter of the Pump Outlet (mm)	0.0
12-26	The Rated Rotation Speed of Pump	3000
12-35	Pump Curve Flow 1	0
12-36	Pump Curve Flow 2	0
12-37	Pump Curve Flow 3	0
12-38	Pump Curve Flow 4	0
12-39	Pump Curve Flow 5	0
12-40	Pump Curve Point 1 Power	0
12-41	Pump Curve Point 2 Power	0
12-42	Pump Curve Point 3 Power	0
12-43	Pump Curve Point 4 Power	0
12-44	Pump Curve Point 5 Power	0

📖 Refer to Pr.12-20 for more details.

- Flow estimation Q-H method

Pr.	Parameter Name	Default
12-20	Flow Estimation Method	1
12-21	Accumulated Flow-Units Digit (m^3)	Read only
12-22	Accumulated Flow-Thousands Digit (km^3)	Read only
12-23	Reset accumulated flow immediately	0
12-24	Diameter of the Pump Inlet (mm)	0.0

Pr.	Parameter Name	Default
12-25	Diameter of the Pump Outlet (mm)	0.0
12-26	The Rated Rotation Speed of Pump	3000
12-27	Fluid Density	995.7
12-28	Fluid Temperature During Operation (ºC)	30.00
12-29	Height Difference of Inlet / Outlet Pump Pressure Sensor	0
12-30	Pump Curve Head 1	0
12-31	Pump Curve Head 2	0
12-32	Pump Curve Head 3	0
12-33	Pump Curve Head 4	0
12-34	Pump Curve Head 5	0
12-35	Pump Curve Flow 1	0
12-36	Pump Curve Flow 2	0
12-37	Pump Curve Flow 3	0
12-38	Pump Curve Flow 4	0
12-39	Pump Curve Flow 5	0

📖 Before using this method, user has to set outlet / inlet pressure sensor related parameters.

📖 Refer to Pr.12-20 for more details.

- Cavitation detection

Pr.	Parameter Name	Default
12-18	Cavitation Detection Method	0
12-19	Cavitation Detection Tolerance	0
12-24	Diameter of The Pump Inlet	0.0
12-25	Diameter of The Pump Outlet	0.0
12-26	The Rated Rotation Speed of Pump	3000
12-27	Fluid Density	995.7
12-28	Fluid Temperature During Operation (ºC)	30.00
12-35	Pump Curve Flow 1	0
12-36	Pump Curve Flow 2	0
12-37	Pump Curve Flow 3	0
12-38	Pump Curve Flow 4	0
12-39	Pump Curve Flow 5	0
12-45	Pump Curve Npshr 1	0
12-46	Pump Curve Npshr 2	0
12-47	Pump Curve Npshr 3	0
12-48	Pump Curve Npshr 4	0
12-49	Pump Curve Npshr 5	0

📖 Refer to Pr.12-20 for more details.

12-2-2 Induction Motor VF Control Adjustment Procedure (IMVF Sensorless, Pr.00-11 = 0)

- Control diagram

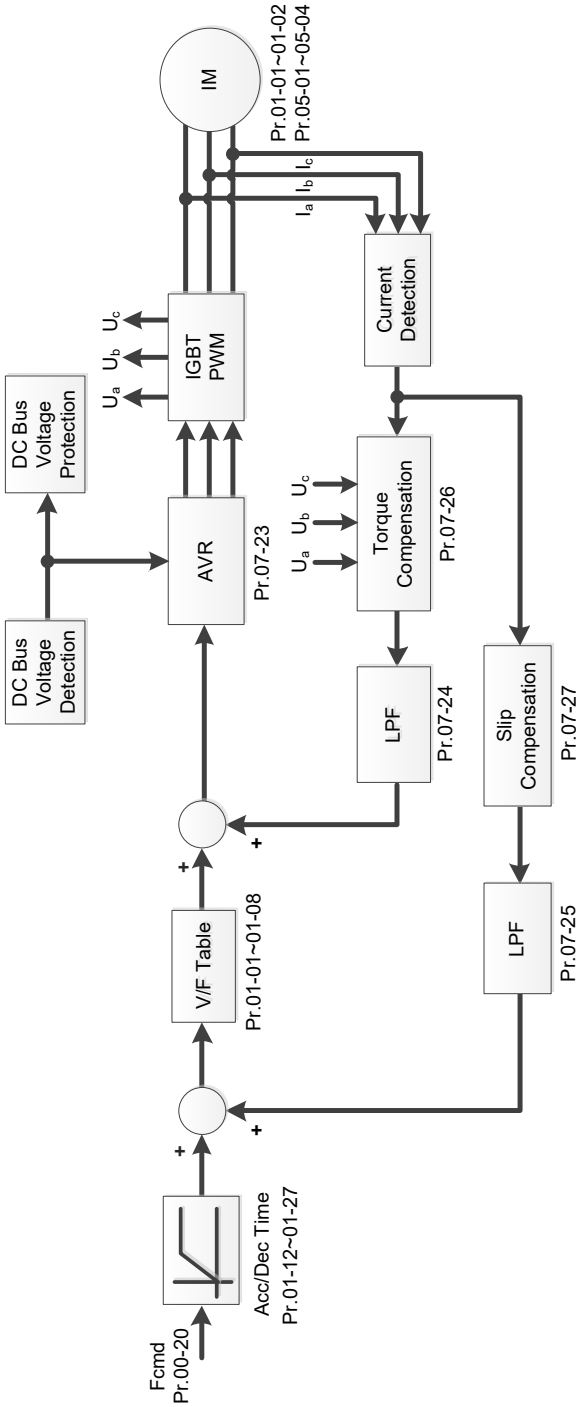

- Adjustment procedure

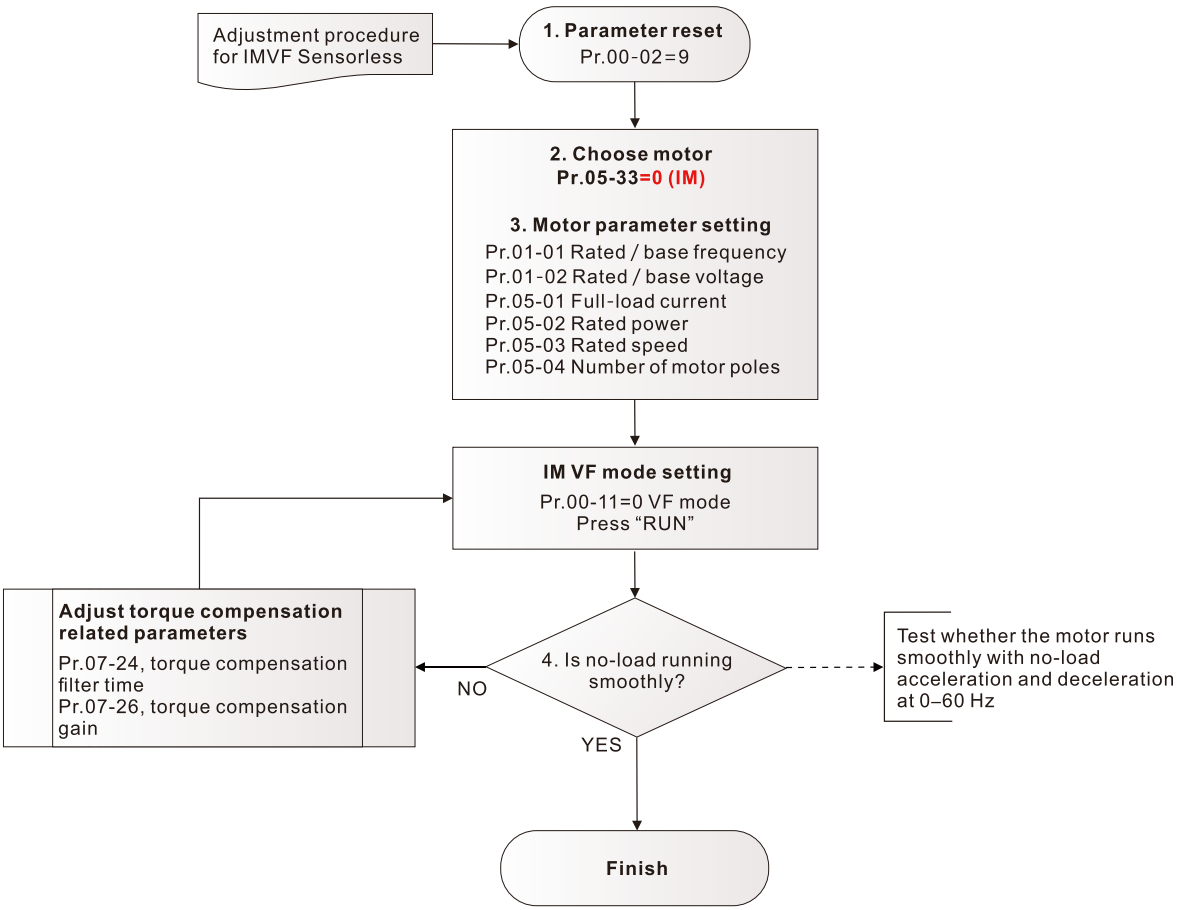

📖 Basic motor parameter adjustment

1. Parameter reset

   Pr.00-02 = 9, reset to be the default of IM.

2. Select IM motor type

   Pr.05-33 = 0 (IM)

3. Motor nameplate parameter setting

Parameter	Description
Pr.01-01	Motor 1 Rated / Base Frequency
Pr.01-02	Motor 1 Rated / Base Voltage
Pr.05-01	Full-Load Current for Induction Motor 1 (A)
Pr.05-02	Rated Power for Induction Motor 1 (kW)
Pr.05-03	Rated Speed for Induction Motor 1 (rpm)
Pr.05-04	Number of Poles for Induction Motor 1 (poles)

4. If the motor is shaking or not smooth after start-up, then adjust the setting of torque compensation related parameters.

   📖 Pr.07-24, torque command filter time (when the time constant setting is too small, the response is faster but the control may be unstable.

   📖 Pr.07-26, torque compensation gain (set this parameter higher when the no-load current is too large. But the motor may vibrate if the setting is too high. If the motor shakes when operating, reduce the setting.)

- IMVF Sensorless related parameters

Refer to Section 12-1 Description of Parameter Settings for more details.

Parameter	Description	Unit	Default	Setting Range
00-11	Speed Control Mode	N/A	0	0, 2
01-01	Motor 1 Rated / Base Frequency	Hz	60.00 / 50.00	0.00–599.00
01-02	Motor 1 Rated / Base Voltage	V	Depend on the model power	Depend on the model power
05-02	Rated Power for Induction Motor 1	kW	Depend on the model power	0.00–655.35
05-03	Rated Speed for Induction Motor 1	rpm	Depend on the motor's number of poles	0–xxxx (Depend on the motor's number of poles)
05-04	Number of Poles for Induction Motor 1	N/A	4	2–64
07-24	Torque Command Filter Time	sec.	0.5	0.001–10.000
07-26	Torque Compensation Gain	N/A	0	0–10
07-25	Slip Compensation Filter Time	sec.	0.1	0.001–10.000
07-27	Slip Compensation Gain	N/A	000	0.00–10.00

12-2-3 Permanent-Magnet Synchronous Motor, Space Vector Control Adjustment Procedure (PM SVC, Pr.00-11 = 2)

- Control diagram

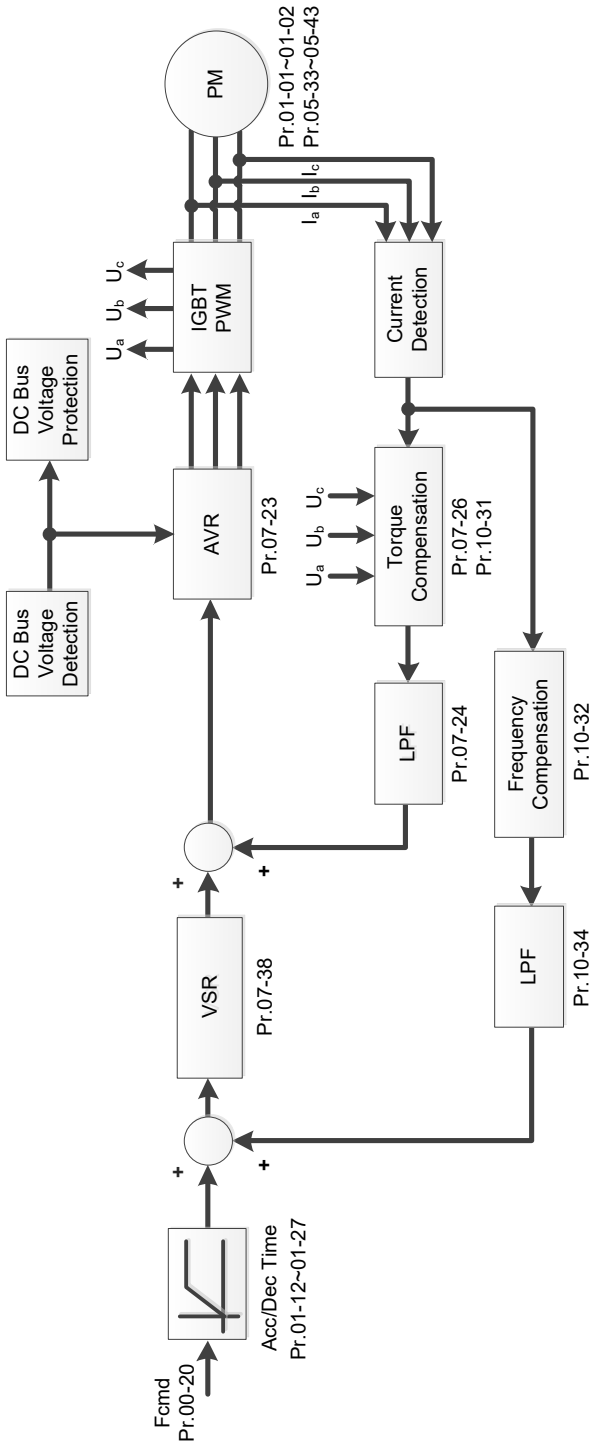

- PM SVC adjustment procedure

  (NOTE: The number marked on the procedure corresponds to the number of following adjustment explanations)

  (1) PM SVC motor parameters adjustment flowchart

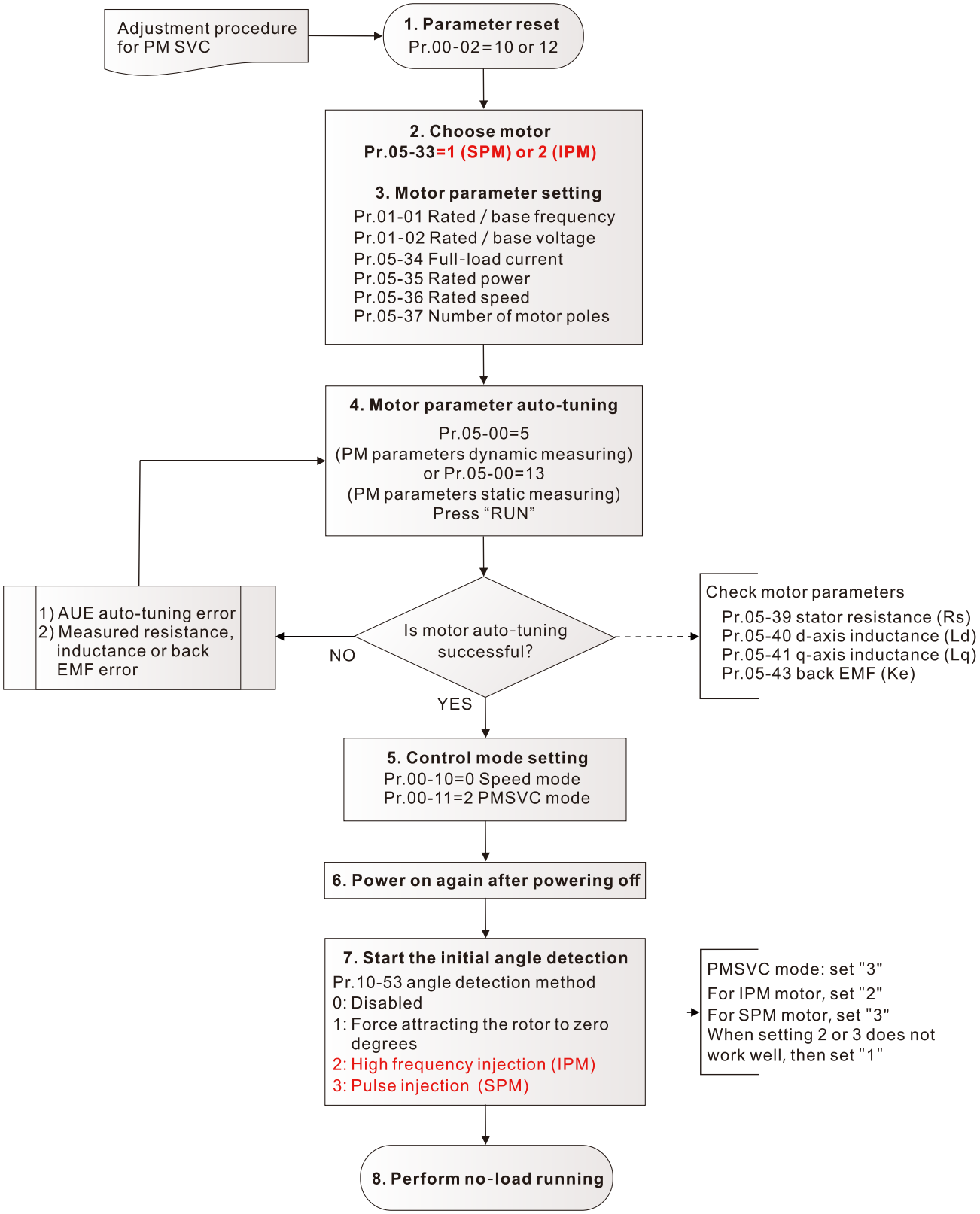

Basic motor parameter adjustment

1. Parameter reset

   Pr.00-02 = 10 or 12, reset the parameter to the default.

2. Select PM motor type:

   Pr.05-33 = 1 (SPM) or 2 (IPM)

3. Motor nameplate parameter setting

Parameter	Description
Pr.01-01	Motor 1 Rated / Base Frequency
Pr.01-02	Motor 1 Rated / Base Voltage
Pr.05-34	Motor Full-load Current (A)
Pr.05-35	Motor Rated Power (kW)
Pr.05-36	Motor Rated Speed (rpm)
Pr.05-37	Number of Poles in the Motor (poles)

4. PM parameter auto-tuning:

   Set Pr.05-00 = 5 (rolling auto-tuning for PM, with no load) or 13 (static auto-tuning for PM) and press RUN key to finish motor auto-tuning, then you will get the following parameters:

Parameter	Description
Pr.05-39	Stator Resistance For A Motor (Ω)
Pr.05-40	Motor Ld (mH)
Pr.05-41	Motor Lq (mH)
Pr.05-43	Ke parameter of a permanent magnet motor ($V_{phase\ \cdot\ rms}$ / krpm) (When Pr.05-00 = 5, the Ke parameter is measured based on the actual motor rotation.) (When Pr.05-00 = 13, the Ke parameter is automatically calculated based on the motor power, current and rotor speed.)

   If an auto-tuning error (AUE) occurs, refer to Chapter 14 “Fault Codes and Descriptions” for further treatment.

AUE Error (code)	Description
AUE (40)	Motor auto-tuning error
AUE 1 (142)	Auto-tuning error 1 (No feedback current error)
AUE 2 (143)	Auto-tuning error 2 (Motor phase loss error)

5. Set control mode

   Control mode for the motor: Pr. 00-11 = 2: PM SVC mode

6. Power ON again after power OFF.

7. Measure the initial magnetic pole angle of PM.

   Set Pr.10-53 PM initial rotor position detection method:

   0: Disabled

   1: Force attracting the rotor to zero degrees

   2: High frequency injection (for IPM)

3: Pulse injection (for SPM / IPM)

* For IPM, the setting value is suggested to be 2; for SPM, the setting value is suggested to be 3. You can choose the setting 1 if the result is not good of setting as 2 or 3.

(2) PM SVC adjustment flowchart for operation with no load / light load

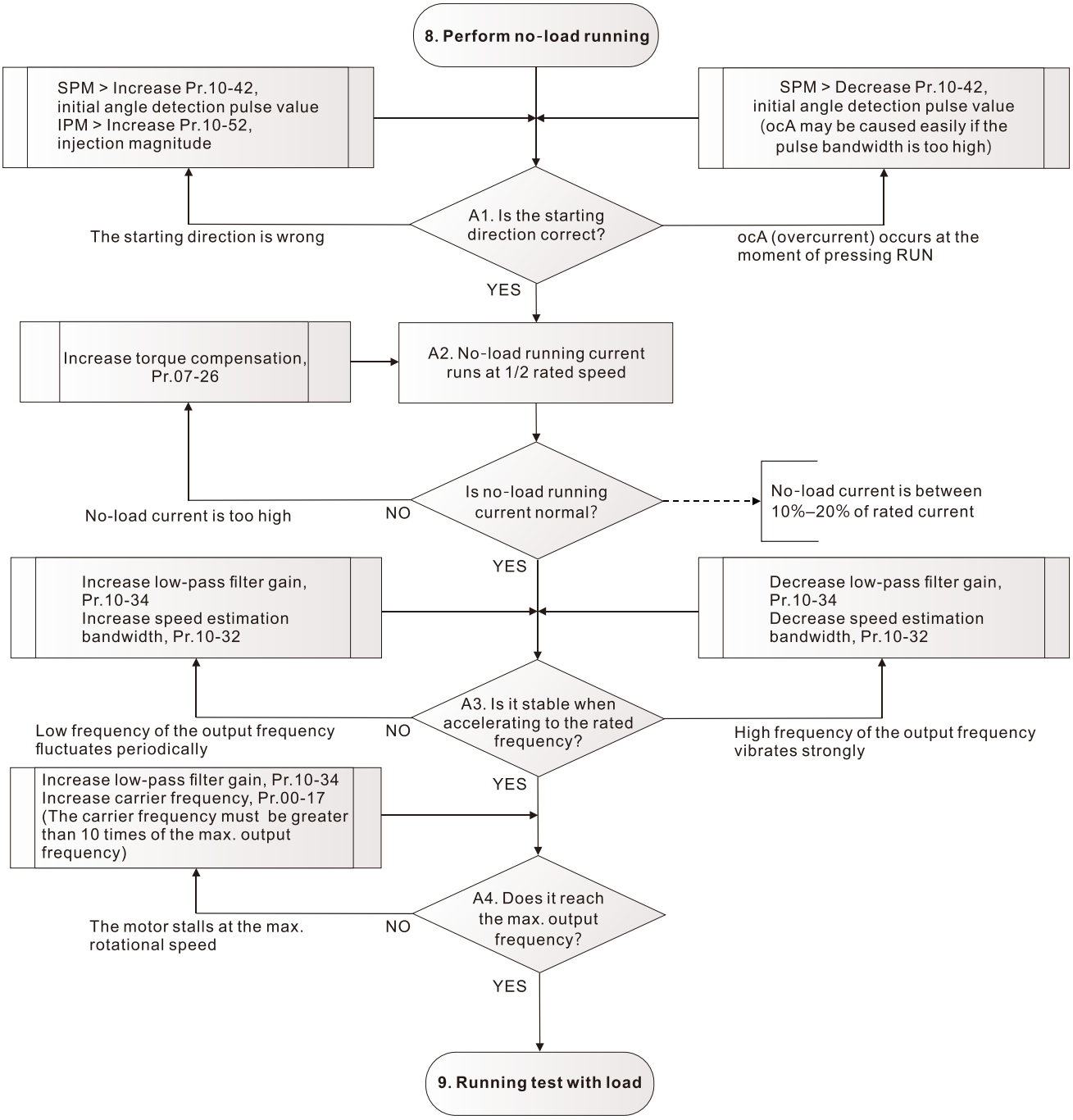

📖 Adjustment for operation with light load

8. Start the motor without load / with light load and operate to 1/2 of the rated rotor speed

A1. Start operation direction:

a. If the start operation direction is wrong

When Pr.10-53 = 3, increase the current proportion for Pr.10-42 (initial angle detection pulse value) to improve the accuracy of the angle detection.

When Pr.10-53 = 2, increase the voltage for Pr.10-52 (injection magnitude) to improve the accuracy of the angle detection.

b. If an ocA error occurs when pressing RUN to start the motor, decrease the current proportion for Pr.10-42 (initial angle detection pulse value).

A2. Operates the motor in 1/2 of the rated rotor speed, adjust the no-load operating current

If the no-load operating current exceeds 20% of the rated current, increase Pr.07-26 (torque compensation gain) and observe the no-load operating current.

A3. Accelerate to the rated frequency and observe if the motor operates stably.

a. If the motor output rotor speed presents periodic low-frequency wave, increase Pr.10-34 (PM sensorless speed estimator low-pass filter gain), or increase Pr.10-32 (PM FOC sensorless speed estimator bandwidth).
b. If the output frequency reflects high frequency vibration, decrease Pr.10-34 or decrease Pr.10-32.

A4. Accelerate the motor to the maximum rotor speed, and observe if it operates stably. If the motor stalls when accelerating to the maximum rotor speed, then increase Pr.10-34 (PM sensorless speed estimator low-pass filter gain), or increase Pr.00-17 (carrier frequency, you must set the carrier frequency larger than 10 times of the maximum output frequency)

(3) PM SVC adjustment flowchart for operation starts with load

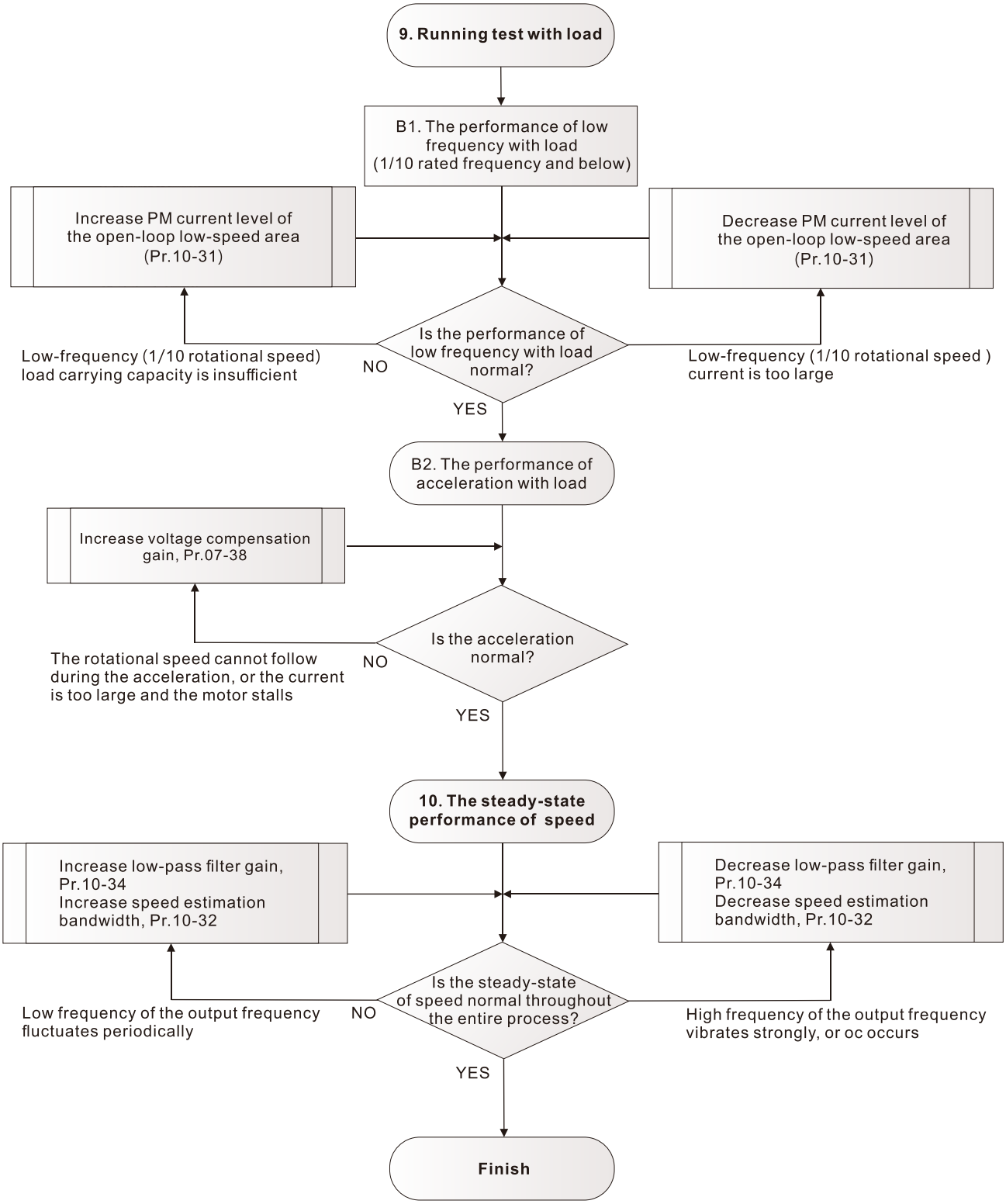

📖 Adjustment for operation with load

9. Load operating test

B1. Low-frequency loading performance is below 1/10 of rated frequency:

a. If the low-frequency loading performance is insufficient, or the rotor speed is not smooth, increase Pr.10-31 (current command of I/F mode).

b. If the low-frequency current is large, decrease Pr.10-31 (current command of I/F mode).

B2. Test the with-load accelerating performance:

When the motor operates in 1/10 of rotor speed and above, if the speed cannot follow the acceleration time during accelerating, or the current stalls, increase Pr.07-38 (PMSVC voltage feedback forward gain).

10. Stability test at constant speed operation: the motor operates stably at constant speed

a. If the motor output rotor speed presents periodic low-frequency wave, increase Pr.10-34 (PM sensorless speed estimator low-pass filter gain), or increase Pr.10-32 (PM FOC sensorless speed estimator bandwidth).

b. If the output frequency reflects high frequency vibration, decrease Pr.10-34 or decrease Pr.10-32.

- PM SVC related parameters

Refer to Section 12-1 Description of Parameter Settings for more details.

Parameter	Description	Unit	Default	Settings
Pr.07-24	Torque Command Filter Time	sec.	0.050	0.001–10.000
Pr.07-26	Torque Compensation Gain	N/A	0	0–5000
Pr.10-31	MSI motor control current compensation command	%	40	0–150
Pr.10-32	Speed Estimator Bandwidth	Hz	5.00	0.00–600.00
Pr.10-34	Speed Estimator Low-pass Filter Gain	N/A	1.00	0.00–655.35
Pr.10-39	MSI Motor Control Current Compensation Frequency Point	Hz	20.00	0.00–599.00
Initial Angle Estimating Parameters				
Pr.10-42	Initial Angle Detection Pulse Value	N/A	1.0	0.0–3.0
Pr.10-51	Injection Frequency (when Pr.10-53 = 2)	Hz	500	0–1200
Pr.10-52	Injection Magnitude (when Pr.10-53 = 2)	V	30.0	0.0–200.0
Pr.10-53	Angle Detection Method 0: Disabled 1: Force attracting the rotor to zero degrees 2: High frequency injection 3: Pulse injection	N/A	0	0–3

Chapter 13 Warning Codes

Summary of Warning Codes

ID No.	Warning Name	ID No.	Warning Name
0	No record	71	ExCom power loss (ECLv)
1	Communication error 1 (CE1)	72	ExCom test mode (ECtt)
2	Communication error 2 (CE2)	73	ExCom BUS off (ECbF)
3	Communication error 3 (CE3)	74	ExCom no power (ECnP)
4	Communication error 4 (CE4)	75	ExCom factory defect (ECFF)
5	Communication error 10 (CE10)	76	ExCom inner error (ECiF)
9	IGBT overheating warning (oH1)	78	ExCom Parameter data error (ECPP)
11	PID feedback error (PID)	79	ExCom configuration data error (ECPi)
12	ACI analog signal loss (AnL)	80	Ethernet link fail (ECEF)
13	Under current (uC)	81	Communication time-out (ECto)
20	Over-torque 1 (ot1)	82	Checksum error (ECCS)
22	Motor overheating (oH3)	83	Return defect (ECrF)
	PTC-130 / KTY-84-130	84	Modbus TCP over (Eco0)
24	Over slip warning (oSL)	85	Modbus TCP over (ECo1)
25	Auto tuning (tUn)	86	IP fail (ECiP)
28	Output phase loss (OPHL)	87	Mail fail (EC3F)
33	No output (NOut)	88	ExCom busy (ECbY)
50	PLC opposite defect (PLod)	89	ExCom card break (ECCb)
51	PLC save memory error (PLSv)	91	Copy PLC: Read mode error (CPL0)
52	Data defect (PLdA)	92	Copy PLC: Write mode (CPL1)
53	Function defect (PLFn)	98	Fire mode output (Fire)
54	PLC buffer overflow (PLor)	101	InrCOM time-out (ictn)
55	Function defect (PLFF)	134	Battery low voltage (LBAt)
56	Checksum error (PLSn)	135	Perpetual calendar adjustment (rCAL)
57	No end command (PLEd)	222	Low water pressure (LPSn)
58	PLC MCR error (PLCr)	223	Dry pump (dryn)
59	PLC download fail (PLdF)	224	Heavy water leakage (LEKn)
60	PLC scan time fail (PLSF)	225	Cavitation (CAvi)
70	ExCom ID fail (ECid)		

ID No.	Display on LED Keypad	Warning Name	Description
1	CE1	Communication error 1 (CE1)	RS-485 Modbus illegal function code

Action and Reset	
Action condition	When the function code is not 03, 06, 10 and 63.
Action time	Immediately act
Warning setting parameter	N/A
Reset method	“Warning” occurs when Pr.09-02 = 0 and the motor drive keeps running. The drive resets automatically when receiving the correct function code.
Reset condition	Immediately reset
Record	N/A

Cause	Corrective Actions
Incorrect communication command from upper unit	Check if the communication command is correct.
Malfunction caused by interference	Verify the wiring and grounding of the communication circuit. It is recommended to separate the communication circuit from the main circuit, or wire in 90 degrees for effective anti-interference performance.
Different communication setting from the upper unit	Check if the setting for Pr.09-01, Pr.09-04 are the same as the setting for the upper unit.
Disconnection or bad connection of the cable	Check the cable and replace it if necessary.

ID No.	Display on LED Keypad	Warning Name	Description
2	CE2	Communication error 2 (CE2)	RS-485 Modbus illegal data address (00H–254H)

Action and Reset	
Action condition	When the input data address is incorrect.
Action time	Immediately act
Warning setting parameter	No function
Reset method	“Warning” occurs when Pr.09-02 = 0 and the motor drive keeps running. The drive resets automatically when receiving the correct data address.
Reset condition	Immediately reset
Record	N/A
Cause	**Corrective Actions**
Incorrect communication command from upper unit	Check if the communication command is correct.
Malfunction caused by interference	Verify the wiring and grounding of the communication circuit. It is recommended to separate the communication circuit from the main circuit, or wire in 90 degrees for effective anti-interference performance.
Different communication setting from the upper unit	Check if the setting for Pr.09-01, Pr.09-04 are the same as the setting for the upper unit.
Disconnection or bad connection of the cable	Check the cable and replace it if necessary.

ID No.	Display on LED Keypad	Warning Name	Description
3	CE3	Communication error 3 (CE3)	RS-485 Modbus illegal data value

Action and Reset	
Action condition	When the length of communication data is too long.
Action time	Immediately act
Warning setting parameter	No function
Reset method	“Warning” occurs when Pr.09-02=0 and the motor drive keeps running. The drive resets automatically when receiving the correct communication data value.
Reset condition	Immediately reset
Record	N/A
Cause	**Corrective Actions**
Incorrect communication command from upper unit	Check if the communication command is correct.
Malfunction caused by interference	Verify the wiring and grounding of the communication circuit. It is recommended to separate the communication circuit from the main circuit, or wire in 90 degrees for effective anti-interference performance.
Different communication setting from the upper unit	Check if the setting for Pr.09-01, Pr.09-04 are the same as the setting for the upper unit.
Disconnection or bad connection of the cable	Check the cable and replace it if necessary.

ID No.	Display on LED Keypad	Warning Name	Description
4	CE4	Communication error 4 (CE4)	RS-485 Modbus data is written to read-only address

Action and Reset	
Action condition	When the data is written to read-only address.
Action time	Immediately act
Warning setting parameter	No function
Reset method	“Warning” occurs when Pr.09-02=0 and the motor drive keeps running. The drive resets automatically when receiving the correct written address of communication data.
Reset condition	Immediately reset
Record	N/A
Cause	**Corrective Actions**
Incorrect communication command from upper unit	Check if the communication command is correct.
Malfunction caused by interference	Verify the wiring and grounding of the communication circuit. It is recommended to separate the communication circuit from the main circuit, or wire in 90 degrees for effective anti-interference performance.
Different communication setting from the upper unit	Check if the setting for Pr.09-01, Pr.09-04 are the same as the setting for the upper unit.
Disconnection or bad connection of the cable	Check the cable and replace it if necessary.

ID No.	Display on LED Keypad	Warning Name	Description
5	CE 10	Communication error 10 (CE10)	RS-485 Modbus transmission time-out

Action and Reset	
Action condition	When the communication time exceeds the detection time for Pr.09-33 communication time-out.
Action time	Pr.09-03
Warning setting parameter	No function
Reset method	“Warning” occurs when Pr.09-02=0 and the motor drive keeps running. The drive resets automatically when receiving the next communication packet.
Reset condition	Immediately reset
Record	N/A

Cause	Corrective Actions
The upper unit does not transmit the communication command within Pr.09-03 setting time.	Check if the upper unit transmits the communication command within the setting time for Pr.09-03.
Malfunction caused by interference	Verify the wiring and grounding of the communication circuit. It is recommended to separate the communication circuit from the main circuit, or wire in 90 degrees for effective anti-interference performance.
Different communication setting from the upper unit	Check if the setting for Pr.09-02 is the same as the setting for the upper unit.
Disconnection or bad connection of the cable	Check the cable and replace it if necessary.

ID No.	Display on LED Keypad	Warning Name	Description
9	oH1	IGBT over-heating warning (oH1)	The AC motor drive detects over-heating of IGBT, and over the protection level of oH1 warning. (When Pr.06-15 is higher than the IGBT over-heating level, the drive shows oH1 error without displaying oH1 warning.)

Action and Reset	
Action condition	Pr.06-15
Action time	“oH1” warning occurs when IGBT temperature is higher than Pr.06-15 setting value.
Warning setting parameter	No function
Reset method	Auto-reset
Reset condition	The drive auto-resets when IGBT temperature is lower than oH1 warning level minus (–) 5°C.
Record	N/A
Cause	**Corrective Actions**
Check if the ambient temperature or temperature inside the cabinet is too high, or if there is obstruction in the ventilation hole of the control cabinet.	1. Check the ambient temperature. 2. Regularly inspect the ventilation hole of the control cabinet. 3. Change the installed place if there are heating objects, such as brake resistors, in the surroundings. 4. Install / add cooling a fan or air conditioner to lower the temperature inside the cabinet.
Check if there is any obstruction on the heat sink or if the fan is running.	Remove the obstruction or replace the cooling fan.
Insufficient ventilation space	Increase ventilation space of the drive.
Check if the drive matches the corresponded loading.	1. Decrease the load. 2. Decrease the carrier wave. 3. Replace with a drive with larger capacity.
The drive has run 100% or more than 100% of the rated output for a long time.	Replace with a drive with larger capacity.

ID No.	Display on LED Keypad	Warning Name	Description
11	P 10	PID feedback error (PID)	PID feedback loss (A warning for analog feedback signal; it works only when PID enables)
Action and Reset			
Action condition		When the analog input is lower than 4 mA (only detects analog input 4–20 mA).	
Action time		Pr.08-08	
Warning setting parameter		Pr.08-09 0: Warn and continue operation 1: Fault and ramp to stop 2: Fault and coast to stop 3: Warn and operate at last frequency	
Reset method		Auto	“Warning” occurs when Pr.08-09 = 0 or 3. The “Warning” automatically clears when the feedback signal is larger than 4 mA.
		Manual	“Error” occurs when Pr.08-09 = 1 or 2. You must reset manually.
Reset condition		Immediately reset	
Record		Records when Pr.08-09 = 1 or 2 (“Error”). Does not record when Pr.08-09 = 0 or 3 (“Warning”).	
Cause		Corrective Actions	
Loose or broken PID feedback wiring		Tighten the terminals again. Replace with a new cable.	
Feedback device malfunction		Replace with a new feedback device.	
Hardware error		If the PID error still occurs after checking all the wiring, return to the factory for repair.	

ID No.	Display on LED Keypad	Warning Name	Description
12	AnL	ACI analog signal loss (AnL)	Analog input current loss (including all analog 4–20 mA signals)
Action and Reset			
Action condition		When the analog input is lower than 4 mA (only detects analog input 4–20 mA).	
Action time		Immediately act	
Warning setting parameter		Pr.03-19 0: Disabled 1: Continue operation at the last frequency (warning, the keypad displays “ANL”) 2: Decelerate to 0 Hz (warning, the keypad displays “ANL”) 3: Stop immediately and display ACE	
Reset method		Auto	“Warning” occurs when Pr.03-19 = 1 or 2. The “Warning automatically clears when the analog input signal is larger than 4 mA.
		Manual	“Error” occurs when Pr.03-19 = 3. You must reset manually.
Reset condition		Immediately reset	
Record		Records when Pr.03-19 = 3 (“Error”). Does not record when Pr.03-19 = 1 or 2 (“Warning”).	
Cause		Corrective Actions	
Loose or broken ACI wiring		Tighten the terminals again. Replace with a new cable.	
External device error		Replace with a new device.	
Hardware error		If the AnL error still occurs after checking all the wiring, return to the factory for repair.	

ID No.	Display on LED Keypad	Warning Name	Description
13	uC	Under current (uC)	Low current

Action and Reset		
Action condition	Pr.06-71	
Action time	Pr.06-72	
Warning setting parameter	Pr.06-73 0: Disabled 1: Fault and coast to stop 2: Fault and ramp to stop by the 2nd deceleration time 3: Warn and continue operation	
Reset method	Auto	"Warning" occurs when Pr.06-73 = 3. The "Warning" automatically clears when the output current is > (Pr.06-71+0.1 A).
	Manual	"Error" occurs when Pr.06-73 = 1 and 2. You must reset manually.
Reset condition	Immediately reset	
Record	Records when Pr.06-73 = 1 or 2 ("Error"). Does not record when Pr.06-73 = 3 ("Warning").	

Cause	Corrective Actions
Broken motor cable	Troubleshoot the connection between the motor and the load.
Improper setting for the low current protection	Set the proper settings for Pr.06-71, Pr.06-72 and Pr.06-73.
The load is too low	Check the loading status. Make sure the loading matches the motor capacity.

ID No.	Display on LED Keypad	Warning Name	Description
20	ot1	Over-torque 1 ot1	Over-torque 1 warning

Action and Reset	
Action condition	Pr.06-07
Action time	Pr.06-08
Warning setting parameter	Pr.06-06 = 1 or 3 0: Disabled 1: Continue operation after over-torque detection during constant speed operation 2: Stop after over-torque detection during constant speed operation 3: Continue operation after over-torque detection during RUN 4: Stop after over-torque detection during RUN
Reset method	When output current < (Pr.06-07 – 5%), the ot1 warning automatically clears.
Reset condition	When input current < (Pr.06-07 – 5%), the ot1 warning automatically clears.
Record	N/A

Cause	Corrective Actions
Incorrect parameter setting	Configure the settings for Pr.06-07 and 06-08 again.
Mechanical error (e.g. Mechanical lock due to over-torque)	Remove the causes of malfunction.
The load is too large	Decrease the load. Replace with a motor with larger capacity.
Accel./ Decel. time and working cycle is too short.	Increase the setting values for Pr.01-12–01-19 (accel./ decel. time).
V/F voltage is too high	Adjust the settings for Pr.01-01–01-08 (V/F curve), especially the setting value for the mid-point voltage (if the mid-point voltage is set too small, the load capacity decreases at low-speed).
The motor capacity is too small	Replace with a motor with larger capacity.
Over-load during low-speed operation.	Decrease the load during low-speed operation. Increase the motor capacity.
The torque compensation is too large.	Readjust the torque compensation value (Pr.07-26 torque compensation gain) till the output current decreases and the motor does not stall.
Improper parameter settings for the speed tracking function (including restart after momentary power loss and restart after fault)	Correct the parameter settings for speed tracking. Start the speed tracking function. Adjust the maximum current for Pr.07-09 speed tracking.

ID No.	Display on LED Keypad	Warning Name	Description
22	oH3	Motor overheating oH3	The AC motor drive detects the temperature inside the motor is too high. Motor over-heating warning for PTC / KTY-84

Action and Reset	
Action condition	● PTC-130 / KTY-84-130: Pr.03-00 = 6 The input level > Pr.06-30 (default = 50%).
Action time	Immediately act
Warning setting parameter	Error treatment: Pr.06-29 0: Warn and continue operation 1: Fault and ramp to stop 2: Fault and coast to stop 3: No warning ● Use PTC-130 / KTY-84-130 When Pr.06-29 = 0 and when the temperature is ≤ Pr.06-30 level, the oH3 warning is automatically cleared. When Pr.06-29 = 0 (“Warning”), it automatically resets.
Reset method	● Use PTC-130 / KTY-84-130: When Pr.06-29 = 0, oH3 displays “Warning”. When the temperature is ≤ Pr.06-30 level, the oH3 warning is automatically cleared.
Reset condition	● Use PTC-130 / KTY-84-130: When the temperature is ≤ Pr.06-30 level, the oH3 warning is automatically cleared.
Record	N/A

Cause	Corrective Actions
Motor locked.	Clear the motor lock status.
The load is too large	Decrease the load. Replace with a motor with larger capacity.
Ambient temperature is too high	Change the installed place if there are heating devices in the surroundings. Install / add cooling a fan or air conditioner to lower the ambient temperature.
Motor cooling system error	Check the cooling system to make it work normally.
Motor fan error	Replace the fan.
Operates at low-speed too long.	Decrease low-speed operation time. Change to the dedicated motor for the drive. Increase the motor capacity.
Accel./ Decel. time and working cycle is too short.	Increase the setting values for Pr.01-12–01-19 (accel./ decel. time).
V/F voltage is too high	Adjust the settings for Pr.01-01–01-02 (V/F curve), especially the setting value for the mid-point voltage (if the mid-point voltage is set too small, the load capacity decreases at low-speed).
Check if the motor rated current matches the motor nameplate	Configure the correct rated current value of the motor again.
Check if the PTC is properly set and wired.	Check the connection between PTC-130 / KTY-84-130 and the heat protection.
Check if the setting for stall prevention is correct	Set the stall prevention to the proper value.
Unbalanced three-phase impedance of the motor	Replace the motor.
Use remedies to reduce harmonics.	Use remedies to reduce harmonics.

ID No.	Display on LCD Keypad	Warning Name	Description
24	oSL	Over slip error (oSL)	Over slip warning. By using the maximum slip (Pr.10-29) as the base, when the drive outputs at constant speed, and the FV > H or F < H exceeds Pr.07-29 level and Pr.07-30 setting time, 100% Pr.07-29 = Pr.10-29.

Action and Reset	
Action level	When the drive outputs at constant speed, and F > H or F < H exceeds the Pr.07-29 level
Action time	Pr.07-30
Warning setting parameter	Pr.07-31 = 0 Warning 0: Warn and continue operation 1: Fault and ramp to stop 2: Fault and coast to stop 3: No warning
Reset method	When Pr.07-31 = 0 and when the drive outputs at constant speed, and F > H or F < H no longer exceeds the Pr.07-29 level, the oSL warning automatically clears.
Reset condition	No function
Record	N/A

Cause	Corrective Actions
Any of the motor parameters in parameter group 5 may be incorrect	Check the motor parameter.
The load is too large	Reduce the load.
Check if the settings for Pr.07-29, Pr.07-30 and Pr.10-29 are properly set	Check the parameter settings for oSL protection.

ID No.	Display on LED Keypad	Warning Name	Description
25	tUn	Auto tuning (tUn)	Parameter auto-tuning is processing. When running auto-tuning, the keypad displays “tUn”.

Action and Reset	
Action condition	When running Pr.05-00 motor parameter auto-tuning, the keypad displays “tUn”.
Action time	No function
Warning setting parameter	No function
Reset method	When auto-tuning is finished and no error occurs, the warning automatically clears.
Reset condition	When auto-tuning is finished and no error occurs.
Record	N/A
Cause	Corrective Actions
The motor parameter is running auto-tuning	When the auto-tuning is finished, the warning automatically clears.

ID No.	Display on LED Keypad	Warning Name	Description
28	OPHL	Output phase loss (OPHL)	Output phase loss of the drive

Action and Reset	
Action condition	Pr.06-47
Action time	No function
Warning setting parameter	Pr.06-45 0: Warn and continue operation 1: Fault and ramp to stop 2: Fault and coast to stop 3: No warning
Reset method	If Pr.06-45 is set to 0, the OPHL warning automatically clears after the drive stops.
Reset condition	No function
Record	N/A

Cause	Corrective Actions
Unbalanced three-phase impedance of the motor	Replace the motor.
Check if the wiring is incorrect.	Check the cable. Replace the cable.
Check if the motor is a single-phase motor.	Choose a three-phase motor.
Check if the current sensor is broken.	Check if the control board cable is loose. If yes, reconnect the cable and run the drive to test. If the error still occurs, send the drive back to the factory for repair. Check if the three-phase current is balanced with a current clamp meter. If the current is balanced and the OPHL error still shows on the display, send the drive back to the factory for repair.
Check if the drive capacity is larger than the motor capacity	Choose the drive that matches the motor capacity.

ID No.	Display on LED Keypad	Warning Name	Description
33	NOut	No output (NOut)	Warn when the PWM output of the drive is disabled

Action and Reset	
Action condition	When Pr.12-07 = 1, the function of stopping PWM output is enabled
Action time	Immediately displays when the fault is detected
Warning setting parameter	Pr.12-07 0: No warning 1: Warn but continue operation
Reset method	Auto-reset when the trigger condition is clear.
Reset condition	Auto-reset when the trigger condition is clear.
Record	N/A
Cause	Corrective Actions
Incorrect parameter setting	Check Pr.12-07

ID No.	Display on LED Keypad	Warning Name	Description
50	PLod	PLC opposite defect (PLod)	PLC download error warning
Action and Reset			
Action condition		During PLC downloading, the program source code detects incorrect address (e.g. the address exceeds the range), then the PLod warning shows.	
Action time		Immediately displays when the fault is detected	
Warning setting parameter		No function	
Reset method		Check if the program is correct and re-download the program. If the fault does not exist, the warning automatically clears.	
Reset condition		No function	
Record		N/A	
Cause		Corrective Actions	
Incorrect data number is found when downloading the PLC program		Use the correct data number.	

ID No.	Display on LED Keypad	Warning Name	Description
51	PLSv	PLC save memory error (PLSv)	Data error during PLC operation
Action and Reset			
Action condition		The program detects incorrect written address (e.g., the address has exceeded the range) during PLC operation, then the PLSv warning shows.	
Action time		Immediately displays when the fault is detected	
Warning setting parameter		No function	
Reset method		Check if the program is correct and re-download the program. If the fault does not exist, the warning automatically clears.	
Reset condition		No function	
Record		N/A	
Cause		Corrective Actions	
An incorrect written address is detected during PLC operation		Make sure the written address is correct and download the program again.	

ID No.	Display on LED Keypad	Warning Name	Description
52	PLdA	Data defect (PLdA)	Data error during PLC operation
Action and Reset			
Action condition		The program detects incorrect write-in address when decoding the program source code and downloading the PLC program (e.g., the address has exceeded the range), then PLdA warning acts.	
Action time		Immediately displays when the fault is detected	
Warning setting parameter		No function	
Reset method		Check if the program is correct and re-download the program. If the fault does not exist, the warning automatically clears.	
Reset condition		No function	
Record		N/A	
Cause		Corrective Actions	
During PLC operation, the external Modbus has written/read incorrect data to internal PLC program		Check if the upper unit transmits the correct command	

ID No.	Display on LED Keypad	Warning Name	Description
53	PLFn	Function defect (PLFn)	PLC download function code error
Action and Reset			
Action condition		PLC download function code error	
Action time		Immediately displays when the fault is detected	
Warning setting parameter		No function	
Reset method		Check if the program is correct and re-download the program. If the fault does not exist, the warning automatically clears.	
Reset condition		No function	
Record		N/A	
Cause		Corrective Actions	
Unsupported command has used while downloading the program		Check if the firmware of the drive is the old version. If yes, contact Delta.	

ID No.	Display on LED Keypad	Warning Name	Description
54	PLor	PLC buffer overflow (PLor)	PLC register overflow
Action and Reset			
Action condition		When PLC runs the last command and the command exceeds the maximum capacity of the program, the PLor warning shows.	
Action time		Immediately displays when the fault is detected	
Warning setting parameter		No function	
Reset method		Check if the program is correct and re-download the program. If the fault does not exist, the warning automatically clears.	
Reset condition		No function	
Record		N/A	
Cause		Corrective Actions	
The program detects internal source code error during PLC operation		1. Disable PLC function 2. Delete PLC program (Pr.00-02 = 6) 3. Enable PLC function. 4. Re-download the PLC program	

ID No.	Display on LED Keypad	Warning Name	Description
55	PLFF	Function defect (PLFF)	Function code error during PLC operation
Action and Reset			
Action condition		The program detects incorrect command (unsupported command) during PLC operation, then PLFF warning shows.	
Action time		Immediately displays when the fault is detected	
Warning setting parameter		No function	
Reset method		Check if the program is correct and re-download the program. If the fault does not exist, the warning automatically clears.	
Reset condition		No function	
Record		N/A	
Cause		Corrective Actions	
The PLC runs an incorrect command during operation		When starting the PLC function and there is no program in the PLC, the PLFF warning occurs. This is a normal warning, please download the program.	

ID No.	Display on LED Keypad	Warning Name	Description
56	PLSn	Checksum error (PLSn)	PLC checksum error

Action and Reset	
Action condition	PLC checksum error is detected after power on, then PLSn warning shows
Action time	Immediately displays when the fault is detected
Warning setting parameter	No function
Reset method	Check if the program is correct and re-download the program. If the fault does not exist, the warning automatically clears.
Reset condition	No function
Record	N/A
Cause	**Corrective Actions**
The program detects checksum error during PLC operation	1. Disable PLC 2. Delete PLC program (Pr.00-02 = 6) 3. Enable PLC function. 4. Re-download the PLC program

ID No.	Display on LED Keypad	Warning Name	Description
57	PLEd	No end command (PLEd)	PLC end command is missing

Action and Reset	
Action condition	The “End” command is missing until the last command is executed, the PLEd warning shows
Action time	Immediately displays when the fault is detected
Warning setting parameter	No function
Reset method	Check if the program is correct and re-download the program. If the fault does not exist, the warning automatically clears.
Reset condition	No function
Record	N/A
Cause	**Corrective Actions**
There is no “END” command during PLC operation	1. Disable PLC 2. Delete PLC program (Pr.00-02 = 6) 3. Enable PLC function. 4. Re-download the PLC program

ID No.	Display on LED Keypad	Warning Name	Description
58	PLCr	PLC MCR error (PLCr)	PLC MCR command error
Action and Reset			
Action condition		The MC command is detected during PLC operation, but there is no corresponded MCR command, then the PLCr warning shows.	
Action time		Immediately displays when the fault is detected	
Warning setting parameter		No function	
Reset method		Check if the program is correct and re-download the program. If the fault does not exist, the warning automatically clears.	
Reset condition		No function	
Record		N/A	
Cause		Corrective Actions	
The MC command is continuously used for more than 9 times		The MC command cannot be used continuously for 9 times. Check and reset the program, then re-download the program.	

ID No.	Display on LED Keypad	Warning Name	Description
59	PLdF	PLC opposite defect (PLdF)	PLC download failure
Action and Reset			
Action condition		PLC download fail due to momentary power loss during the downloading, when power is ON again, PLdF warning shows.	
Action time		Immediately displays when the fault is detected	
Warning setting parameter		No function	
Reset method		Check if the program is correct and re-download the program. If the fault does not exist, the warning automatically clears.	
Reset condition		No function	
Record		N/A	
Cause		Corrective Actions	
PLC download is forced to stop, so the written program is incomplete		Check if there is any error in the program and re-download the PLC program.	

ID No.	Display on LED Keypad	Warning Name	Description
60	PLSF	PLC scan time fail (PLSF)	PLC scan time exceeds the maximum allowable time

Action and Reset	
CANopen Status	When the PLC scan time exceeds the maximum allowable time (400 ms), PLSF warning shows.
Action time	Immediately displays when the fault is detected
Warning setting parameter	No function
Reset method	Check if the program is correct and re-download the program. If the fault does not exist, the warning automatically clears.
Reset condition	No function
Record	N/A
Cause	**Corrective Actions**
The PLC scan time exceeds the maximum allowable time (400ms)	Check if the source code is correct and re-download the program.

ID No.	Display on LED Keypad	Warning Name	Description
70	ECid	ExCom ID fail (ECid)	Duplicate MAC ID error Node address setting error
Action and Reset			
Action condition		Duplicate setting of MAC ID Node address setting error	
Action time		No function	
Warning setting parameter		No function	
Reset method		Correct the setting and cycle the power	
Reset condition		No function	
Record		N/A	
Cause		Corrective Actions	
The setting address exceeds the range (0–63)		Check the address setting of the communication card (Pr.09-70)	
The speed setting exceeds the range		Standard: 0–2; non-standard: 0–7	
The address is duplicated with other nodes on the BUS		Reset the address	

ID No.	Display on LED Keypad	Warning Name	Description
71	ECLv	ExCom power loss (ECLv)	Low voltage of the communication card

Action and Reset	
Action condition	The 5V power that drive provides to communication card is too low
Action time	Immediately act
Warning setting parameter	No function
Reset method	Cycle the power
Reset condition	No function
Record	N/A

Cause	Corrective Actions
The 5V power that the drive provides to the communication card is too low	1. Switch the communication card to other drives and observe if there is ECLv warning shown. If yes, replace with a new communication card; if not, replace the drive. if not, replace the drive. 2. Use another communication card to test if the ECLv warning still occurs on the same drive. If not, replace the card; if not, replace the drive.
The card is loose	Make sure the communication card is well inserted.

ID No.	Display on LED Keypad	Warning Name	Description
72	ECtt	ExCom test mode (ECtt)	The communication card is in the test mode
Action and Reset			
Action condition		Communication card is in the test mode	
Action time		Immediately act	
Warning setting parameter		No function	
Reset method		Cycle the power and enter the normal mode	
Reset condition		No function	
Record		N/A	
Cause		Corrective Actions	
Communication command error		Cycle the power	

ID No.	Display on LED Keypad	Warning Name	Description
73	ECbF	ExCom BUS off (ECbF)	The communication card detects too many errors in the BUS, then enters the bus-off status and stop communicating
Action and Reset			
Action condition	When the drive detects bus-off (for DeviceNet)		
Action time	Immediately act		
Warning setting parameter	No function		
Reset method	Cycle the power		
Reset condition	No function		
Record	N/A		
Cause	Corrective Actions		
Poor connection of the cable	Re-connect the cable		
Bad quality of the cable	Replace the cable		

ID No.	Display on LED Keypad	Warning Name	Description
74	ECnP	ExCom no power (ECnP)	There is no power supply on the DeviceNet
Action and Reset			
Action condition		There is no power supply on the DeviceNet	
Action time		Immediately act	
Warning setting parameter		No function	
Reset method		Cycle the power	
Reset condition		No function	
Record		N/A	
Cause		Corrective Actions	
The drive detects that DeviceNet has no power		Check if the cable and power is normal. If yes, return to the factory for repair.	

ID No.	Display on LED Keypad	Warning Name	Description
75	ECFF	ExCom factory defect (ECFF)	Factory default setting error

Action and Reset	
Action condition	Factory default setting error
Action time	Immediately act
Warning setting parameter	No function
Reset method	Cycle the power
Reset condition	No function
Record	N/A
Cause	**Corrective Actions**
Factory default setting error	Use DCISoft to reset to the default value.

ID No.	Display on LED Keypad	Warning Name	Description
76	ECiF	ExCom inner error (ECiF)	Serious internal error

Action and Reset	
Action condition	Internal memory saving error
Action time	Immediately act
Warning setting parameter	No function
Reset method	Cycle the power
Reset condition	No function
Record	N/A

Cause	Corrective Actions
Noise interference	Verify wiring of the control circuit, and wiring/grounding of the main circuit to prevent interference. Cycle the power.
The memory is broken	Reset to the default value and check if the error still exists. If yes, replace the communication card.

ID No.	Display on LED Keypad	Warning Name	Description
78	ECPP	ExCom Parameter data error (ECPP)	Profibus parameter data error

Action and Reset	
Action condition	No function
Action time	No function
Warning setting parameter	No function
Reset method	Manual reset
Reset condition	Immediately reset
Record	N/A
Cause	Corrective Actions
Incorrect GSD file	Get the correct GSD file from the software

ID No.	Display on LED Keypad	Warning Name	Description
79	ECPi	ExCom configuration data error (ECPi)	Profibus configuration data error
Action and Reset			
Action condition		No function	
Action time		No function	
Warning setting parameter		No function	
Reset method		Manual reset	
Reset condition		Immediately reset	
Record		N/A	
Cause		Corrective Actions	
Incorrect GSD file		Get the correct GSD file from the software	

ID No.	Display on LED Keypad	Warning Name	Description
80	ECEF	Ethernet link fail (ECEF)	Ethernet cable is not connected

Action and Reset	
Action condition	Hardware detection
Action time	Immediately act
Warning setting parameter	No function
Reset method	Manual reset
Reset condition	No function
Record	N/A
Cause	**Corrective Actions**
The Ethernet cable is loose	Re-connect the cable
Bad quality of the cable	Replace the cable

ID No.	Display on LED Keypad	Warning Name	Description
81	ECto	Communication time-out (ECto)	Communication time-out for the communication card and the upper unit
Action and Reset			
Action condition		No function	
Action time		No function	
Warning setting parameter		No function	
Reset method		No function	
Reset condition		CMC-EC01: auto resets when the communication with the upper unit is back to normal.	
Record		N/A	
Cause		Corrective Actions	
Communication card is not connected with the upper unit		Check if the connection of the communication cable is correct	
Communication error of the upper unit		Check if the communication of the upper unit is normal	

ID No.	Display on LED Keypad	Warning Name	Description
82	ECCS	Checksum error (ECCS)	Checksum error for communication card and the drive

Action and Reset	
Action condition	Software detection
Action time	No function
Warning setting parameter	No function
Reset method	Manual reset
Reset condition	Immediately reset
Record	N/A
Cause	Corrective Actions
Noise interference	Verify wiring of the control circuit, and wiring/grounding of the main circuit to prevent interference.

ID No.	Display on LED Keypad	Warning Name	Description
83	ECrF	Return defect (ECrF)	Communication card returns to the default setting
Action and Reset			
Action condition		Communication card returns to the default setting	
Action time		No function	
Warning setting parameter		No function	
Reset method		Manual reset	
Reset condition		Immediately reset	
Record		N/A	
Cause		Corrective Actions	
Communication card is returning to default setting		No actions required.	

ID No.	Display on LED Keypad	Warning Name	Description
84	ECo0	Modbus TCP over (Eco0)	Modbus TCP exceeds the maximum communication value

Action and Reset	
Action condition	Hardware detection
Action time	Immediately act
Warning setting parameter	No function
Reset method	Manual reset
Reset condition	Immediately reset
Record	N/A

Cause	Corrective Actions
The Master communication value exceeds the allowable number of the communication cards	Decrease the Master communication value
Connection occupied due to not disconnecting the Modbus TPC while the upper unit is connected without communicating.	Revise the program of the upper unit to disconnect the connection while the communication is not used for a long time.
A new Modbus TCP connection is built whenever the upper unit is connected to the communication card, which causes connection occupied.	Revise the program of the upper unit to use the same Modbus TCP connection when connecting to the same communication card.

ID No.	Display on LED Keypad	Warning Name	Description
85	ECo1	Modbus TCP over (ECo1)	Ethernet/IP exceeds the maximum communication value

Action and Reset	
Action condition	Hardware detection
Action time	Immediately act
Warning setting parameter	No function
Reset method	Manual reset
Reset condition	Immediately reset
Record	N/A

Cause	Corrective Actions
The Master communication value exceeds the allowable number of the communication cards	Decrease the Master communication value
Connection occupied due to not disconnecting the Modbus TPC while the upper unit is connected without communicating.	Revise the program of the upper unit to disconnect the connection while the communication is not used for a long time.
A new Modbus TCP connection is built whenever the upper unit is connected to the communication card, which causes connection occupied.	Revise the program of the upper unit to use the same Modbus TCP connection when connecting to the same communication card.

ID No.	Display on LED Keypad	Warning Name	Description
86	ECiP	IP fail (ECiP)	IP setting error
Action and Reset			
Action condition		Software detection	
Action time		Immediately act	
Warning setting parameter		No function	
Reset method		Manual reset	
Reset condition		Immediately reset	
Record		N/A	
Cause		Corrective Actions	
IP conflict		Reset IP	
DHCP IP configuration error		MIS check if DHCP Server works normally	

ID No.	Display on LED Keypad	Warning Name	Description
87	EC3F	Mail fail (EC3F)	Mail warning: Alarm mail is sent when the condition that the alarm set for the communication card was met.

Action and Reset	
Action condition	Communication card establishes alarm conditions
Action time	Immediately act
Warning setting parameter	No function
Reset method	Manual reset
Reset condition	Immediately reset
Record	N/A

Cause	Corrective Actions
Communication card establishes alarm conditions	No actions required

ID No.	Display on LED Keypad	Warning Name	Description
88	ECbY	ExCom busy (ECbY)	Communication card busy: too many packets are received

Action and Reset	
Action condition	Software detection
Action time	No function
Warning setting parameter	No function
Reset method	Manual reset
Reset condition	No function
Record	N/A
Cause	Corrective Actions
Too many communication packets for the communication card to process	Decrease communication packets

ID No.	Display on LED Keypad	Warning Name	Description
89	ECCb	ExCom card break (ECCb)	Communication card break off warning
Action and Reset			
Action condition		Communication card break off	
Action time		No function	
Warning setting parameter		No function	
Reset method		Auto resets after communication card is re-installed	
Reset condition		Immediately reset	
Record		N/A	
Cause		Corrective Actions	
The card is loose		Re-install the communication card	

ID No.	Display on LED Keypad	Warning Name	Description
91	CPL0	Copy PLC: Read mode error (CPL0)	Copy PLC Read mode error

Action and Reset	
Action condition	When copy PLC read mode with incorrect process
Action time	Immediately act
Warning setting parameter	No function
Reset method	Manual reset
Reset condition	Directly reset
Record	N/A
Cause	**Corrective Actions**
When copy PLC read mode and the process is incorrect	Cycle the power and copy PLC read mode again.

ID No.	Display on LED Keypad	Warning Name	Description
92	CPL 1	Copy PLC: Write mode (CPL1)	Copy PLC write mode error
Action and Reset			
Action condition		Copy PLC write mode with incorrect process	
Action time		Immediately act	
Warning setting parameter		No function	
Reset method		Manual reset	
Reset condition		Directly reset	
Record		N/A	
Cause		Corrective Actions	
When copy PLC write mode and the process is incorrect		Cycle the power and copy PLC read mode again	

ID No.	Display on LED Keypad	Fault Name	Description
98	Fire	Fire mode output (Fire)	Display when fire mode is triggered
Action and Reset			
Action level		MIx = 58 is triggered and run, or MIx = 59 is triggered	
Action time		Immediately act	
Fault treatment parameter		Refer to Pr.06-81, Pr.06-88 to set the operating frequency and the operation times in fire mode	
Reset method		Manual reset	
Reset condition		Reset in five seconds after the fault is cleared	
Record		Yes	
Cause		Corrective Actions	
MIx = 58 is triggered and run, or MIx = 59 is triggered		If it is triggered in four minutes, then cancel MI setting. If it is triggered over four minutes, then re-power ON.	

ID No.	Display on LED Keypad	Warning Name	Description
101	ictn	InrCOM time-out (ictn)	Internal communication time-out
Action and Reset			
Action condition		When Pr.09-31= (-1) – (-10) (no -9) and the internal communication between Master and Slave is abnormal, the ictn warning shows.	
Action time		Immediately act	
Warning setting parameter		No function	
Reset method		Auto-reset	
Reset condition		The warning automatically clears when the communication is back to normal condition	
Record		N/A	
Cause		Corrective Actions	
Malfunction caused by interference		Verify the wiring and grounding of the communication circuit. It is recommended to separate the communication circuit from the main circuit, or wire in 90 degrees for effective anti-interference performance.	
Different communication setting from the upper unit		Check if the setting for Pr.09-02 is the same as the setting for the upper unit.	
Disconnection or bad connection of the cable		Check the cable and replace it if necessary.	

ID No.	Display on LED Keypad	Warning Name	Description
134	LBAt	Battery low voltage (LBAt)	Remind user to change the battery of perpetual calendar
Action and Reset			
Action condition		No function	
Action time		Immediately displays when the fault is detected	
Warning setting parameter		No function	
Reset method		No function	
Reset condition		Need to change the battery	
Record		N/A	
Cause		Corrective Actions	
The battery is dying		Change the battery	

ID No.	Display on LED Keypad	Warning Name	Description
135	rCAL	Perpetual calendar adjustment (rCAL)	Remind user to adjust the perpetual calendar
Action and Reset			
Action condition		Time has not been adjusted.	
Action time		Immediately displays when the fault is detected	
Fault treatment parameter		No function	
Reset method		Manual reset	
Reset condition		Need to adjust the perpetual calendar	
Record		N/A	
Cause		Corrective Actions	
Time has not been adjusted yet		Adjust time by Pr.12-93–Pr.12-96	

ID No.	Display on LED Keypad	Warning Name	Description
222	LPSn	Low water pressure (LPSn)	The water pressure is lower than the setting
Action and Reset			
Action condition		The feedback pressure is lower than the difference of Pr.12-82 and the target pressure, and the condition continues as the time value set in Pr.12-83.	
Action time		Pr.12-83	
Fault treatment parameter		Pr.12-84 0: Warn and continue operation	
Reset method		Auto-reset when the triggered condition is clear.	
Reset condition		Immediately reset	
Record		N/A	
Cause		Corrective Actions	
No water pressure		Check if water leakage occurs in pipe, or no water inputs	
Pressure sensor is broken		Change the pressure sensor.	

ID No.	Display on LED Keypad	Warning Name	Description
223	dr yn	Dry pump (dryn)	Dry pump condition is detected.
Action and Reset			
Action condition		The power corresponds to the target frequency is under the dry pump curve.	
Action time		Pr.12-69	
Warning setting parameter		Pr.12-72 1: Fault and coast to stop 2: Fault and ramp to stop	
Reset method		Auto-reset when the trigger condition is clear.	
Reset condition		Auto-reset	
Record		N/A	
Cause		Corrective Actions	
The inlet of the water pump is broken		Check if the pipe is broken, or no water input.	

ID No.	Display on LED Keypad	Warning Name	Description
224	LEKn	Heavy water leakage (LEKn)	Triggered when heavy water leakage is detected
Action and Reset			
Action level		When the feedback is lower than Plow and the load current is larger than Pr.12-75	
Action time		Pr.12-74	
Warning setting parameter		Pr.12-76 0: Warn and continue operation	
Reset method		Auto-reset when the trigger condition is clear.	
Reset condition		When the feedback is lower than Plow and the load current is larger than Pr.12-75	
Record		N/A	
Cause		Corrective Actions	
The outlet of the water pump is broken		Check if the pipe is broken.	

ID No.	Display on LED Keypad	Warning Name	Description
225	CAvi	Cavitation (CAvi)	Warning occurs when the drive is in cavitation status
Action and Reset			
Action level		When the rotational speed is over 100rpm, starts to detect NPSHr and the corresponding flow, and also Pr.12-19 (tolerance) is above the cavitation curve.	
Action time		Immediately displays when the fault is detected	
Warning setting parameter		Pr.12-18 000xh: No warning when cavitation occurs 001xh: Warn when cavitation occurs and continue operation	
Reset method		Auto-reset when the trigger condition is clear.	
Reset condition		Auto-reset	
Record		N/A	
Cause		Corrective Actions	
Incorrect parameter setting		Check NPSHr (Pr.12-45–Pr.12-49) and the flow (Pr.12-35–Pr.12-39)	
Design of the piping and water pump		Reduce the speed and the tolerance of pump (Pr.12-19)	

Chapter 14 Fault Codes

Summary of Fault Codes

ID No.	Fault Name	ID No.	Fault Name
0	No record	48	ACI loss (ACE)
1	Over-current during acceleration (ocA)	49	External fault (EF)
2	Over-current during deceleration (ocd)	51	External base block (bb)
3	Over-current during steady operation (ocn)	52	Password is locked (Pcod)
4	Ground fault (GFF)	54	Illegal command (CE1)
6	Over-current at stop (ocS)	55	Illegal data address (CE2)
7	Over-voltage during acceleration (ovA)	56	Illegal data value (CE3)
8	Over-voltage during deceleration (ovd)	57	Data is written to read-only address (CE4)
9	Over-voltage at constant speed (ovn)	58	Modbus transmission time-out (CE10)
10	Over-voltage at stop (ovS)	63	Over slip error (oSL)
11	Low-voltage during acceleration (LvA)	79	U-phase over-current before run (Aoc)
12	Low-voltage during deceleration (Lvd)	80	V-phase over-current before run (boc)
13	Low-voltage at constant speed (Lvn)	81	W-phase over-current before run (coc)
14	Low-voltage at stop (LvS)	82	Output phase loss U phase (OPL1)
15	Phase loss protection (OrP)	83	Output phase loss V phase (OPL2)
16	IGBT overheating (oH1)	84	Output phase loss W phase (OPL3)
17	Internal key parts overheating (oH2)	87	Overload protection at low frequency (oL3)
18	IGBT temperature detection failure (tH1o)	89	Rotor position detection error (RoPd)
19	Capacitor hardware error (tH2o)	90	Force to stop (FStp)
21	Over load (oL)	98	Fire mode output (Fire)
22	Electronic thermal relay 1 protection (EoL1)	140	oc hardware error (Hd6)
24	Motor overheating (oH3) PTC-130 /KTY-84-130	141	GFF occurs before run (b4GFF)
26	Over torque 1 (ot1)	142	Auto-tune error 1 (AUE1)
28	Under current (uC)	143	Auto-tune error 2 (AUE2)
31	EEPROM read error (cF2)	144	Auto-tune error 3 (AUE3)
33	U-phase error (cd1)	221	High water pressure (HPS)
34	V-phase error (cd2)	222	Low water pressure (LPSE)
35	W-phase error (cd3)	223	Dry pump (dryE)
36	cc hardware failure (Hd0)	224	Water leaking (pipe explosion) (LEKE)
37	oc hardware error (Hd1)	225	Clogged pipe (JAME)
40	Auto-tuning error (AUE)	226	RTC error (rtF)
41	PID loss ACI (AFE)	227	Dry pump curve auto-measuring (dAUE)

ID No.	Display on LED Keypad	Fault Name	Description
1	ocA	Over-current during acceleration (ocA)	Output current exceeds 2.5 times of the rated current during acceleration. When ocA occurs, the drive closes the gate of the output immediately, the motor runs freely, and the display shows an ocA error.

Action and Reset	
Action condition	250% of the rated current (software)
Action time	Immediately act
Fault treatment parameter	N/A
Reset method	Manual reset
Reset condition	Reset in five seconds after the fault is cleared
Record	Yes

Cause	Corrective Actions
Acceleration time setting is too short.	1. Increase the acceleration time. 2. Increase the acceleration time of S-curve 3. Set auto-acceleration and auto-deceleration parameter (Pr.01-44) 4. Use over-voltage stall prevention (Pr.06-03). 5. Replace the drive with a larger capacity model.
Short-circuit at motor output due to poor insulation wiring	Check the motor cable and remove causes of the short circuits, or replace the cable before turning on the power.
Check for possible burnout or aging insulation of the motor	Check the motor insulation value with megger. Replace the motor if the insulation is poor.
The load is too large	Check if the output current during the whole working process exceeds the AC motor drive's rated current. If yes, replace the AC motor drive with a larger capacity model.
Impulsive change of the load	Reduce the load or increase the capacity of AC motor drive.
Use special motor or motor with larger capacity than the drive	Check the motor capacity (the rated current on the motor's nameplate should ≤ the rated current of the drive)
Use ON / OFF controller of an electromagnetic contactor at the output (U/V/W) of the drive	Check the action timing of the contactor and make sure it is not turned ON/OFF when the drive outputs the voltage.
V/F curve setting error	Adjust the V/F curve setting and frequency/voltage. When the fault occurs, and the frequency voltage is too high, reduce the voltage.
The torque compensation is too large.	Readjust the torque compensation value (Pr.07-26 torque compensation gain) till the output current decreases and the motor does not stall.
Malfunction caused by interference	Verify wiring of the control circuit, and wiring/grounding of the main circuit to prevent interference.
The motor starts when in free run	Enable the speed tracking during start-up of Pr.07-12.
Improper parameter settings for the speed tracking function (including restart after momentary power loss and restart after fault)	Correct the parameter settings for speed tracking. 1. Start the speed tracking function. 2. Adjust the maximum current for Pr.07-09 speed tracking.
Incorrect combination of control mode and used motor	Check the settings for Pr.00-11 control mode: 1. For IM motor, Pr.00-11=0, 2, Pr.05-33=0 2. For PM motor, Pr.00-11=2, Pr.05-33=1, 2
The length of motor cable is too long	Increase the drive capacity. Install AC reactor(s) on the output side (U/V/W).

Hardware error	The ocA occurs due to the short circuit or ground fault at the output side of the drive. Check for possible short circuits between terminals with the electric meter. If short circuits occur, return to the factory for repair. B1 corresponds to U, V and W; DC- corresponds to U, V and W; ⏚ corresponds to U, V and W.
Check if the setting for stall prevention is correct	Set the stall prevention to the proper value.

ID No.	Display on LED Keypad	Fault Name	Description
2	ocd	Over-current during deceleration (ocd)	Output current exceeds 2.5 times of the rated current during deceleration. When ocd occurs, the drive closes the gate of the output immediately, the motor runs freely, and the display shows an ocd error.

Action and Reset	
Action condition	250% of the rated current
Action time	Immediately act
Fault treatment parameter	N/A
Reset method	Manual reset
Reset condition	Reset in five seconds after the fault is cleared
Record	Yes

Cause	Corrective Actions
Acceleration time setting is too short.	1. Increase the deceleration time 2. Increase the deceleration time of S-curve 3. Set auto-acceleration and auto-deceleration parameter (Pr.01-44) 4. Use over-voltage stall prevention (Pr.06-03). 5. Replace the drive with a larger capacity model.
Check if the mechanical brake of the motor activates too early	Check the action timing of the mechanical brake
Short-circuit at motor output due to poor insulation wiring	Check the motor cable and remove causes of the short circuits, or replace the cable before turning on the power.
Check for possible burnout or aging insulation of the motor	Check the motor insulation value with megger. Replace the motor if the insulation is poor.
The load is too large	Check if the output current during the whole working process exceeds the AC motor drive's rated current. If yes, replace the AC motor drive with a larger capacity model.
Impulsive change of the load	Reduce the load or increase the capacity of AC motor drive.
Use special motor or motor with larger capacity than the drive	Check the motor capacity (the rated current on the motor's nameplate should ≤ the rated current of the drive)
Use ON / OFF controller of an electromagnetic contactor at the output (U/V/W) of the drive	Check the action timing of the contactor and make sure it is not turned ON/OFF when the drive outputs the voltage.
V/F curve setting error	Adjust the V/F curve setting and frequency / voltage. When the fault occurs, and the frequency voltage is too high, reduce the voltage.
The torque compensation is too large.	Readjust the torque compensation value (Pr.07-26 torque compensation gain) till the output current decreases and the motor does not stall.
Malfunction caused by interference	Verify wiring of the control circuit, and wiring / grounding of the main circuit to prevent interference.
The length of motor cable is too long	Increase the drive capacity. Install AC reactor(s) on the output side (U/V/W).
Hardware error	The ocd occurs due to the short circuit or ground fault at the output side of the drive. Check for possible short circuits between terminals with the electric meter. If short circuits occur, return to the factory for repair. B1 corresponds to U, V and W; DC- corresponds to U, V and W; ⏚ corresponds to U, V and W.
Check if the setting for stall prevention is correct	Set the stall prevention to the proper value.

ID No.	Display on LED Keypad	Fault Name	Description
3	ocn	Over-current during steady operation (ocn)	Output current exceeds 2.5 times of the rated current during constant speed. When ocn occurs, the drive closes the gate of the output immediately, the motor runs freely, and the display shows an ocn error.

Action and Reset	
Action condition	250% of the rated current
Action time	Immediately act
Fault treatment parameter	No function
Reset method	Manual reset
Reset condition	Reset in five seconds after the fault is cleared
Record	Yes

Cause	Corrective Actions
Short-circuit at motor output due to poor insulation wiring	Check the motor cable and remove causes of the short circuits, or replace the cable before turning on the power.
Check for possible shaft lock, burnout or aging insulation of the motor	Troubleshoot the motor shaft lock. Check the motor insulation value with megger. Replace the motor if the insulation is poor.
Impulsive change of the load	Reduce the load or increase the capacity of AC motor drive.
Use special motor or motor with larger capacity than the drive	Check the motor capacity (the rated current on the motor's nameplate should ≤ the rated current of the drive)
Use ON / OFF controller of an electromagnetic contactor at the output (U/V/W) of the drive	Check the action timing of the contactor and make sure it is not turned ON/OFF when the drive outputs the voltage.
V/F curve setting error	Adjust the V/F curve setting and frequency/voltage. When the fault occurs, and the frequency voltage is too high, reduce the voltage.
The torque compensation is too large.	Readjust the torque compensation value (Pr.07-26 torque compensation gain) till the output current decreases and the motor does not stall.
Malfunction caused by interference	Verify wiring of the control circuit, and wiring/grounding of the main circuit to prevent interference.
The length of motor cable is too long	Increase the drive capacity. Install AC reactor(s) on the output side (U/V/W).
Hardware error	The ocn occurs due to short circuit or ground fault at the output side of the drive. Check for possible short circuits between terminals with the electric meter. If short circuits occur, return to the factory for repair. B1 corresponds to U, V and W; DC- corresponds to U, V and W; ⏚ corresponds to U, V and W.

ID No.	Display on LED Keypad	Fault Name	Description
4	GFF	Ground fault (GFF)	When (one of) the output terminal(s) is grounded, short circuit current is larger than Pr.06-60 setting value, and the detection time is longer than Pr.06-61 time setting, GFF occurs. NOTE: the short circuit protection is provided for AC motor drive protection, not to protect you.

Action and Reset	
Action condition	Pr.06-60 (Default = 60%)
Action time	Pr.06-61 (Default = 0.10 sec.)
Fault treatment parameter	No function
Reset method	Manual reset
Reset condition	Reset in five seconds after the fault is cleared
Record	Yes

Cause	Corrective Actions
Motor burnout or aging insulation occurred	Check the motor insulation value with megger. Replace the motor if the insulation is poor.
Short circuit due to broken cable	Troubleshoot the short circuit. Replace the cable.
Larger stray capacitance in the cable and terminal ⏚	If the motor cable length exceeds 100 m, decrease the setting value for the carrier frequency. Take remedies to reduce stray capacitance.
Malfunction caused by interference	Verify the wiring and grounding of the communication circuit. It is recommended to separate the communication circuit from the main circuit, or wire in 90 degrees for effective anti-interference performance.
Hardware error	Cycle the power after checking the status of motor, cable and cable length. If GFF still exists, return to the factory for repair.

ID No.	Display on LED Keypad	Fault Name	Description
6	ocS	Over-current at stop (ocS)	Over-current or hardware failure in current detection at stop. Cycle the power after ocS occurs. If the hardware failure occurs, the display shows cd1, cd2 or cd3.
Action and Reset			
Action condition		240% of the rated current	
Action time		Immediately act	
Fault treatment parameter		No function	
Reset method		Manual reset	
Reset condition		Reset in five seconds after the fault is cleared	
Record		Yes	
Cause		Corrective Actions	
Malfunction caused by interference		Verify wiring of the control circuit, and wiring / grounding of the main circuit to prevent interference.	
Hardware error		Check if other error codes such as cd1–cd3 occur after cycling the power. If yes, return to the factory for repair.	

ID No.	Display on LED Keypad	Fault Name	Description
7	ovA	Over-voltage during acceleration. (ovA)	DC bus over-voltage during acceleration. When ovA occurs, the drive closes the gate of the output, the motor runs freely, and the display shows an ovA error.

Action and Reset	
Action condition	230V models: 410V_{DC} 460V models: 820V_{DC}
Action time	Immediately act when the DC bus voltage is higher than the level
Fault treatment parameter	No function
Reset method	Manual reset
Reset condition	Reset only when the DC bus voltage is lower than 90% of the over-voltage level
Record	Yes

Cause	Corrective Actions
Acceleration is too slow (e.g. When elevator is going down)	Decrease the acceleration time. Replace with a drive with larger capacity.
The setting for stall prevention level is smaller than no-load current.	The setting for stall prevention level should be larger than no-load current.
Power voltage is too high	Check if the input voltage is within the rated AC motor drive input voltage range, and check for possible voltage spikes.
ON/OFF switch action of phase-in capacitor in the same power system	If the phase-in capacitor or active power supply unit acts in the same power system, the input voltage may surge abnormally in a short time. In this case, install an AC reactor.
Regenerative voltage of motor inertia	Use over-voltage stall prevention function (Pr.06-01) Set auto-acceleration and auto-deceleration parameter (Pr.01-44)
Acceleration time is too short	Check if the over-voltage warning occurs after acceleration stops. When the warning occurs, do the following: 1. Increase the acceleration time 2. Set Pr.06-01 over-voltage stall prevention 3. Increase the setting value for Pr.01-25 S-curve acceleration arrival time 2
Motor ground fault	The ground short circuit current charges the capacitor in the main circuit through the power. Check if there is ground fault on the motor cable, wiring box and its internal terminals. Troubleshoot the ground fault.
Malfunction caused by interference	Verify wiring of the control circuit, and wiring/grounding of the main circuit to prevent interference.

ID No.	Display on LED Keypad	Fault Name	Description
8	ovd	Over-voltage during deceleration (ovd)	DC bus over-voltage during deceleration. When ovd occurs, the drive closes the gate of the output immediately, the motor runs freely, and the display shows an ovd error.
Action and Reset			
Action condition		230V models: 410V_{DC} 460V models: 820V_{DC}	
Action time		Immediately act when the DC bus voltage is higher than the level	
Fault treatment parameter		N/A	
Reset method		Manual reset	
Reset condition		Reset only when the DC bus voltage is lower than 90% of the over-voltage level	
Record		Yes	
Cause		Corrective Actions	
Deceleration time is too short, causing too large regenerative energy of the load		1. Increase the setting value for Pr.01-13, Pr.01-15, Pr.01-17 and Pr.01-19 (deceleration time). 2. Reduce the brake frequency. 3. Replace with a drive with larger capacity. 4. Use S-curve acceleration/deceleration. 5. Use over-voltage stall prevention function (Pr.06-01) 6. Set auto-acceleration and auto-deceleration parameter (Pr.01-44) 7. Adjust braking level (Pr.07-01).	
The setting for stall prevention level is smaller than no-load current.		The setting for stall prevention level should be larger than no-load current.	
Power voltage is too high		Check if the input voltage is within the rated AC motor drive input voltage range, and check for possible voltage spikes.	
ON/OFF switch action of phase-in capacitor in the same power system		If the phase-in capacitor or active power supply unit acts in the same power system, the input voltage may surge abnormally in a short time. In this case, install an AC reactor.	
Motor ground fault		The ground short circuit current charges the capacitor in the main circuit through the power. Check if there is ground fault on the motor cable, wiring box and its internal terminals. Troubleshoot the ground fault.	
Malfunction caused by interference		Verify wiring of the control circuit, and wiring/grounding of the main circuit to prevent interference.	

ID No.	Display on LED Keypad	Fault Name	Description
9	ovn	Over-voltage at constant speed (ovn)	DC bus over-voltage at constant speed. When ovn occurs, the drive closes the gate of the output immediately, the motor runs freely, and the display shows an ovn error.

Action and Reset	
Action condition	230V models: 410V_{DC} 460V models: 820V_{DC}
Action time	Immediately act when the DC bus voltage is higher than the level
Fault treatment parameter	No function
Reset method	Manual reset
Reset condition	Reset only when the DC bus voltage is lower than 90% of the over-voltage level
Record	Yes
Cause	**Corrective Actions**
Impulsive change of the load	1. Reduce the load. 2. Replace with a drive with larger capacity. 3. Adjust braking level (Pr.07-01).
The setting for stall prevention level is smaller than no-load current.	The setting for stall prevention level should be larger than no-load current.
Regenerative voltage of motor inertia	Use over-voltage stall prevention function (Pr.06-01)
Power voltage is too high	Check if the input voltage is within the rated AC motor drive input voltage range, and check for possible voltage spikes.
ON/OFF switch action of phase-in capacitor in the same power system	If the phase-in capacitor or active power supply unit acts in the same power system, the input voltage may surge abnormally in a short time. In this case, install an AC reactor.
Motor ground fault	The ground short circuit current charges the capacitor in the main circuit through the power. Check if there is ground fault on the motor cable, wiring box and its internal terminals. Troubleshoot the ground fault.
Malfunction caused by interference	Verify wiring of the control circuit, and wiring/grounding of the main circuit to prevent interference.

ID No.	Display on LED Keypad	Fault Name	Description
10	ovS	Over-voltage at stop (ovS)	The drive has over-voltage at stop
Action and Reset			
Action condition		230V models: 410V_{DC} 460V models: 820V_{DC}	
Action time		Immediately act when the DC bus voltage is higher than the level	
Fault treatment parameter		N/A	
Reset method		Manual reset	
Reset condition		Reset only when the DC bus voltage is lower than 90% of the over-voltage level	
Record		Yes	
Cause		Corrective Actions	
Power voltage is too high		Check if the input voltage is within the rated AC motor drive input voltage range, and check for possible voltage spikes.	
ON/OFF switch action of phase-in capacitor in the same power system		If the phase-in capacitor or active power supply unit acts in the same power system, the input voltage may surge abnormally in a short time. In this case, install an AC reactor.	
Malfunction caused by interference		Verify wiring of the control circuit, and wiring/grounding of the main circuit to prevent interference.	
Hardware error Hardware failure in voltage detection		Check if other error codes such as cd1–cd3 occur after cycling the power. If yes, return to the factory for repair.	
Motor ground fault		The ground short circuit current charges the capacitor in the main circuit through the power. Check if there is ground fault on the motor cable, wiring box and its internal terminals. Troubleshoot the ground fault.	

ID No.	Display on LED Keypad	Fault Name	Description
11	LvA	Low-voltage during acceleration (LvA)	DC bus voltage is lower than Pr.06-00 setting value during acceleration.
Action and Reset			
Action condition		Pr.06-00 (Default = depend on the model)	
Action time		Immediately act when the DC bus voltage is lower than Pr.06-00	
Fault treatment parameter		N/A	
Reset method		Manual reset	
Reset condition		Reset when DC bus voltage is higher than Pr.06-00 + 30 V (230V series) / + 60 V (460V series).	
Record		N/A	
Cause		Corrective Actions	
Power-off		Improve power supply condition.	
Power voltage changes		Adjust voltage to the power range of the drive.	
Start up the motor with large capacity		Check the power system. Increase the capacity of power equipment.	
The load is too large		Reduce the load. Increase the drive capacity. Increase the acceleration time.	

ID No.	Display on LED Keypad	Fault Name	Description
12	Lvd	Low-voltage during deceleration (Lvd)	DC bus voltage is lower than Pr.06-00 setting value during deceleration.
Action and Reset			
Action condition		Pr.06-00 (Default = depend on the model)	
Action time		Immediately act when the DC bus voltage is lower than Pr.06-00	
Fault treatment parameter		No function	
Reset method		Manual reset	
Reset condition		Reset when DC bus voltage is higher than Pr.06-00 + 30 V (230V series) / + 60 V (460V series).	
Record		N/A	
Cause		Corrective Actions	
Power-off		Improve power supply condition.	
Power voltage changes		Adjust voltage to the power range of the drive.	
Start up the motor with large capacity		Check the power system. Increase the capacity of power equipment.	
Sudden load		Reduce the load. Increase the drive capacity.	

ID No.	Display on LED Keypad	Fault Name	Description
13	Lvn	Low-voltage at constant speed (Lvn)	DC bus voltage is lower than Pr.06-00 setting value at constant speed.
Action and Reset			
Action condition		Pr.06-00 (Default = depend on the model)	
Action time		Immediately act when the DC bus voltage is lower than Pr.06-00	
Fault treatment parameter		N/A	
Reset method		Manual reset	
Reset condition		Reset when DC bus voltage is higher than Pr.06-00 + 30 V (230V series) / + 60 V (460V series).	
Record		N/A	
Cause		Corrective Actions	
Power-off		Improve power supply condition.	
Power voltage changes		Adjust voltage to the power range of the drive.	
Start up the motor with large capacity		Check the power system. Increase the capacity of power equipment.	
Sudden load		Reduce the load. Increase the drive capacity.	

ID No.	Display on LED Keypad	Fault Name	Description
14	LvS	14: Low-voltage at stop (LvS)	1. DC bus voltage is lower than Pr.06-00 setting value at stop. 2. Hardware failure in voltage detection
Action and Reset			
Action condition		Pr.06-00 (Default = depend on the model)	
Action time		Immediately act when the DC bus voltage is lower than Pr.06-00	
Fault treatment parameter		N/A	
Reset method		Manual / Auto 230V series: Lv level + 30 V_{DC} + 500 ms 460V series: Lv level + 60V_{DC} + 500 ms	
Reset condition		500ms	
Record		Yes	
Cause		Corrective Actions	
Power-off		Improve power supply condition.	
Incorrect drive models		Check if the power specification matches the drive.	
Power voltage changes		Adjust voltage to the power range of the drive. Cycle the power after checking the power. If LvS error still exists, return to the factory for repair.	
Start up the motor with large capacity		Check the power system. Increase the capacity of power equipment.	

ID No.	Display on LED Keypad	Fault Name	Description
15	OrP	Phase loss protection (OrP)	Phase loss of power input
Action and Reset			
Action condition		DC bus is lower than Pr.07-00, and DC bus ripple is too high.	
Action time		N/A	
Fault treatment parameter		Pr.06-53	
Reset method		Manual reset	
Reset condition		Immediately reset when DC bus is higher than Pr.07-00	
Record		Yes	
Cause		Corrective Actions	
Phase loss of input power		Correctly install the wiring of the main circuit power.	
Single phase power input to three-phase models		Use the model with voltage that matches the power.	
Power voltage changes		If the main circuit power works normally, verify the main circuit. Cycle the power after checking the power. If OrP error still exists, return to the factory for repair.	
Loose wiring terminal of input power		Tighten the terminal screws according to the torque described in the user manual.	
The input cable of three-phase power is cut off.		Wire correctly. Replace the cut off cable.	
Unbalanced three-phase of input power		Check the power three-phase status.	
Use open delta connection system (V-V system)		Install reactors or use drives with higher power.	

ID No.	Display on LED Keypad	Fault Name	Description
16	oH1	IGBT overheating oH1	IGBT temperature exceeds the protection level. (Refer to Pr.06-15)

Action and Reset	
Action condition	The fault level of oH1 is 115ºC
Action time	IGBT temperature exceeds the protection level for more than 100 ms, oH1 error occurs.
Fault treatment parameter	N/A
Reset method	Manual reset
Reset condition	Reset only when IGBT temperature is lower than oH1 error level minus (-) 10°C.
Record	Yes

Cause	Corrective Actions
Check if the ambient temperature or temperature inside the cabinet is too high, or if there is obstruction in the ventilation hole of the control cabinet.	Check the ambient temperature. Regularly inspect the ventilation hole of the control cabinet. Install / add cooling a fan or air conditioner to lower the temperature inside the cabinet.
Check if there is any obstruction on the heat sink or if the fan is running.	Remove the obstruction or replace the cooling fan.
Insufficient ventilation space	Increase ventilation space of the drive.
Check if the drive matches the corresponded loading.	1. Reduce the load. 2. Decrease the carrier wave. 3. Replace with a drive with larger capacity.
The drive has run 100% or more than 100% of the rated output for a long time.	Replace with a drive with larger capacity.

ID No.	Display on LCD Keypad	Fault Name	Description
17	oH2	Internal key parts overheating (oH2)	The drive has detected the key components are overheat
Action and Reset			
Action condition		The fault level of oH2 is 95ºC	
Action time		The oH2 fault occurs when the temperature sensor of key components detects the temperature is higher than the protection level for 100ms.	
Fault treatment parameter		N/A	
Reset method		Manual reset	
Reset condition		The drive auto-resets when the temperature sensor of key components detects the temperature is lower than oH2 error level minus (–) 10ºC.	
Record		Yes	
Cause		Corrective Actions	
Check if the ambient temperature or temperature inside the cabinet is too high, or if there is obstruction in the ventilation hole of the control cabinet.		Check the ambient temperature. Regularly inspect the ventilation hole of the control cabinet. Install / add cooling a fan or air conditioner to lower the temperature inside the cabinet.	
Check if there is any obstruction on the heat sink or if the fan is running.		Remove the obstruction or replace the cooling fan.	
Insufficient ventilation space		Increase ventilation space of the drive.	
Check if the drive matches the corresponded loading.		1. Reduce the load. 2. Decrease the carrier wave. 3. Replace with a drive with larger capacity.	
The drive has run 100% or more than 100% of the rated output for a long time.		Replace with a drive with larger capacity.	
Unstable power		Install reactor(s)	
Load changes frequently		Reduce load changes	

ID No.	Display on LED Keypad	Fault Name	Description
18	tH1o	IGBT temperature detection failure (tH1o)	IGBT hardware failure in temperature detection
Action and Reset			
Action condition		NTC broken or wiring failure	
Action time		When the IGBT temperature is higher than the protection level, and detection time exceeds 100 ms, the tH1o protection activates.	
Fault treatment parameter		N/A	
Reset method		Manual reset	
Reset condition		Immediately reset	
Record		Yes	
Cause		Corrective Actions	
Hardware error		Wait for 10 minutes, and then cycle the power. Check if tH1o protection still exists. If yes, return to the factory for repair.	

ID No.	Display on LED Keypad	Fault Name	Description
19	tH2o	Capacitor hardware error (tH2o)	Hardware failure in capacitor temperature detection
Action and Reset			
Action condition		NTC broken or wiring failure	
Action time		When the IGBT temperature is higher than the protection level, and detection time exceeds 100ms, the tH2o protection occurs.	
Fault treatment parameter		N/A	
Reset method		Manual reset	
Reset condition		Immediately reset	
Record		Yes	
Cause		Corrective Actions	
Hardware error		Wait for 10 minutes, and then cycle the power. Check if tH2o protection still exists. If yes, return to the factory for repair.	

ID No.	Display on LED Keypad	Fault Name	Description
21	oL	Over load (oL)	The AC motor drive detects excessive drive output current. ● Normal duty: 120 % of rated current can endure for 1 minute during every 5 minutes; 150 % of rated current can endure for 3 seconds during every 30 seconds ● Heavy duty: 150 % of rated current can endure for 1 minute during every 5 minutes; 200 % of rated current can endure for 3 seconds during every 30 seconds

Action and Reset	
Action condition	Based on overload curve and derating curve (Pr.06-55)
Action time	When the load is higher than the protection level and exceeds allowable time, the oL protection activates.
Fault treatment parameter	N/A
Reset method	Manual reset
Reset condition	Reset in five seconds after the fault is cleared
Record	Yes
Cause	**Corrective Actions**
The load is too large	Decrease the loading.
Accel./ Decel. time and working cycle is too short.	Increase the setting values for Pr.01-12–01-19 (accel./ decel. time).
V/F voltage is too high	Adjust the settings for Pr.01-01–01-02 (V/F curve), especially the setting value for the mid-point voltage (if the mid-point voltage is set too small, the load capacity decreases at low-speed). Refer to the V/F curve selection of Pr.01-43.
The capacity of the drive is too small	Replace the drive with a larger capacity model.
Over-load during low-speed operation.	Decrease the load during low-speed operation. Increase the drive capacity. Decrease the carrier frequency of Pr.00-17.
The torque compensation is too large.	Readjust the torque compensation value (Pr.07-26 torque compensation gain) till the output current decreases and the motor does not stall.
Check if the setting for stall prevention is correct	Set the stall prevention to the proper value.
Output phase loss	Check the status of three-phase motor. Check if the cable is broken or the screws are loose.
Improper parameter settings for the speed tracking function (including restart after momentary power loss and restart after fault)	Correct the parameter settings for speed tracking. Start the speed tracking function. Adjust the maximum current for Pr.07-09 speed tracking.

ID No.	Display on LED Keypad	Fault Name	Description
22	EoL 1	Electronic thermal relay 1 protection (EoL1)	Electronic thermal relay 1 protection. The drive coasts to stop once it activates.
Action and Reset			
Action condition		Start counting when output current > 150% of motor 1 rated current.	
Action time		Pr.06-14 (if the output current is larger than 105% of motor 1 rated current again within 60 sec., the counting time reduces and is less than Pr.06-14.)	
Fault treatment parameter		N/A	
Reset method		Manual reset	
Reset condition		Reset in five seconds after the fault is cleared	
Record		Yes	
Cause		Corrective Actions	
The load is too large		Decrease the loading.	
Accel./ Decel. time and working cycle is too short.		Increase the setting values for Pr.01-12–01-19 (accel./ decel. time).	
V/F voltage is too high		Adjust the settings for Pr.01-01–01-02 (V/F curve), especially the setting value for the mid-point voltage (if the mid-point voltage is set too small, the load capacity decreases at low-speed).	
Over-load during low-speed operation. When using a general motor, even it operates below rated current, an overload may still occur during low-speed operation.		Decrease low-speed operation time. Change to the dedicated motor for the drive. Increase the motor capacity.	
When using VFD dedicated motors, Pr.06-13=0 (electronic thermal relay selection motor 1 = 0 inverter motor)		Pr.06-13=1 electronic thermal relay selection motor 1 = standard motor (motor with fan on the shaft).	
Incorrect value of electronic thermal relay		Configure the correct rated current value of the motor again.	
The maximum motor frequency is set too low		Reset to the correct motor rated frequency.	
One drive to multiple motors		Set Pr.06-13=2 electronic thermal relay selection motor 1 = disable, and install thermal relay on each motor.	
Check if the setting for stall prevention is correct		Set the stall prevention to the proper value.	
The torque compensation is too large.		Readjust the torque compensation value (Pr.07-26 torque compensation gain) till the output current decreases and the motor does not stall.	
Motor fan error		Check the status of the fan, or replace the fan.	
Unbalanced three-phase impedance of the motor		Replace the motor.	

ID No.	Display on LED Keypad	Fault Name	Description
24	oH3	Motor overheating (oH3)	The AC motor drive detects the temperature inside the motor is too high. Motor over-heating warning for PTC-130 / KTY-84-130 ● When using motor with PTC-130 / KTY-84-130, and enable the function (Pr.03-00–03-02 = 6 PTC-130 / KTY-84-130) The input of PTC-130 / KTY-84-130 > Pr.06-30, then treats with the Pr.06-29 setting.

Action and Reset		
Action condition	● PTC-130 / KTY-84-130: Pr.03-00 = 6, the input level > Pr.06-30 (default = 50%).	
Action time	Immediately act	
Fault treatment parameter	Error treatment: Pr.06-29 0: Warn and continue operation 1: Fault and ramp to stop 2: Fault and coast to stop 3: No warning	
Reset method	Auto	"Warning" occurs when Pr.06-29 = 0. ● Use PTC-130 / KTY-84-130 When the temperature is < Pr.06-30 level, the oH3 warning is automatically cleared.
	Manual	"Error" occurs when Pr.06-29 = 1 or 2. You must reset manually.
Reset condition	Immediately reset	
Record	When Pr.06-29=1 or 2, oH3 is a fault, and the fault is recorded	

Cause	Corrective Actions
Motor locked.	Clear the motor lock status.
The load is too large	Reduce the load. Increase the motor capacity.
Ambient temperature is too high	Change the installed place if there are heating devices in the surroundings. Install / add cooling a fan or air conditioner to lower the ambient temperature.
Motor cooling system error	Check the cooling system to make it work normally.
Motor fan error	Replace the fan.
Operates at low-speed too long.	Decrease low-speed operation time. Change to the dedicated motor for the drive. Increase the motor capacity.
Accel./ Decel. time and working cycle is too short.	Increase the setting values for Pr.01-12–01-19 (accel./ decel. time).
V/F voltage is too high	Adjust the settings for Pr.01-01–01-02 (V/F curve), especially the setting value for the mid-point voltage (if the mid-point voltage is set too small, the load capacity decreases at low-speed).
Check if the motor rated current matches that on the motor nameplate.	Configure the correct rated current value of the motor again.
Check if the PTC is properly set and wired.	Check the connection between PTC-130 / KTY-84-130 and the heat protection.

Check if the setting for stall prevention is correct	Set the stall prevention to the proper value.
Unbalanced three-phase impedance of the motor	Replace the motor.
Use remedies to reduce harmonics.	Use remedies to reduce harmonics.

ID No.	Display on LED Keypad	Fault Name	Description
26	ot1	Over torque 1 (ot1)	When output current exceeds the over-torque detection level (Pr.06-07) and exceeds over-torque detection time (Pr.06-08), and when Pr.06-06 or Pr.06-09 is set to 2 or 4, the ot1 error displays.

Action and Reset		
Action condition	Pr.06-07	
Action time	Pr.06-08	
Fault treatment parameter	Pr.06-06 0: Disabled 1: Continue operation after over-torque detection during constant speed operation 2: Stop after over-torque detection during constant speed operation 3: Continue operation after over-torque detection during RUN 4: Stop after over-torque detection during RUN	
Reset method	Auto	“Warning” occurs when Pr.06-06 = 1 or 3. When output current < (Pr.06-07 – 5%), the ot1 warning automatically clears.
	Manual	“Error” occurs when Pr.06-06 = 2 or 4. You must reset manually.
Reset condition	Immediately reset	
Record	When Pr.06-06=2 or 4, ot1 is a fault, and the fault is recorded	

Cause	Corrective Actions
Incorrect parameter setting	Configure the settings for Pr.06-07 and 06-08 again.
Mechanical error (e.g., Mechanical lock due to over-torque)	Remove the causes of malfunction.
The load is too large	Decrease the loading. Replace with a motor with larger capacity.
Accel./ Decel. time and working cycle is too short.	Increase the setting values for Pr.01-12–01-19 (accel./ decel. time).
V/F voltage is too high	Adjust the settings for Pr.01-01–01-02 (V/F curve), especially the setting value for the mid-point voltage (if the mid-point voltage is set too small, the load capacity decreases at low-speed).
The motor capacity is too small	Replace with a motor with larger capacity.
Over-load during low-speed operation.	Decrease the load during low-speed operation. Increase the motor capacity.
The torque compensation is too large.	Readjust the torque compensation value (Pr.07-26 torque compensation gain) till the output current decreases and the motor does not stall.
Improper parameter settings for the speed tracking function (including restart after momentary power loss and restart after fault)	Correct the parameter settings for speed tracking. Start the speed tracking function. Adjust the maximum current for Pr.07-09 speed tracking.

ID No.	Display on LED Keypad	Fault Name	Description
28	uC	Under current (uC)	Low current detection

Action and Reset		
Action condition	Pr.06-71	
Action time	Pr.06-72	
Fault treatment parameter	Pr.06-73 0: Disabled 1: Fault and coast to stop 2: Fault and ramp to stop by the 2nd deceleration time 3: Warn and continue operation	
Reset method	Auto	“Warning” occurs when Pr.06-73 = 3. The “Warning” automatically clears when the output current is > (Pr.06-71+0.1A).
	Manual	“Error” occurs when Pr.06-73 = 1 or 2. You must reset manually.
Reset condition	Immediately reset	
Record	When Pr.06-71=1 or 2, uC is a fault, and the fault is recorded	

Cause	Corrective Actions
Broken motor cable	Troubleshoot the connection between the motor and the load.
Improper setting for the low current protection	Set the proper settings for Pr.06-71, Pr.06-72 and Pr.06-73.
The load is too low	Check the loading status. Make sure the loading matches the motor capacity.

ID No.	Display on LED Keypad	Fault Name	Description
31	cF2	EEPROM read error (cF2)	Internal EEPROM cannot be read
Action and Reset			
Action condition		Firmware internal detection	
Action time		cF2 acts immediately when the drive detects the fault	
Fault treatment parameter		No function	
Reset method		Manual reset	
Reset condition		Immediately reset	
Record		Yes	
Cause		Corrective Actions	
Internal EEPROM cannot be read		Press RESET key. If cF2 error still displays on the keypad, return to the factory for repair. Reset the parameter to the default setting. If cF2 error still displays on the keypad, return to the factory for repair. Cycle the power, if cF2 error still exists, return to the factory for repair.	

ID No.	Display on LED Keypad	Fault Name	Description
33	cd1	U-phase error (cd1)	U-phase current detection error when power is ON.

Action and Reset	
Action condition	Hardware detection
Action time	cd1 acts immediately when the drive detects the fault
Fault treatment parameter	N/A
Reset method	Power-off
Reset condition	No function
Record	Yes
Cause	**Corrective Actions**
Hardware error	Cycle the power. If cd1 still exists, return to the factory for repair.

ID No.	Display on LED Keypad	Fault Name	Description
34	cd2	V-phase error (cd2)	V-phase current detection error when power is ON.

Action and Reset	
Action condition	Hardware detection
Action time	cd2 acts immediately when the drive detects the fault
Fault treatment parameter	N/A
Reset method	Power-off
Reset condition	No function
Record	Yes
Cause	Corrective Actions
Hardware error	Cycle the power. If cd1 still exists, return to the factory for repair.

ID No.	Display on LED Keypad	Fault Name	Description
35	cd3	W-phase error (cd3)	W-phase current detection error when power is ON.

Action and Reset	
Action condition	Hardware detection
Action time	cd3 acts immediately when the drive detects the fault
Fault treatment parameter	N/A
Reset method	Power-off
Reset condition	No function
Record	Yes
Cause	**Corrective Actions**
Hardware error	Cycle the power. If cd1 still exists, return to the factory for repair.

ID No.	Display on LED Keypad	Fault Name	Description
36	Hd0	cc hardware failure (Hd0)	cc (current clamp) hardware protection error when power is ON.

Action and Reset	
Action condition	Hardware detection
Action time	Hd0 acts immediately when the drive detects the fault
Fault treatment parameter	N/A
Reset method	Power-off
Reset condition	No function
Record	Yes
Cause	Corrective Actions
Hardware error	Cycle the power. If cd1 still exists, return to the factory for repair.

ID No.	Display on LED Keypad	Fault Name	Description
37	Hd1	oc hardware error (Hd1)	oc hardware protection error when power is ON.

Action and Reset	
Action condition	Hardware detection
Action time	Hd1 acts immediately when the drive detects the fault
Fault treatment parameter	N/A
Reset method	Power-off
Reset condition	No function
Record	Yes
Cause	Corrective Actions
Hardware error	Cycle the power. If cd1 still exists, return to the factory for repair.

ID No.	Display on LED Keypad	Fault Name	Description
40	AUE	Auto-tuning error (AUE)	Motor auto-tuning error

Action and Reset	
Action condition	Hardware detection
Action time	Immediately act
Fault treatment parameter	N/A
Reset method	Manual reset
Reset condition	Immediately reset
Record	Yes

Cause	Corrective Actions
Press STOP key during auto-tuning.	Re-execute auto-tuning.
Incorrect motor capacity (too large or too small) and parameter setting	Check motor capacity and related parameters. Set the correct parameters, that is Pr.01-01–Pr.01-02. Set Pr.01-00 larger than the motor rated frequency.
Incorrect motor wiring	Check the wiring.
Motor locked.	Troubleshoot the motor shaft lock.
The electromagnetic contactor is ON at output side (U/V/W) of the drive	Make sure the magnetic contactor is OFF.
The load is too large	Decrease the loading. Replace with a motor with larger capacity.
Accel./Decel. time is too short	Increase the setting values for Pr.01-12–01-19 (accel./ decel. time).

ID No.	Display on LED Keypad	Fault Name	Description
41	AFE	PID loss ACI (AFE)	PID feedback loss (analog feedback signal is only valid when the PID function is enabled.)

Action and Reset		
Action condition	When the analog input is lower than 4 mA (only detects analog input 4–20 mA).	
Action time	Pr.08-08	
Fault treatment parameter	Pr.08-09 0: Warn and continue operation 1: Fault and ramp to stop 2: Fault and coast to stop 3: Warn and operate at last frequency	
Reset method	Auto	“Warning” occurs when Pr.08-09 = 3 or 4. The “Warning” automatically clears when the feedback signal is larger than 4 mA.
	Manual	“Error” occurs when Pr.08-09 = 1 or 2. You must reset manually.
Reset condition	Immediately reset	
Record	Records when Pr.08-09 = 1 or 2 (“Error”). Does not record when Pr.08-09 = 0 or 3 (“Warning”).	

Cause	Corrective Actions
Loose or broken PID feedback wiring	Tighten the terminals again. Replace with a new cable.
Feedback device malfunction	Replace with a new feedback device.
Hardware error	Check all the wiring. If AFE fault still exists, return to the factory for repair.

ID No.	Display on LED Keypad	Fault Name	Description
48	ACE	ACI loss (ACE)	Analog input current loss (including all analog 4–20 mA signals)

Action and Reset		
Action condition	When the analog input is lower than 4 mA (only detects analog input 4–20 mA).	
Action time	Immediately act	
Fault treatment parameter	Pr.03-19 0: Disabled 1: Continue operation at the last frequency (a warning, the keypad displays “ANL”) 2: Decelerate to 0 Hz (warning, the keypad displays “ANL”) 3: Stop immediately and display ACE (an error)	
Reset method	Auto	“Warning” occurs when Pr.03-19 = 1 or 2. The “Warning automatically clears when the analog input signal is larger than 4 mA.
	Manual	“Error” occurs when Pr.03-19 = 3. You must reset manually.
Reset condition	Immediately reset	
Record	Records when Pr.03-19 = 3 (“Error”). Does not record when Pr.03-19 = 1 or 2 (“Warning”).	

Cause	Corrective Actions
Loose or broken ACI wiring	Tighten the terminals again. Replace with a new cable.
External device error	Replace with a new device.
Hardware error	Check all the wiring. If ACE still exists, return to the factory for repair.

ID No.	Display on LED Keypad	Fault Name	Description
49	EF	External Fault (EF)	External fault. When the drive decelerates based on the setting of Pr.07-20, the EF fault displays on the keypad
Action and Reset			
Action condition		MI = EF and the MI terminal is ON.	
Action time		Immediately act	
Fault treatment parameter		Pr.07-20 0: Coast to stop 1: Stop by the first deceleration time 2: Stop by the second deceleration time 3: Stop by the third deceleration time 4: Stop by the fourth deceleration time 5: System deceleration (according to the original deceleration time setting) 6: Automatic deceleration (Pr.01-46)	
Reset method		Manual reset	
Reset condition		Manual reset only after the external fault is cleared (terminal status is recovered).	
Record		Yes	
Cause		Corrective Actions	
External fault		Press RESET key after the fault is cleared.	

ID No.	Display on LED Keypad	Fault Name	Description
51	bb	External base block (bb)	When the contact of MI = bb is ON, the output stops immediately and displays bb on the keypad. The motor is in free running.
Action and Reset			
Action condition		MI=bb and the MI terminal is ON.	
Action time		Immediately act	
Fault treatment parameter		N/A	
Reset method		The display “bb” is automatically cleared after the fault is cleared.	
Reset condition		No function	
Record		N/A	
Cause		Corrective Actions	
MIx = bb activates		Verify if the system is back to normal condition, and then press RESET key to return to the default.	

ID No.	Display on LED Keypad	Fault Name	Description
52	Pcod	Password is locked (Pcod)	Enter the wrong password three consecutive times

Action and Reset	
Action condition	Entering the wrong password three consecutive times
Action time	Immediately act
Fault treatment parameter	N/A
Reset method	Manual reset
Reset condition	Power-off
Record	Yes
Cause	**Corrective Actions**
Incorrect password input through Pr.00-07	1. Input the correct password after rebooting the motor drive. 2. If you forget the password, enter 9999. 3. Press ENTER, and then enter 9999 again. 4. You must finish pressing ENTER within 10 seconds. If not, you must repeat the entering. After you successfully unlock the password, the parameter settings return to the default.

ID No.	Display on LED Keypad	Fault Name	Description
54	CE1	Illegal command (CE1)	Communication command is illegal

Action and Reset	
Action condition	When the function code is not 03, 06, 10 and 63.
Action time	Immediately act
Fault treatment parameter	N/A
Reset method	Manual reset
Reset condition	Immediately reset
Record	N/A
Cause	**Corrective Actions**
Incorrect communication command from upper unit	Check if the communication command is correct.
Malfunction caused by interference	Verify the wiring and grounding of the communication circuit. It is recommended to separate the communication circuit from the main circuit, or wire in 90 degrees for effective anti-interference performance.
Different communication setting from the upper unit	Check if the setting for Pr.09-01, Pr.09-04 are the same as the setting for the upper unit.
Disconnection or bad connection of the cable	Check the cable and replace it if necessary.

ID No.	Display on LED Keypad	Fault Name	Description
55	CE2	Illegal data address (CE2)	Data address is illegal.

Action and Reset	
Action condition	When the data address is correct.
Action time	Immediately act
Fault treatment parameter	N/A
Reset method	Manual reset
Reset condition	Immediately reset
Record	N/A

Cause	Corrective Actions
Incorrect communication command from upper unit	Check if the communication command is correct.
Malfunction caused by interference	Verify the wiring and grounding of the communication circuit. It is recommended to separate the communication circuit from the main circuit, or wire in 90 degrees for effective anti-interference performance.
Different communication setting from the upper unit	Check if the setting for Pr.09-01, Pr.09-04 are the same as the setting for the upper unit.
Disconnection or bad connection of the cable	Check the cable and replace it if necessary.

ID No.	Display on LED Keypad	Fault Name	Description
56	CE3	Illegal data value (CE3)	Data value is illegal

Action and Reset	
Action condition	When the length of communication data is too long.
Action time	Immediately act
Fault treatment parameter	N/A
Reset method	Manual reset
Reset condition	Immediately reset
Record	N/A

Cause	Corrective Actions
Incorrect communication command from upper unit	Check if the communication command is correct.
Malfunction caused by interference	Verify the wiring and grounding of the communication circuit. It is recommended to separate the communication circuit from the main circuit, or wire in 90 degrees for effective anti-interference performance.
Different communication setting from the upper unit	Check if the setting for Pr.09-01, Pr.09-04 are the same as the setting for the upper unit.
Disconnection or bad connection of the cable	Check the cable and replace it if necessary.

ID No.	Display on LED Keypad	Fault Name	Description
57	CE4	Data is written to read-only address (CE4)	Data is written to read-only address.
Action and Reset			
Action condition		When the data is written to read-only address.	
Action time		Immediately act	
Fault treatment parameter		N/A	
Reset method		Manual reset	
Reset condition		Immediately reset	
Record		N/A	
Cause		Corrective Actions	
Incorrect communication command from upper unit		Check if the communication command is correct.	
Malfunction caused by interference		Verify the wiring and grounding of the communication circuit. It is recommended to separate the communication circuit from the main circuit, or wire in 90 degrees for effective anti-interference performance.	
Different communication setting from the upper unit		Check if the setting for Pr.09-01, Pr.09-04 are the same as the setting for the upper unit.	
Disconnection or bad connection of the cable		Check the cable and replace it if necessary.	

ID No.	Display on LED Keypad	Fault Name	Description
58	CE 10	Modbus transmission time-out (CE10)	Modbus transmission time-out occurs
Action and Reset			
Action condition		When the communication time exceeds the detection time for Pr.09-03 communication time-out.	
Action time		Pr.09-03	
Fault treatment parameter		Pr.09-02 0: Warn and continue operation 1: Fault and ramp to stop 2: Fault and coast to stop 3: No Warn and continue operation	
Reset method		Manual reset	
Reset condition		Immediately reset	
Record		Yes	
Cause		Corrective Actions	
The upper unit does not transmit the communication command within Pr.09-03 setting time.		Check if the upper unit transmits the communication command within the setting time for Pr.09-03.	
Malfunction caused by interference		Verify the wiring and grounding of the communication circuit. It is recommended to separate the communication circuit from the main circuit, or wire in 90 degrees for effective anti-interference performance.	
Different communication setting from the upper unit		Check if the setting for Pr.09-01, Pr.09-04 are the same as the setting for the upper unit.	
Disconnection or bad connection of the cable		Check the cable and replace it if necessary.	

ID No.	Display on LED Keypad	Fault Name	Description
63	oSL	Over slip error (oSL)	The slip is abnormal that use the maximum slip (Pr.10-29) as the base. oSL occurs when the drive outputs at the constant speed, F > H or F < H is over the level of Pr.07-29, and exceed the time set by Pr.07-30. oSL only occurs when using general induction motors.

Action and Reset	
Action condition	Pr.07-29 (100% of Pr.07-29 = Pr.10-29 upper limit of frequency deviation)
Action time	Pr.07-30
Fault treatment parameter	Pr. 07-31 0: Warn and continue operation 1: Fault and ramp to stop 2: Fault and coast to stop 3: No warning
Reset method	When Pr.07-31 = 1 or 2, oSL is a “fault” and need to reset manually.
Reset condition	Immediately reset
Record	Yes

Cause	Corrective Actions
Motor parameter is incorrect	Check the motor parameter
The load is too large	Reduce the load
Check if the settings for Pr.07-29, Pr.07-30 and Pr.10-29 are properly set	Check the parameter settings for oSL protection

ID No.	Display on LED Keypad	Fault Name	Description
79	Aoc	U-phase over-current before run (Aoc)	U-phase short circuit detected when output wiring detection is performed before the drive runs.

Action and Reset	
Action condition	240% of the rated current
Action time	Immediately act
Fault treatment parameter	N/A
Reset method	Manual reset
Reset condition	Reset in five seconds after the fault is cleared
Record	Yes
Cause	**Corrective Actions**
Incorrect wiring for the motor	Check if the motor's internal wiring and the UVW wiring of the drive output terminal are correct.
Short-circuit at motor output due to poor insulation wiring	Check the motor cable and remove causes of the short circuits, or replace the cable before turning on the power.
Check for possible burnout or aging insulation of the motor	Check the motor insulation value with megger. Replace the motor if the insulation is poor.
Malfunction caused by interference	Verify wiring of the control circuit, and wiring / grounding of the main circuit to prevent interference.
The length of motor cable is too long	Increase the drive capacity. Install AC reactor(s) on the output side (U/V/W).
Hardware error	The Aoc occurs due to the short circuit or ground fault at the output side of the drive. Check for possible short circuits between terminals with the electric meter: B1 corresponds to U, V and W; DC- corresponds to U, V and W; ⏚ corresponds to U, V and W. If short circuit occurs, return to the factory for repair.

ID No.	Display on LED Keypad	Fault Name	Description
80	boc	V-phase over-current before run (boc)	V-phase short circuit detected when output wiring detection is performed before the drive runs.
Action and Reset			
Action condition		240% of the rated current	
Action time		Immediately act	
Fault treatment parameter		N/A	
Reset method		Manual reset	
Reset condition		Reset in five seconds after the fault is cleared	
Record		Yes	
Cause		Corrective Actions	
Incorrect wiring for the motor		Check if the motor's internal wiring and the UVW wiring of the drive output terminal are correct.	
Short-circuit at motor output due to poor insulation wiring		Check the motor cable and remove causes of the short circuits, or replace the cable before turning on the power.	
Check for possible burnout or aging insulation of the motor		Check the motor insulation value with megger. Replace the motor if the insulation is poor.	
Malfunction caused by interference		Verify wiring of the control circuit, and wiring/grounding of the main circuit to prevent interference.	
The length of motor cable is too long		Increase the drive capacity. Install AC reactor(s) on the output side (U/V/W).	
Hardware error		The Boc occurs due to the short circuit or ground fault at the output side of the drive. Check for possible short circuits between terminals with the electric meter: B1 corresponds to U, V and W; DC- corresponds to U, V and W; ⏚ corresponds to U, V and W. If short circuit occurs, return to the factory for repair.	

ID No.	Display on LED Keypad	Fault Name	Description
81	Coc	W-phase over-current before run (Coc)	W-phase short circuit detected when output wiring detection is performed before the drive runs.
Action and Reset			
Action condition		240% of the rated current	
Action time		Immediately act	
Fault treatment parameter		N/A	
Reset method		Manual reset	
Reset condition		Reset in five seconds after the fault is cleared	
Record		Yes	
Cause		Corrective Actions	
Incorrect wiring for the motor		Check if the motor's internal wiring and the UVW wiring of the drive output terminal are correct.	
Short-circuit at motor output due to poor insulation wiring		Check the motor cable and remove causes of the short circuits, or replace the cable before turning on the power.	
Check for possible burnout or aging insulation of the motor		Check the motor insulation value with megger. Replace the motor if the insulation is poor.	
Malfunction caused by interference		Verify wiring of the control circuit, and wiring/grounding of the main circuit to prevent interference.	
The length of motor cable is too long		Increase the drive capacity. Install AC reactor(s) on the output side (U/V/W).	
Hardware error		The Coc occurs due to the short circuit or ground fault at the output side of the drive. Check for possible short circuits between terminals with the electric meter: B1 corresponds to U, V and W; DC- corresponds to U, V and W; ⏚ corresponds to U, V and W. If short circuit occurs, return to the factory for repair.	

ID No.	Display on LED Keypad	Fault Name	Description
82	oPL 1	Output phase loss U phase (oPL1)	U phase output phase loss
Action and Reset			
Action condition		Pr.06-47	
Action time		Pr.06-46 Pr.06-48: Use the setting value of Pr.06-48 first. If DC braking function activates, use that of Pr.06-46.	
Fault treatment parameter		Pr.06-45 0: Warn and continue operation 1: Fault and ramp to stop 2: Fault and coast to stop 3: No warning	
Reset method		Manual reset	
Reset condition		Immediately reset	
Record		When Pr.06-45=1 or 2, OPL1 is a “Fault”, and the fault is recorded.	
Cause		Corrective Actions	
Unbalanced three-phase impedance of the motor		Replace the motor.	
Check if the wiring is incorrect.		Check the cable. Replace the cable. Check the motor’s internal wiring. If the fault still exists, replace the motor.	
Check if the motor is a single-phase motor.		Choose a three-phase motor.	
Check if the current sensor is broken.		Check if the control board cable is loose. If yes, reconnect the cable and run the drive to test. If the error still occurs, send the drive back to the factory for repair. Check if the three-phase current is balanced with a current clamp meter. If the current is balanced and the OPHL error still shows on the display, send the drive back to the factory for repair.	
Check if the drive capacity is larger than the motor capacity		Choose the drive that matches the motor capacity.	

ID No.	Display on LED Keypad	Fault Name	Description
83	oPL2	Output phase loss V phase (oPL2)	V phase output phase loss
Action and Reset			
Action condition		Pr.06-47	
Action time		Pr.06-46 Pr.06-48: Use the setting value of Pr.06-48 first. If DC braking function activates, use that of Pr.06-46.	
Fault treatment parameter		Pr.06-45 0: Warn and continue operation 1: Fault and ramp to stop 2: Fault and coast to stop 3: No warning	
Reset method		Manual reset	
Reset condition		Immediately reset	
Record		When Pr.06-45 = 1 or 2, OPL1 is a “Fault”, and the fault is recorded.	
Cause		Corrective Actions	
Unbalanced three-phase impedance of the motor		Replace the motor.	
Check if the wiring is incorrect.		Check the cable. Replace the cable. Check the motor’s internal wiring. If the fault still exists, replace the motor.	
Check if the motor is a single-phase motor.		Choose a three-phase motor.	
Check if the current sensor is broken.		Check if the control board cable is loose. If yes, reconnect the cable and run the drive to test. If the error still occurs, send the drive back to the factory for repair. Check if the three-phase current is balanced with a current clamp meter. If the current is balanced and the OPHL error still shows on the display, send the drive back to the factory for repair.	
Check if the drive capacity is larger than the motor capacity		Choose the drive that matches the motor capacity.	

ID No.	Display on LED Keypad	Fault Name	Description
84	oPL3	Output phase loss W phase (oPL3)	W phase output phase loss
Action and Reset			
Action condition		Pr.06-47	
Action time		Pr.06-46 Pr.06-48: Use the setting value of Pr.06-48 first. If DC braking function activates, use that of Pr.06-46.	
Fault treatment parameter		Pr.06-45 0: Warn and continue operation 1: Fault and ramp to stop 2: Fault and coast to stop 3: No warning	
Reset method		Manual reset	
Reset condition		Immediately reset	
Record		When Pr.06-45 = 1 or 2, OPL1 is a “Fault”, and the fault is recorded.	
Cause		Corrective Actions	
Unbalanced three-phase impedance of the motor		Replace the motor.	
Check if the wiring is incorrect.		Check the cable. Replace the cable. Check the motor’s internal wiring. If the fault still exists, replace the motor.	
Check if the motor is a single-phase motor.		Choose a three-phase motor.	
Check if the current sensor is broken.		Check if the control board cable is loose. If yes, reconnect the cable and run the drive to test. If the error still occurs, send the drive back to the factory for repair. Check if the three-phase current is balanced with a current clamp meter. If the current is balanced and the OPHL error still shows on the display, send the drive back to the factory for repair.	
Check if the drive capacity is larger than the motor capacity		Choose the drive that matches the motor capacity.	

ID No.	Display on LED Keypad	Fault Name	Description
87	oL3	Low frequency overload protection (oL3)	Low frequency and high current protection

Action and Reset	
Action condition	Software detection
Action time	Immediately act
Fault treatment parameter	N/A
Reset method	Manual reset
Reset condition	Immediately reset
Record	Yes
Cause	Corrective Actions
Power module overload	1. Reduce the motor drive's load. 2. Decrease the carrier frequency (Pr.00-17). 3. Enhance the heat dissipation capacity for the cabinet. 4. Increases acceleration time. 5. Choose motor drives with lager power. 6. Lower the limited value of current (Pr.06-03, 06-04).

ID No.	Display on LED Keypad	Fault Name	Description
89	rOPd	Rotor position detection error (RoPd)	Rotor position detection error protection
Action and Reset			
Action condition		Reset the software	
Action time		Immediately act	
Fault treatment parameter		N/A	
Reset method		Manual reset	
Reset condition		Immediately reset	
Record		Yes	
Cause		Corrective Actions	
Check if the motor cable is abnormal or broken		Check or replace the cable.	
Motor coil error		Replace the motor.	
Hardware error		IGBT broken. Return to the factory for repair.	
Drive's current feedback line error		Cycle the power. If RoPd still occurs during operation, return to the factory for repair.	

ID No.	Display on LED Keypad	Warning Name	Description
90	FStP	Force to stop (FStp)	Keypad forces PLC to Stop

Action and Reset	
Action condition	When Pr. 00-32=1, STOP button on the keypad is valid. When giving the STOP command during the PLC operation, FStp fault occurs.
Action time	Immediately act
Fault treatment parameter	N/A
Reset method	Manual reset
Reset condition	Can be reset after shutdown
Record	Yes
Detection time	Detect when powering ON
Cause	Corrective Actions
Pr. 00-32=1: keypad STOP button is valid	Check if it is necessary to set Pr. 00-32=0, so the keypad STOP button is invalid.
Press STOP button during PLC operation	Verify the timing of STOP function.

ID No.	Display on LED Keypad	Fault Name	Description
98	Fire	Fire mode output (Fire)	Display when fire mode is triggered
Action and Reset			
Action level		MIx = 58 is triggered and run, or MIx = 59 is triggered	
Action time		Immediately act	
Fault treatment parameter		Refer to Pr.06-81, Pr.06-88 to set the operating frequency and the operation times in fire mode	
Reset method		Manual reset	
Reset condition		Reset in five seconds after the fault is cleared	
Record		Yes	
Cause		Corrective Actions	
MIx = 58 is triggered and run, or MIx = 59 is triggered		If it is triggered in four minutes, then cancel MI setting. If it is triggered over four minutes, then re-power ON.	

ID No.	Display on LED Keypad	Fault Name	Description
140	Hd6	oc hardware error (Hd6)	The ground current short circuit detected when power is ON.

Action and Reset	
Action condition	Software detection
Action time	Immediately act
Fault treatment parameter	N/A
Reset method	Manual reset
Reset condition	Immediately reset
Record	Yes

Cause	Corrective Actions
The length of motor cable is too long.	Use a shorter cable or install an output reactor.
Check if the motor cable is abnormal or broken	Check or replace the cable.
Hardware error	IGBT broken. Return to the factory for repair.
Drive's current feedback line error	Cycle the power. If Hd6 still occurs during operation, return to the factory for repair.

ID No.	Display on LED Keypad	Fault Name	Description
141	b4GFF	GFF occurs before run (b4GFF)	The ground short circuit detected when output wiring detection is performed before the drive runs.
Action and Reset			
Action condition		240% of the rated current	
Action time		Immediately act	
Fault treatment parameter		N/A	
Reset method		Manual reset	
Reset condition		Reset in five seconds after the fault is cleared	
Record		Yes	
Cause		Corrective Actions	
Incorrect wiring for the motor		Check if the motor's internal wiring and the UVW wiring of the drive output terminal are correct.	
Short-circuit at motor output due to poor insulation wiring		Check the motor cable and remove causes of the short circuits, or replace the cable before turning on the power.	
Check for possible burnout or aging insulation of the motor		Check the motor insulation value with megger. Replace the motor if the insulation is poor.	

ID No.	Display on LED Keypad	Fault Name	Description
142	AUE 1	Auto-tuning error (AUE1)	No feedback current error when motor parameter automatically detects.

Action and Reset	
Action condition	Software detection
Action time	Immediately act
Fault treatment parameter	N/A
Reset method	Manual reset
Reset condition	Immediately reset
Record	Yes
Cause	Corrective Actions
Motor is not wired	Check the wiring.
The electromagnetic contactor is ON at output side (U/V/W) of the drive	Make sure the magnetic contactor is OFF.

ID No.	Display on LED Keypad	Fault Name	Description
143	AUE2	Auto-tuning error (AUE2)	Motor phase loss error when motor parameter automatically detects.

Action and Reset	
Action condition	Software detection
Action time	Immediately act
Fault treatment parameter	N/A
Reset method	Manual reset
Reset condition	Immediately reset
Record	Yes
Cause	Corrective Actions
Incorrect motor wiring	Check the wiring.
Motor error	Check if the motor works normally.
The electromagnetic contactor is ON at output side (U/V/W) of the drive	Verify that the three-phases of the magnetic contactor are all closed.
Motor U/V/W wire error	Check if the wires are broken.

ID No.	Display on LED Keypad	Fault Name	Description
144	AUE3	Auto-tuning error (AUE3)	No load current I0 measurement error when motor parameter automatically detects.

Action and Reset	
Action condition	Software detection
Action time	Immediately act
Fault treatment parameter	N/A
Reset method	Manual reset
Reset condition	Immediately reset
Record	Yes
Cause	Corrective Actions
Incorrect settings for the motor parameter (rated current)	Check the settings for Pr.05-01 / Pr.05-13 / Pr.05-34.
Motor error	Check if the motor works normally.

ID No.	Display on LED Keypad	Fault Name	Description
221	HPS	High water pressure (HPS)	The water pressure is Higher than the setting

Action and Reset	
Action condition	The feedback pressure is higher than the setting in Pr.12-79, and continues as the time setting in Pr.12-80.
Action time	Pr.12-80
Warning setting parameter	Pr.12-81 1: Fault and coast to stop 2: Fault and ramp to stop
Reset method	Manual reset
Reset condition	Immediately reset
Record	Yes
Cause	Corrective Actions
Pressure sensor is broken	Change the pressure sensor.
The disconnection frequency setting of pump is too high	Decrease the setting value in Pr.12-12

ID No.	Display on LED Keypad	Fault Name	Description
222	LPSE	Low water pressure (LPSE)	The water pressure is lower than the setting

Action and Reset	
Action condition	The feedback pressure is lower than the setting in Pr.12-82, and continues as the time setting in Pr.12-83.
Action time	Pr.12-83
Fault treatment parameter	Pr.12-84 1: Fault and coast to stop 2: Fault and ramp to stop
Reset method	Manual reset
Reset condition	Immediately reset
Record	Yes
Cause	Corrective Actions
No water pressure	Check if water leakage occurs in pipe, or no water inputs
Pressure sensor is broken	Change the pressure sensor.

ID No.	Display on LED Keypad	Fault Name	Description
223	dr yE	Dry pump (dryE)	Dry pump continues when the restart times is larger than the setting in Pr.12-71

Action and Reset	
Action condition	The power corresponds to the target frequency is under the dry pump curve.
Action time	Pr.12-69
Fault treatment parameter	Fault and coast to stop
Reset method	Manual reset
Reset condition	Immediately reset
Record	Yes
Cause	Corrective Actions
The inlet of the water pump is broken	Check if the pipe is broken, or no water input.

ID No.	Display on LED Keypad	Fault Name	Description
224	LEKE	Water leaking (pipe explosion) (LEKE)	Triggered when heavy water leakage is detected
Action and Reset			
Action condition		The feedback pressure is lower than the setting in Pr.12-73, and the load current is larger than the setting in Pr.12-75	
Action time		Pr.12-74	
Fault treatment parameter		Pr.12-76 1: Fault and coast to stop 2: Fault and ramp to stop	
Reset method		Manual reset	
Reset condition		Immediately reset	
Record		Yes	
Cause		Corrective Actions	
The outlet of the water pump is broken		Check if the pipe is broken.	

ID No.	Display on LED Keypad	Fault Name	Description
225	JAME	Clogged pipe (JAME)	The jam current is still higher than Pr.12-54 after finishing the cleaning process
Action and Reset			
Action condition		The current is still larger than then setting in Pr.12-54 when the cleaning times reaches the setting in Pr.12-58.	
Action time		No function	
Fault treatment parameter		Immediately coast to stop	
Reset method		Manual reset	
Reset condition		Immediately reset	
Record		Yes	
Cause		Corrective Actions	
The pump vane is stuck by foreign matter		The clean function cannot clear the foreign matter, you have to clear it manually.	

ID No.	Display on LED Keypad	Fault Name	Description
226	rtF	RTC error (rtF)	Remind user that there is hardware problem of the perpetual calendar
Action and Reset			
Action level		No function	
Action time		Immediately displays when the fault is detected	
Fault treatment parameter		N/A	
Reset method		No function	
Reset condition		Power OFF and then power ON again	
Record		Yes	
Cause		Corrective Actions	
Hardware problem of the perpetual calendar		Power ON again, if it doesn't work, contact with dealer or original manufacturer.	

ID No.	Display on LED Keypad	Fault Name	Description
227	dAUE	Dry pump curve auto-measuring (dAUE)	The high speed power cannot lower than the low speed power, and cannot over the drive power. Give STOP command when fault occurs during auto-detection. High speed power Pr.12-67; low speed power Pr.12-66

Action and Reset	
Action condition	The power after adjusting does not comply with the power value
Action time	Immediately act
Fault treatment parameter	Fault and coast to stop
Reset method	Manual reset
Reset condition	Immediately reset, does not memorize parameter
Record	Yes
Cause	Corrective Actions
The value auto-detect by the dry pump curve is abnormal	Restart the auto-tuning load curve, set Pr.12-65 = 1 to execute the auto-tuning.

Chapter 15 PLC Function Applications

15-1 PLC Summary

15-2 Notes before Using PLC

15-3 Start-up

15-4 Basic Principles of PLC Ladder Diagrams

15-5 Functions of Various PLC Devices

15-6 Introduction to the Functions of Instructions

15-7 Fault Display and Treatment

15-8 Explanation of Speed Mode Control with PLC

15-9 The Applications for Remote IO Control of Modbus (Use MODRW)

15-10 RTC (real-time clock)

15-11 Enable The Built-in PLC Function of MPD (Scheduled Function, Multi-master Function)

15-12 Function Block Diagram (FBD)

15-1 PLC Summary

15-1-1 Introduction

The commands provided by the MP300's built-in PLC functions, including the ladder diagram editing tool WPLSoft, as well as the usage of basic commands and applications commands, mainly retain the operating methods of Delta's PLC DVP series.

15-1-2 WPLSoft Ladder Diagram Editing Tool

WPLSoft is a program editing software used under WINDOWS operating system in Delta's DVP Series PLC for MP300. WPLSoft not only provides functions of PLC program planning and Windows editing (such as cut, paste, copy, multi-window, etc.), but also Chinese / English notes editing function and other useful functions like register editing & setting, file reading & saving, as well as points diagram monitoring and setting, and so on.

Minimum system requirements for installing WPLSoft software:

Item	System Requirements
Operating System	Windows 95 / 98 / 2000 / NT / ME / XP
CPU	Pentium 90 above
Storage	16MB above (32MB above recommended)
Drive	Disk space: 100MB above at a minimum An optical disc drive (for installing WPLSoft)
Display	Resolution: 640 × 480, 16 colors above. It is recommended to set screen width × height to 800 × 600 pixels.
Mouse	Mouse for general purposes or compatible with Windows
Printer	Printers with Windows drivers
RS-485 Port	At least one RS-485 port that can be connected with PLC

15-2 Notes before Using PLC

1. MP300 provides COM2 port to upload / download PLC programs. See the figure below.
   The PLC has a preset communications format of 7, N, 2, 9600, with node 100; the PLC node can be changed in Pr. 09-35, but this address may not be the same as the drive's address setting of Pr. 09-00.
   When the built-in PLC is ON, the communication format of COM1 automatically sets as 115200, 8, E, 1 RTU for connecting multi-pump in serial.

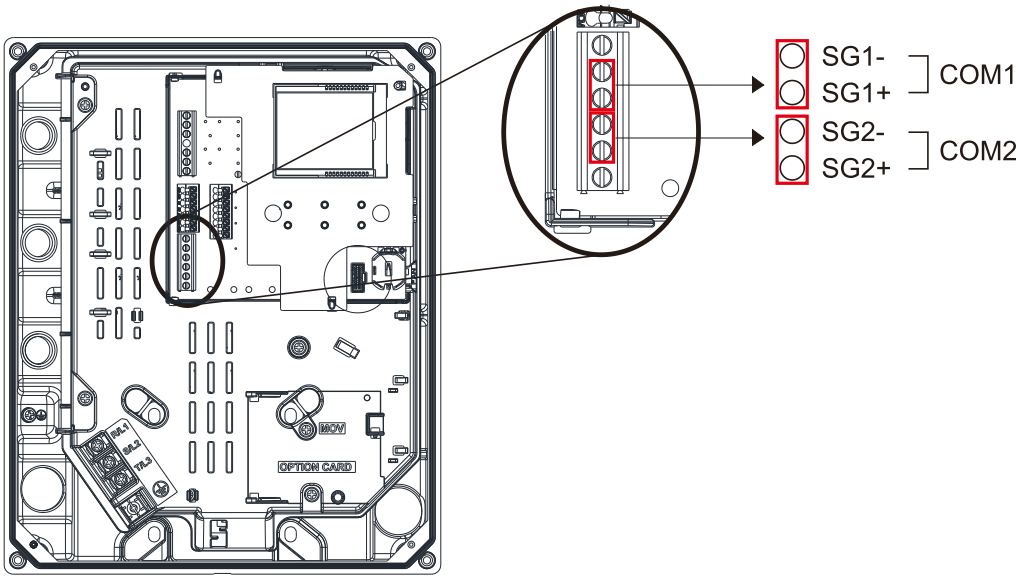

2. The client can simultaneously access data from the converter and internal PLC, which is performed through identification of the node. For instance, if the converter node is 1 and the internal PLC node is 2, then the client command will be
   01 (node) 03 (read) 0400 (address) 0001 (1 data item), indicating that it must read the data in converter Pr. 04-00
   02 (node) 03 (read) 0400 (address) 0001 (1 data item), indicating that it must read the data in internal PLC X0
3. The PLC program will be disabled when uploading / downloading programs.
4. When using WPR commands to write in parameters, note that allowable maximum number of times to change is 10^9. Otherwise, a memory writing error may occur. The number of times to change depends on the writing value to be changed. If the writing value is not changed, the number of times will not be counted accumulatively; if the writing value is different from the last time, it will be counted as one time.
5. When Pr. 00-04 is set as 28, the displayed value will be the value of PLC register D1043.
6. In the PLC Run (PLC1) and PLC Stop (PLC1) mode, the content 9 and 10 of Pr. 00-02 cannot be set and cannot be reset to the default value.
7. If PLC function is OFF (PLC0), PLC can return to the default when Pr.00-02 = 6.
8. The corresponding MI function will be disabled when the PLC writes to input contact X.

9. When the PLC controls converter operation, control commands will be entirely controlled by the PLC and will not be affected by the setting of Pr. 00-21.
10. When the PLC controls converter frequency commands (FREQ commands), frequency commands will be entirely controlled by the PLC, and will not be affected by the setting of Pr.00-20 or the Hand ON / OFF configuration.
11. When the PLC controls converter operation, if the keypad Stop setting is valid, this will trigger an FStP error and cause stoppage.

15-3 Start-up

15-3-1 Connect to PC

Start operation of PLC functions in accordance with the following steps

1. Wiring: Connect the drive's RJ45 communications interface to a PC via the RS-485.

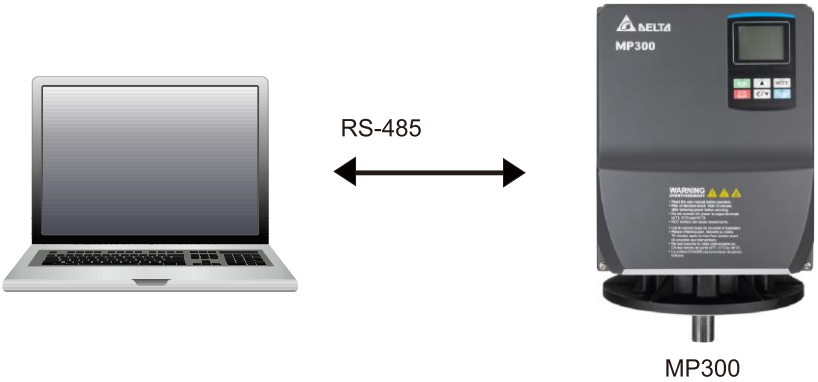

2. PLC function usage

Enter to PLC mode to set PLC1
PLC0: Disable PLC function
PLC1: Trigger PLC RUN
PLC2: Trigger PLC STOP

- When the external multifunctional input terminals (MI1–MI4) are in PLC Mode select bit0 (51) or PLC Mode select bit1 (52), and the terminal contact is closed or opened, it will compulsorily switch to the PLC mode, and keypad switching will be ineffective. Corresponding actions are as follows:

PLC mode	PLC Mode select bit1 (52)	PLC Mode select bit0 (51)
Disable	OFF	OFF
PLC Run	OFF	ON
PLC Stop	ON	OFF
Maintain previous state	ON	ON

NOTE:

1. When input / output terminals (MI1–MI4, Relay1, Relay2, MO) are included in the PLC program, these input / output terminals will only be used by the PLC. As an example, when the PLC program controls Y0 during PLC operation (PLC1 or PLC2), the corresponding output terminal relay (RA / RB / RC) will operate in accordance with the program. At this moment, the multifunctional input/ output terminal setting will be ineffective. Because these terminal functions are already being used by the PLC, the DI / DO / AO in use by the PLC can be determined by looking at Pr.02-52, Pr.02-53, and Pr.03-30.
2. When the PLC's procedures use special register D1040, the corresponding AO contact AFM1 will be occupied.
3. Pr. 03-30 monitors the state of action of the PLC function analog output terminal.

15-3-2 I/O Device Correspondence

Input devices:

PLC Input relay	X0	X1	X2	X3
AC motor drive input terminal	MI1	MI2	MI3	MI4

Output devices

PLC Output relay	Y0	Y1	Y2	Y3
AC motor drive output terminal	RY1	RY2		MO

RY1 / RY2

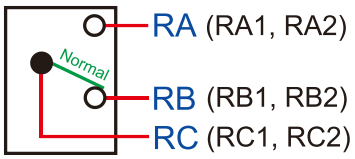

15-3-3 WPLSoft Installation

Visit the download center at Delta's website to download and install the software WPLSoft: After finishing installation, WPLSoft program will be created in the specified default sub-directory under "C:\Program Files\Delta Industrial Automation\WPLSoft x.xx".

15-3-4 Program Writing

Step 1. Click on the WPLSoft icon to start the editing software (see Figure 15-1).

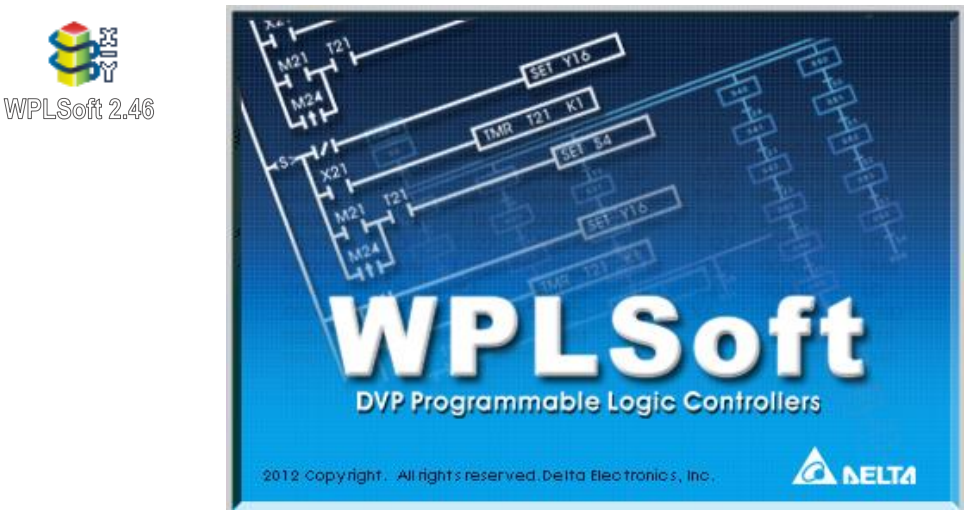

Figure 15-1 (Left: WPLSoft icon; right: WPLSoft starting page)

Step 2: **WPLsoft Editor** window appears (see Figure 15-2). When running WPLSoft for the first time, as there is no existing file, only **File (F)**, **Communication (C)**, **View (V)**, **Options (O)**, and **Help (H)** are available on the function menu.

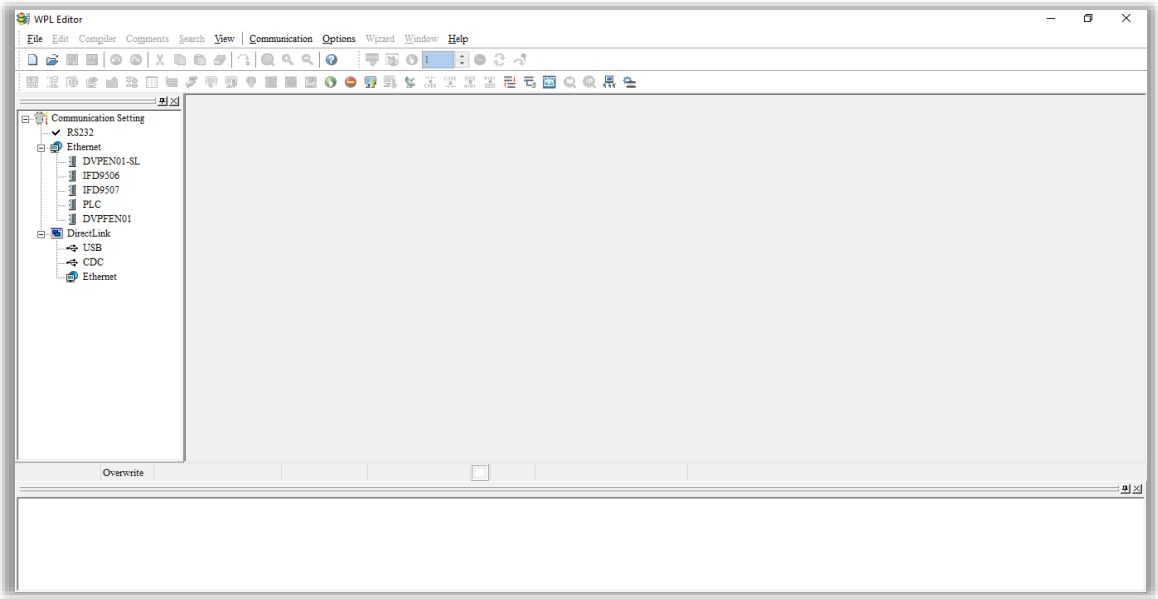

Figure 15-2

NOTE: When starting WPLSoft for the second time, the last editing file will be opened directly and displayed in the editor window. WPLSoft editor window is described as Figure 15-3.

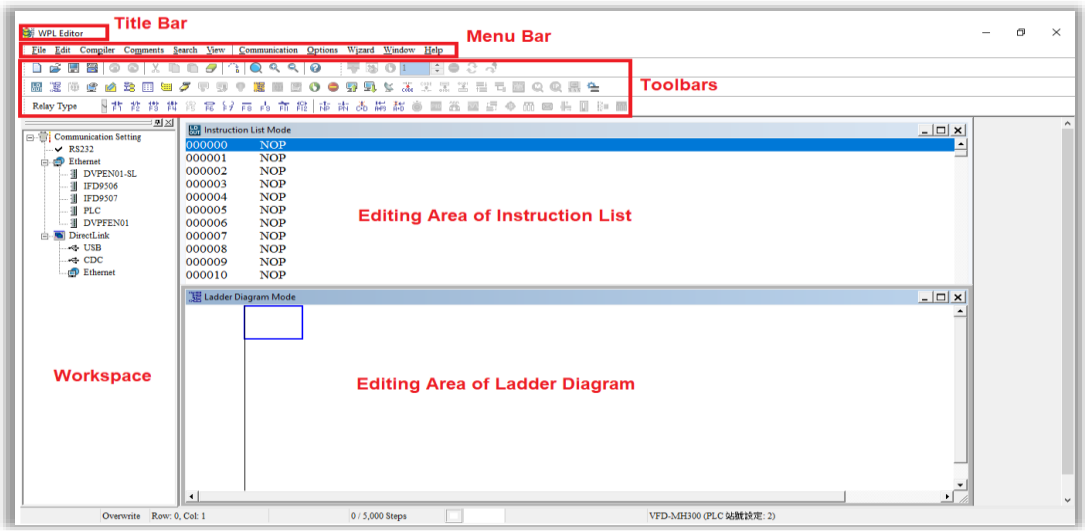

Figure 15-3

Step 3. Click on the button on the toolbar: **New (Ctrl+N)** to open a new file, as Figure 15-4 shows.

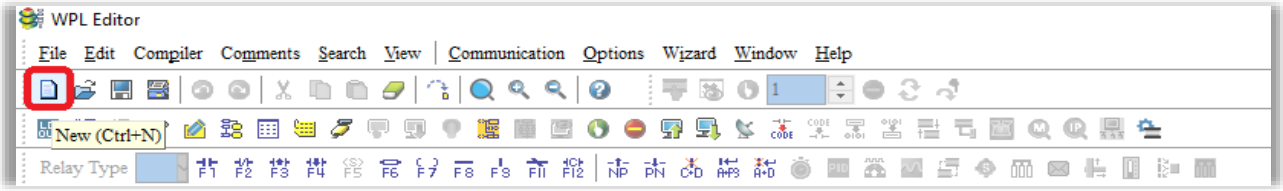

Figure 15-4

NOTE: You can also select **New (Ctr+N)** under function menu **File (F)** to open a new file.

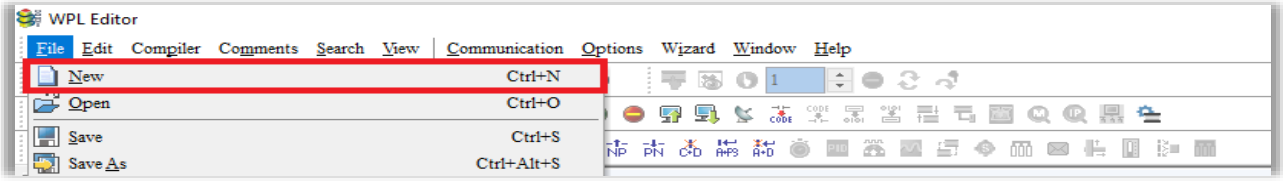

Figure 15-5

Step 4. **Select a PLC Model** window will then appear (see Figure 15-6). Set **Program Title**, **File Name**, **Model Type**, **VFD Type**, and **Communication Setting**.

Figure 15-6

Communication Setting: Set the communication method as required (see Figure 15-7).

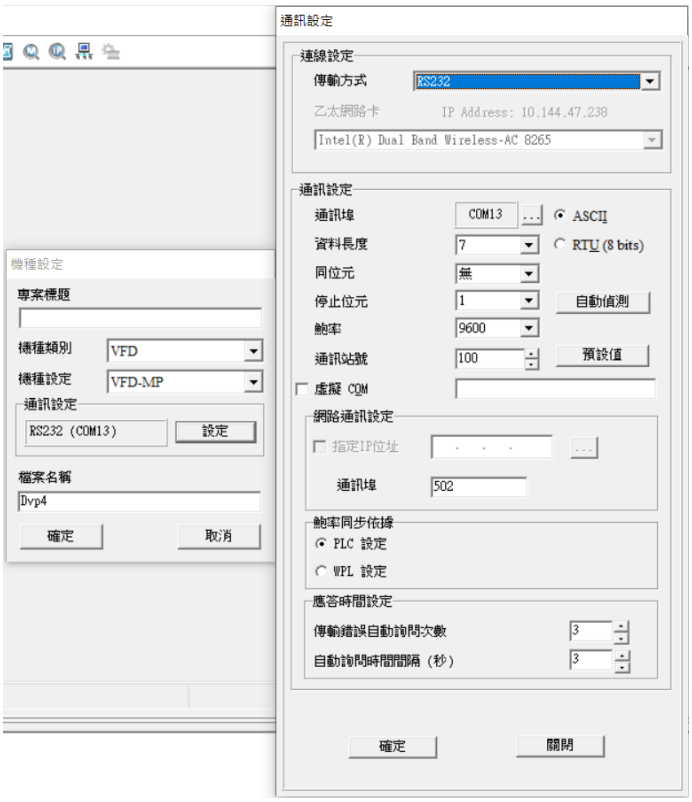

Figure 15-7

Step 5. After settings are finished, click **OK** to start editing the programs. Methods of editing programs: 1. **Instruction List Mode** and 2. **Ladder Diagram Mode**, as Figure 15-8 shows. Use the method as required.

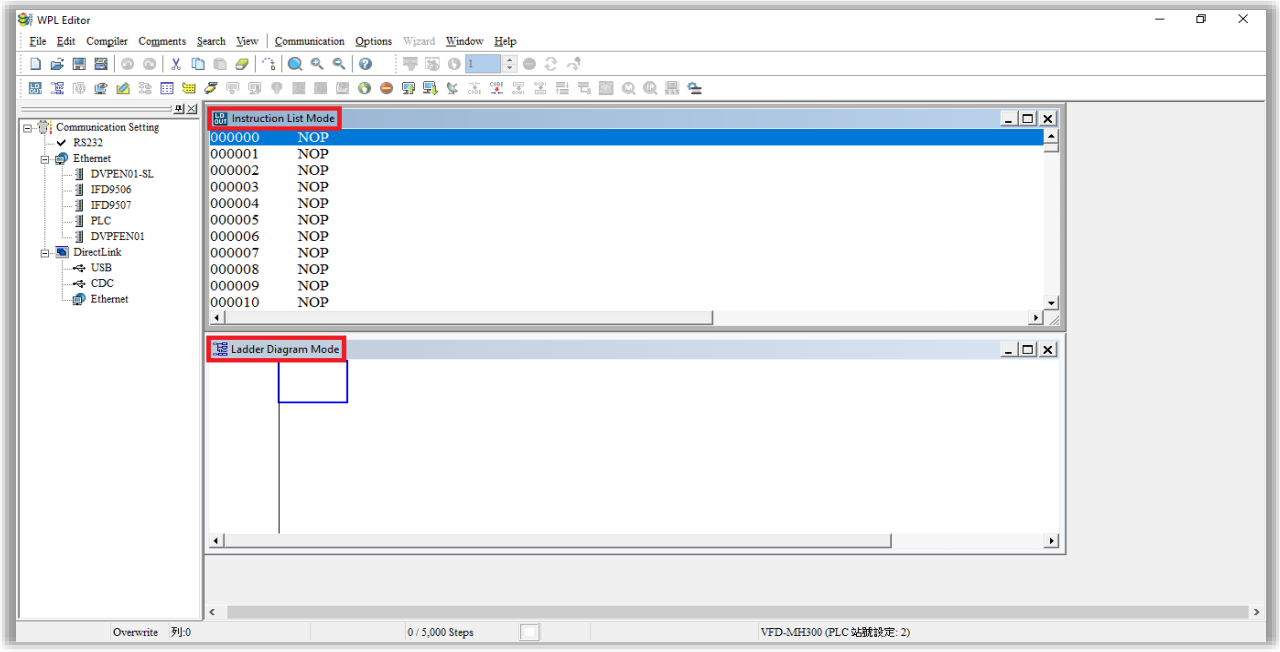

Figure 15-8

NOTE: In the ladder diagram mode, you can edit programs using buttons on the ladder diagram toolbar (see Figure 15-9).

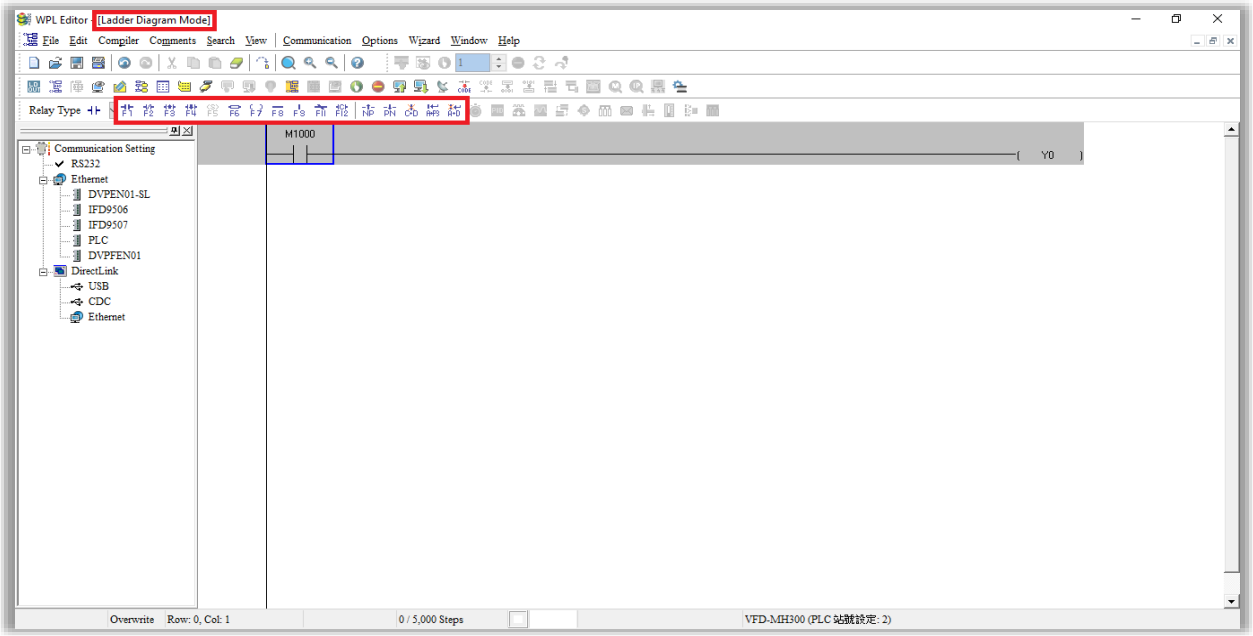

Figure 15-9

Example of Basic Operation

Input a ladder diagram as Figure shows below. The following steps show how to use mouse and keypad functions (F1 to F12) to edit programs.

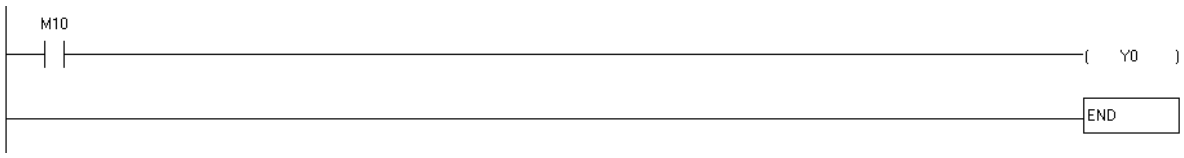

Figure 15-10

Step 1. Create a new file, and then the page below appears.

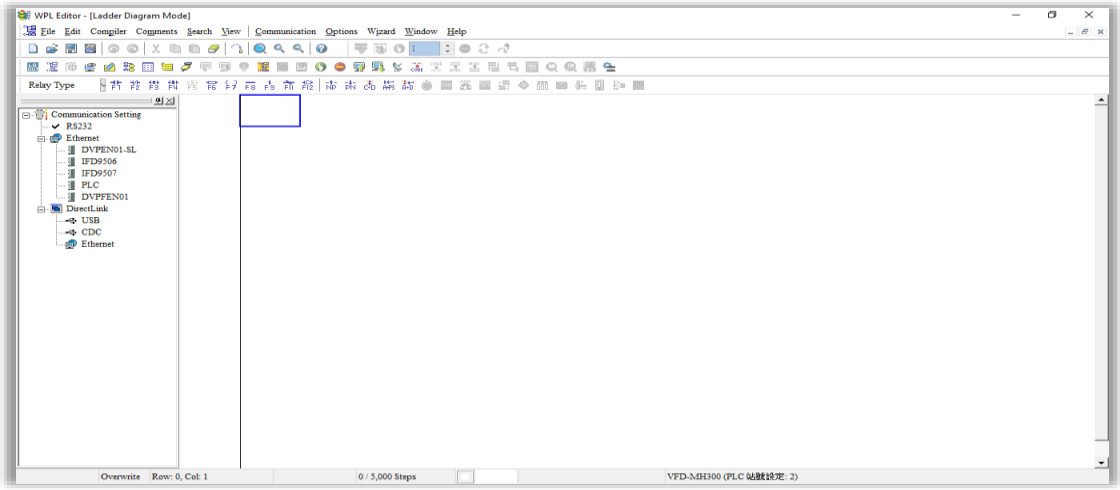

Figure 15-11

Step 2. Click **Normally Open Contact** button or press function key F1. **Input Device Instruction** window appears. Select **Device Name** (e.g. M), **Device Number** (e.g. 10), and type **Comment** (e.g. Auxiliary coil). Then, click **OK** to finish settings, as Figure 15-12, 15-13 shows.

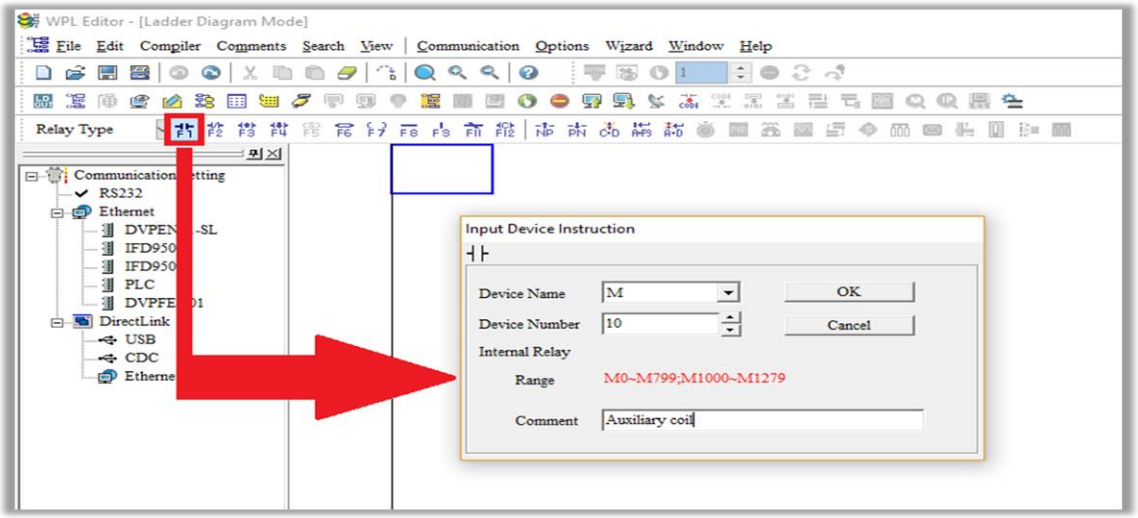

Figure 15-12

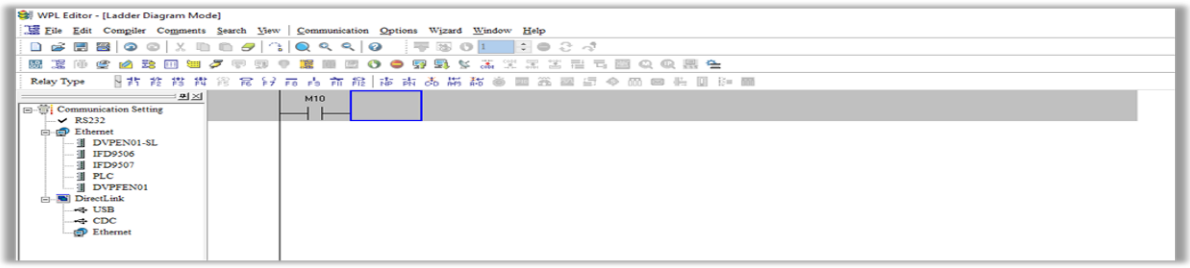

Figure 15-13

Step 3. Click **Output Coils** button or press function key F7. **Input Device Instruction** window appears. Select **Device Name** (e.g., M), **Device Number** (e.g., 0), and type **Comment** (e.g., Auxiliary coil). Then, click **OK** to finish settings, as Figure 15-14, 15-15 shows.

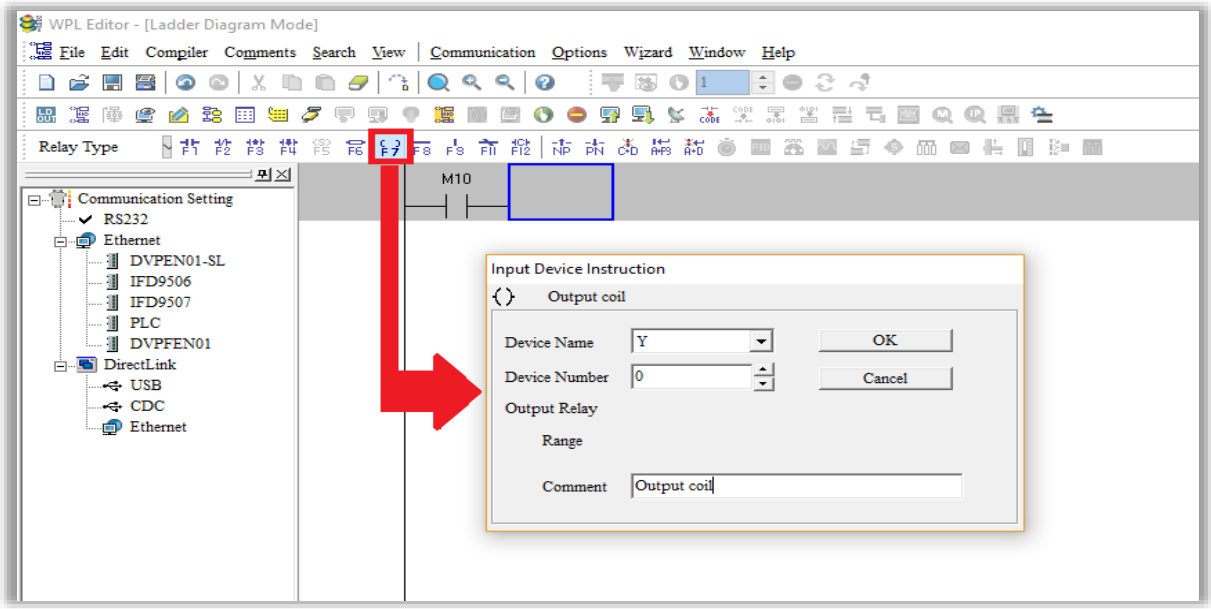

Figure 15-14

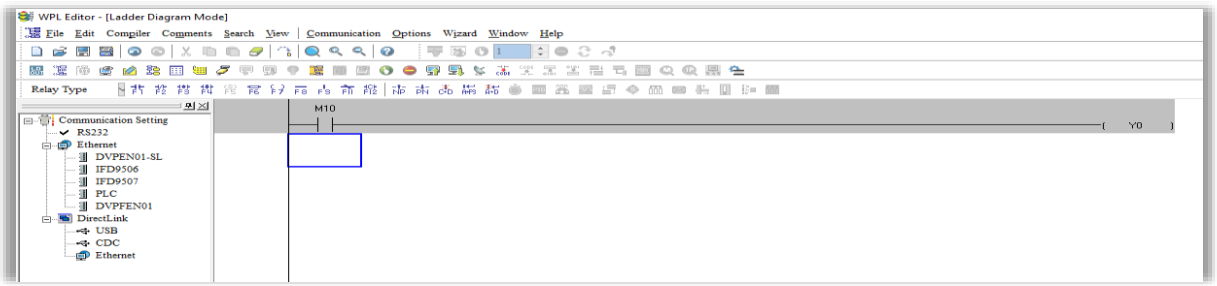

Figure 15-15

Step 4. Press ENTER key, and then an I**nput Instruction** window appears. Type “END” in the field, and then click **OK**, as Figure 15-16, 15-17 shows.

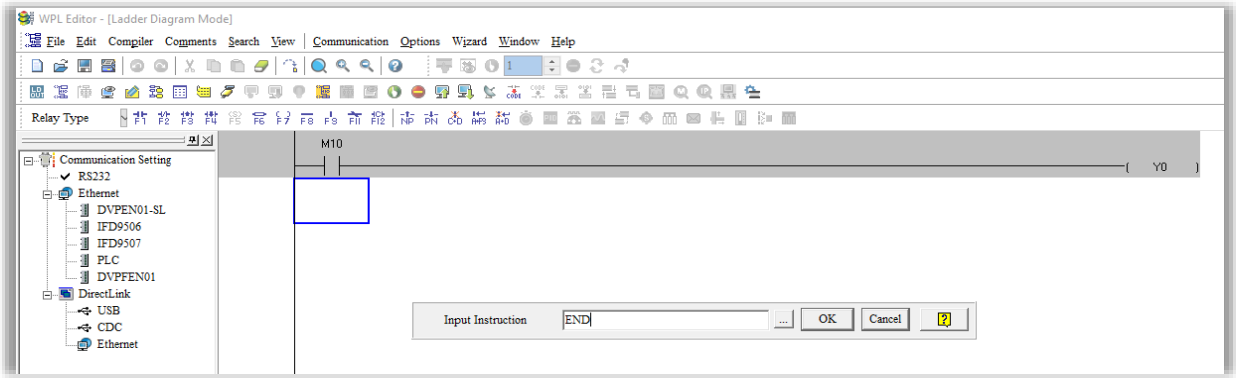

Figure 15-16

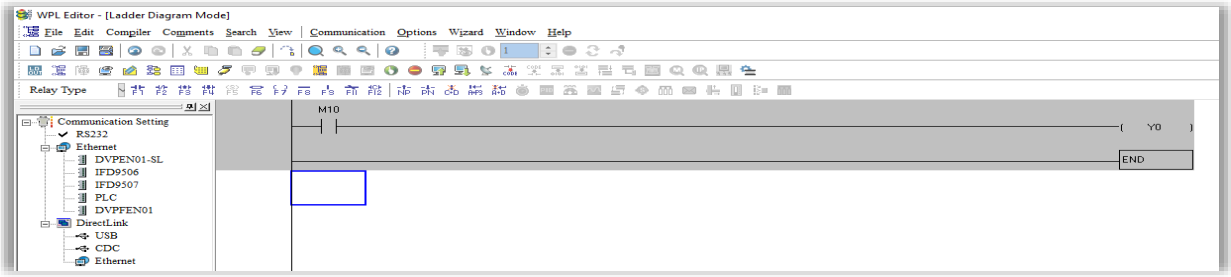

Figure 15-17

Step 5. Click **Ladder Diagram=>Command** button to convert the edited ladder diagram to the commands. After compiling is finished, the number of rungs (steps) appear on the left side of the busbar, as Figure 15-18 shows.

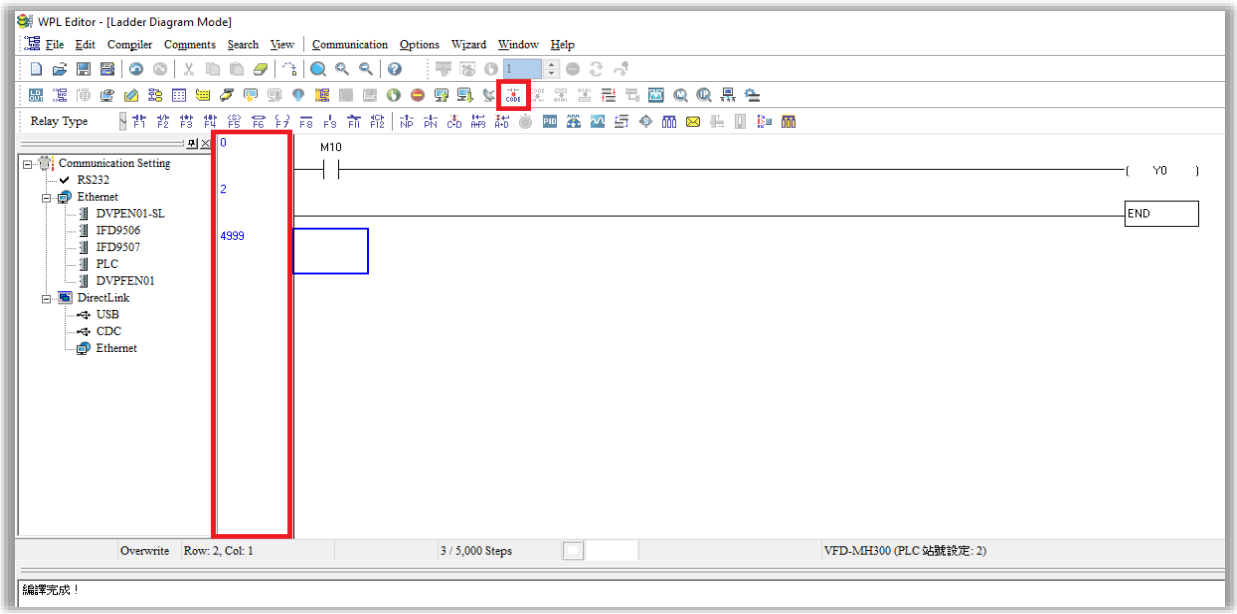

Figure 15-18

15-3-5 Program Downloading

After a program was input using WPLSoft, click **Compile** button. After compiling is finished, click **Download** button to download the programs. WPLSoft downloads the program to the online PLC in the communication format that you specified for the communication settings.

15-3-6 Program Monitoring

After downloading the program, make sure that the PLC is in Run mode. On the **Communications** menu, click **Online Mode** button, and then click **Start Ladder Diagram Control**, as the figure below shows. This allows you to monitor and operate the ladder diagram while online.

15-4 Basic Principles of PLC Ladder Diagrams

15-4-1 Schematic diagram of PLC ladder diagram program scanning

Output results are calculated on the basis of the ladder diagram configuration (internal devices will have real-time output before results are sent to an external output point)

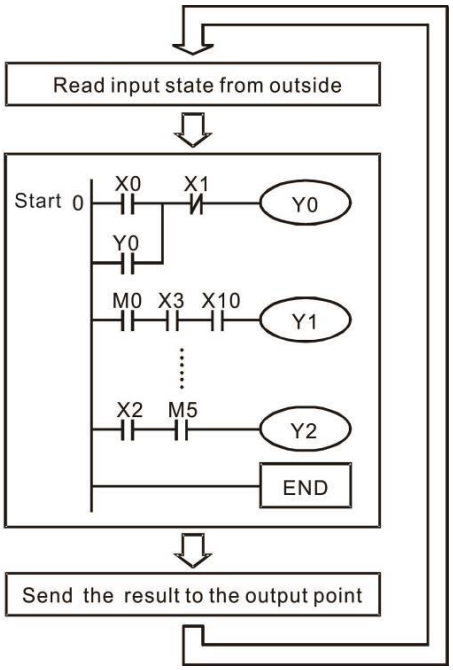

Implement the program repeatedly

15-4-2 Introduction to ladder diagrams

Ladder diagrams comprise a graphic language widely applied in automatic control, and employs common electrical control circuit symbols. After a ladder diagram editor has been used to create a ladder pattern, PLC program designed is completed. The use of a graphic format to control processes is very intuitive, and is readily accepted by personnel who are familiar with electrical control circuit technology. Many of the basic symbols and actions in a ladder diagram comprise commonly seen electrical devices in conventional automatic control power distribution panels, such as buttons, switches, relays, timers, and counters.

Internal PLC devices: The types and quantities of internal PLC devices vary in different brands of products. Although these internal devices use the same names as conventional electrical control circuit elements such as relays, coils, and contacts, a PLC does not actually contain these physical devices, and they instead correspond to basic elements in the PLC's internal memory (bits). For instance, if a bit is 1, this may indicate that a coil is electrified, and if that bit is 0, it will indicate that the coil is not electrified. An N.O. contact (Normal Open, or contact a) can be used to directly read the value of the corresponding bit, and an N.C. contact (Normal Close, or contact b) can be used to obtain the inverse of the bit's value. Multiple relays occupy multiple bits, and 8 bits comprise one byte; two bytes comprise one word, and two words comprise a double word. When multiple relays are processing at the same time (such as addition / subtraction or displacement, etc.), a byte, word, or double word can be used. Furthermore, a PLC contains two types of internal devices: a timer and a counter. It not only has a coil, but can count time and numerical values. Because of this, when it is necessary to process some numerical values, these values are usually in the form of bytes, words, or double words.

The various internal devices in a PLC all account for a certain quantity of storage units in the PLC's storage area. When these devices are used, the content of the corresponding storage area is read in the form of bits, bytes, or words.

Introduction to the basic internal devices in a PLC

Device type	Function
Input relay	An input relay constitutes the basic unit of storage in a PLC's internal memory corresponding to an external input point (which serves as a terminal connecting with an external input switch and receiving external input signals). It is driven by external input signals, to which it assigns values of 0 or 1. A program design method cannot change the input relay status, and therefore cannot rewrite the corresponding basic units of an input relay, and WPLSoft cannot be used to perform compulsory ON / OFF actions. A relay's contacts (contacts a and b) can be used an unlimited number of times. An input relay with no input signal must be left idle and cannot be used for some other purpose. ● Device indicated as: X0, X1, X7, X10, X11, etc. This device is expressed with the symbol "X", and a device's order is indicated with an octal number. Refer to Chapter 15-3-2 I/O device explanation for input point numbers.
Output relay	An output relay constitutes the basic unit of storage in a PLC's internal memory corresponding to an external output point (which connects with an external load). It may be driven by an input relay contact, a contact on another internal device, or its own contacts. It uses one NO contact to connect with external loads or other contacts, and, like input contacts, can use the contact an unlimited number of times. An output relay with no input signal will be idle, but may be used an internal relay if needed. ● Device indicated as: Y0, Y1,…Y7, Y10, Y11,…etc. This device is expressed with the symbol "Y" , and a device's order is indicated with an octal number. Refer to Chapter 15-3-2 I/O device explanation for output point numbers.
Internal auxiliary relay	Internal relays have no direct connection with the outside. These relays are auxiliary relays inside a PLC. Their function is the same as that of an auxiliary (central) relay in an electrical control circuit: Each auxiliary relay corresponding to a basic unit of internal storage; they can be driven by input relay contacts, output relay contacts, and the contacts of other internal devices. An internal auxiliary relay's contact can also be used an unlimited number of times. Internal auxiliary relays have no outputs to outside, and must output via an output point. ● Device indicated as: M0, M1 to M799, etc. This device is expressed as the symbol "M", and its order is expressed as a decimal number.
Counter	A counter is used to perform counting operations. A count setting value (such as the number of pulses to be counted) must be assigned when a counter is used. A counter contains a coil, contact, and a counting storage device. When the coil goes from OFF to ON, this indicates that the counter has an input pulse, and the count value plus one. There are 16 bits that can be employed by the user. ● Device indicated as: C0, C1 to C79, etc. This device is expressed as the symbol "C", and its order is expressed as a decimal number.

Timer	A timer is used to complete control of timing. The timer contains a coil, contact, and a time value register. When the coil is electrified, if the preset time is reached, the contact will be actuated (contact a will close, contact b will open), and the timer's fixed value will be given by the set value. Timer has a regulated clock cycle (timing units: 100 ms). As soon as power to the coil is cut off, the contact will no longer be actuated (contact a will open, contact b will close), and the original timing value will return to zero. ● Device indicated as: T0, T1 to T159, etc. The device is expressed as the symbol "T", and its order is expressed as a decimal number.
Data register	When a PLC is used to perform various types of sequence control and set time value and count value control, it most commonly performs data processing and numerical operations, and data registers are used exclusively for storage of data and various parameters. Each data register contains 16 bits of binary data, which means that it can store one word. Two data registers with adjacent numbers can be used to process double words. ● Device indicated as: D0, D1 to D399, etc. The device is expressed as the symbol "D", and its order is expressed as a decimal number.

Ladder diagram images and their explanation

Ladder diagram structures	Explanations	PLC instructions	Device for using
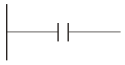	NO switch, contact a	LD	X, Y, M, T, C
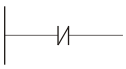	NC switch, contact b	LDI	X, Y, M, T, C
	Series NO	AND	X, Y, M, T, C
	Series NC	ANI	X, Y, M, T, C
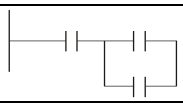	Parallel NO	OR	X, Y, M, T, C
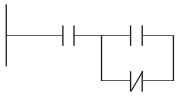	Parallel NC	ORI	X, Y, M, T, C
	Positive edge-triggered switch	LDP	X, Y, M, T, C
	Negative edge-triggered switch	LDF	X, Y, M, T, C
	Positive edge-triggered series	ANDP	X, Y, M, T, C

	Negative edge-triggered series	ANDF	X, Y, M, T, C
	Positive edge-triggered parallel	ORP	X, Y, M, T, C
	Negative edge-triggered parallel	ORF	X, Y, M, T, C
	Block series	ANB	N/A
	Block parallel	ORB	N/A
	Multiple outputs	MPS MRD MPP	N/A
	Coil driven output commands	OUT	Y, M
	Some basic commands, applications commands	Some are PLC basic instructions, some are PLC application instructions	Refer to the descriptions of each application
	Inverted logic	INV	N/A

15-4-3 Key points for editing PLC ladder diagram

The program editing method begins from the left busbar and proceeds to the right busbar (the right busbar is omitted when editing using WPLSoft). Continue to the next row after completing each row; there is a maximum of 11 contacts on each row. If this is not sufficient, a continuous line will be generated to indicate the continued connection and more devices can be added. A continuous series of numbers will be generated automatically and identical input points can be used repeatedly. See diagram below.

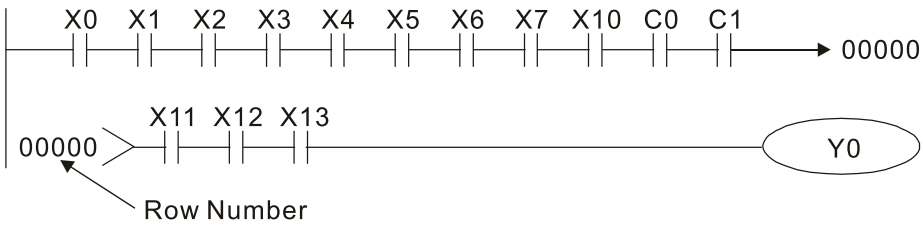

The ladder diagram programming method involves scanning from the upper left corner to the lower right corner. The coils and applications command-computing box are handled in the output, and the ladder diagram is placed on the farthest right. Take the figure below as an example, we can gradually analyze the procedural sequence of the ladder diagram. The number in the upper right corner gives the sequential order.

Instruction sequence explanation

1	LD	X0	
2	OR	M0	
3	AND	X1	
4	LD	X3	
	AND	M1	
	ORB		
5	LD	Y1	
	AND	X4	
6	LD	T0	
	AND	M3	
	ORB		
7	ANB		
8	OUT	Y1	
	TMR	T0	K10

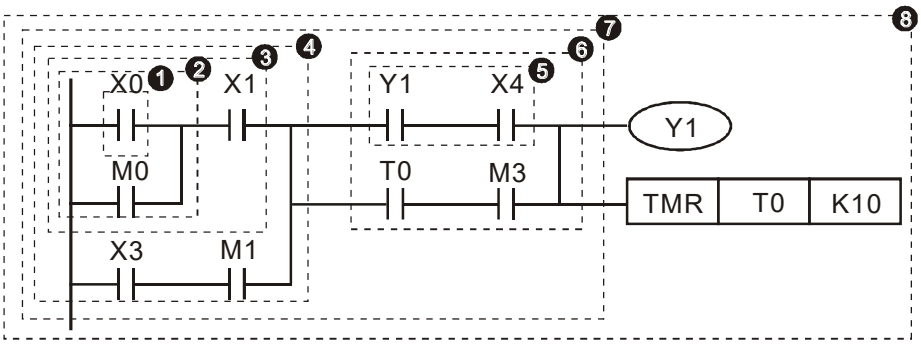

Explanations of basic structure of ladder diagrams

LD (LDI) command: a command that gives LD or LDI at the beginning of a block

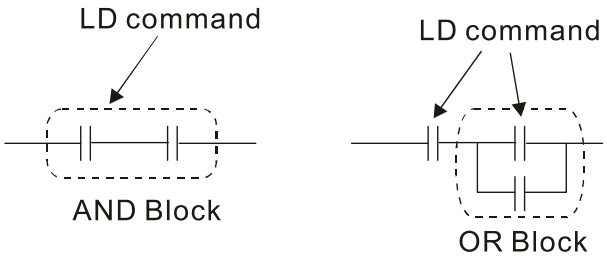

LDP and LDF have the same command structure, but there are differences in their action state. LDP, LDF only act at the rising or falling edge of a conducting contact. See diagram below.

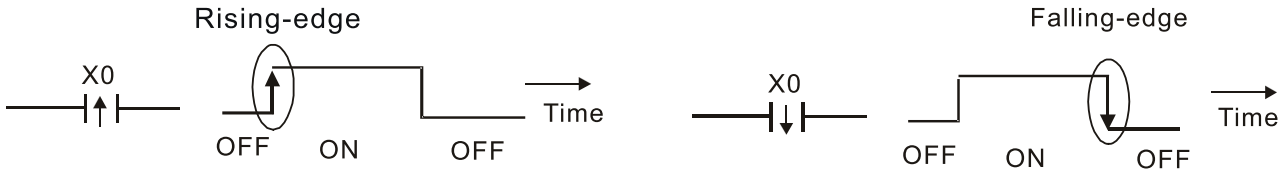

AND (ANI) command: a series configuration in which a single device is connected with one device or a block.

ANDP and ANDF have the same command structure, but their action occurs at the rising and falling edge.

OR (ORI) command: a single device is connected with one device or a block.

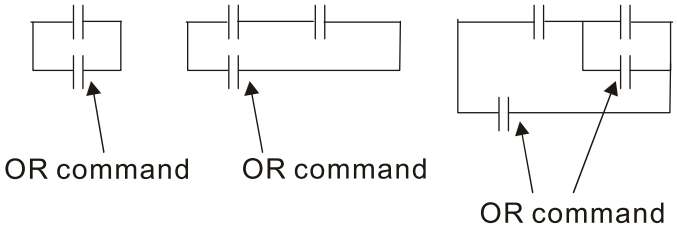

ORP and ORF have the same command structure, but their action occurs at the rising and falling edge.

ANB command: A configuration in which one block is in series with one device or block.

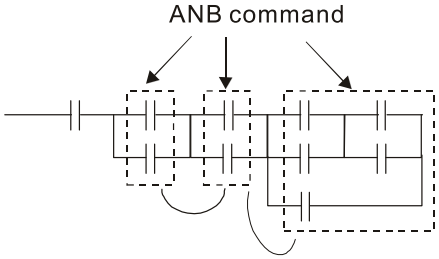

ORB command: A configuration in which one block is in parallel with one device or block.

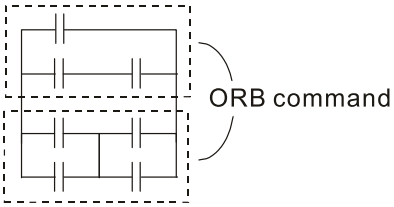

In the case of ANB and ORB operations, if a number of blocks are connected, they should be combined to form a block or network from the top down or from left to right.

MPS, MRD, MPP commands: Branching point memory for multiple outputs, enabling multiple, different outputs.

MPS command begins at a branching point, where the so-called branching point refers to the intersection of horizontal and vertical lines. We have to rely on the contact status along a single vertical line to determine whether the next contact can give a memory command. While each contact is basically able to give memory commands, in view of convenience and the PLC's capacity restrictions, this can be omitted from some places when converting a ladder diagram. The structure of the ladder diagram can be used to judge what kinds of contact memory commands are used.

MPS can be distinguished by use of the "┬" symbol; this command can be used consecutively for up to 8 times. MRD command is read from branching point memory; because logic states along any one vertical line must be the same, in order to continue analysis of other ladder diagrams, the original contact status must be read.

MRD can be distinguished by use of the "├" symbol. MPP command is read from the starting state of the uppermost branching point, and it is read from the stack (pop); because it is the final command along a vertical line, it indicates that the state of the vertical line can be concluded.

MPP can be distinguished by use of the "└" symbol. Although there should basically be no errors

when using the foregoing analytical approach, the compiling program may sometimes omit identical state output, as shown in the following figure:

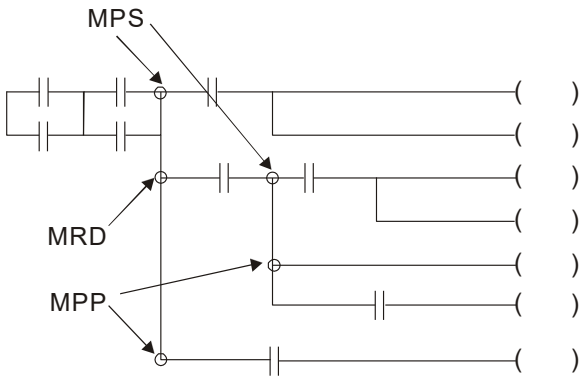

15-4-4 Commonly used basic program design examples

Start, stop, and protection

Some applications may require a brief close or brief break using the buttons to start and stop equipment. A protective circuit must therefore be designed to maintain continued operation in these situations; this protective circuit may employ one of the following methods:

Example 1: Priority stop protective circuit

When the start NO contact X1 = ON, and the stop NC contact X2＝OFF, Y1 = ON; if X2 = ON at this time, coil Y1 will no longer be electrified, and this is therefore referred to as priority stop.

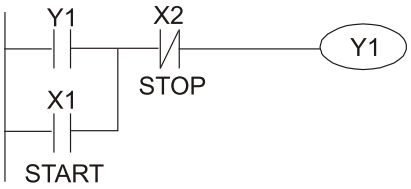

Example 2: Priority start protective circuit

When start NO contact X1 = ON, and the stop NC contact X2＝OFF, Y1 = ON, and coil Y1 will be electrified and protected. At this time, if X2 = ON, coil Y1 will still protect the contact and continue to be electrified, and this is therefore priority start.

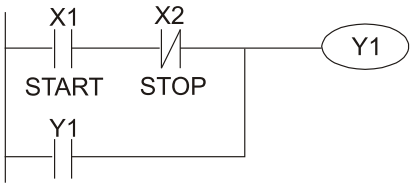

Example 3: Setting (SET) and reset (RST) command protective circuit

The following figure shows a protective circuit composed of RST and SET commands.

Priority stop occurs when the RST command is placed after the SET command. Because the PLC executes programs from the top down, at the end of the program, the state of Y1 will indicate whether coil Y1 is electrified. When X1 and X2 are both actuated, Y1 will lose power, and this is therefore priority stop.

Priority start occurs when the SET command is placed after the RST command. When X1 and X2 are both actuated, Y1 will be electrified, and this is therefore priority start.

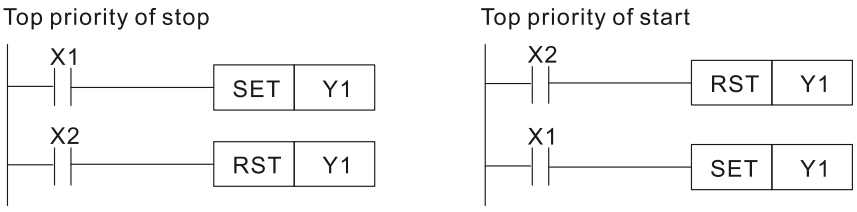

Commonly used control circuits

Example 4: Conditional control

X1, X3 are respectively start/ stop Y1, and X2 & X4 are respectively start / stop Y2; all have protective circuits. Because Y1's NO contact is in series with Y2's circuit, it becomes an AND condition for the actuation of Y2. The action of Y1 is therefore a condition for the action of Y2, and Y1 must be actuated before Y2 can be actuated.

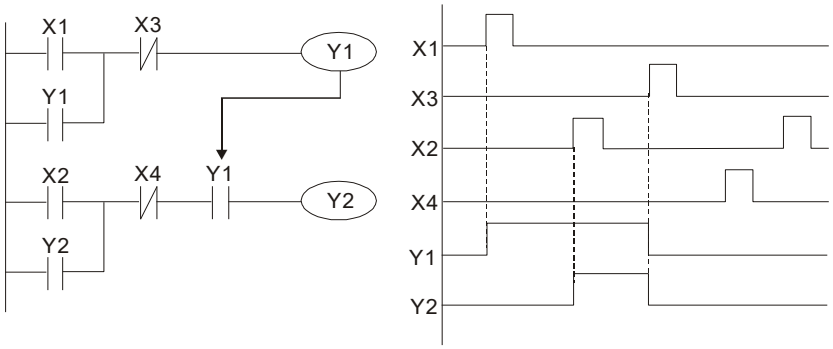

Example 5: Interlocking control

The figure below shows an interlocking control circuit. Depending on which of the start contacts X1, X2 is valid first, the corresponding output Y1 or Y2 will be actuated, and when one is actuated, the other will not be actuated. This implies that Y1 and Y2 cannot be actuated at the same time (interlocking effect). Even if both X1 and X2 are valid at the same time, because the ladder diagram program is scanned from the top down, it is impossible for Y1 and Y2 to be actuated at same time. This ladder diagram assigns priority only to Y1.

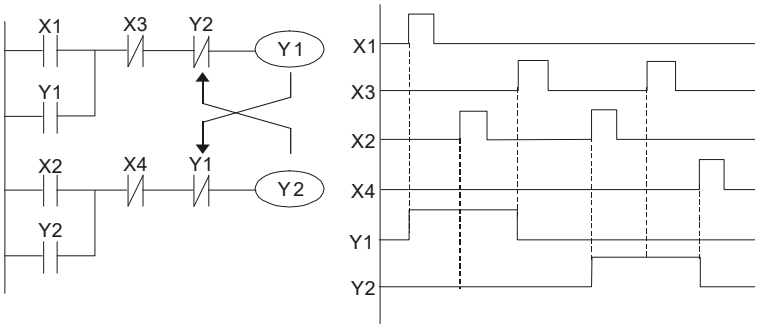

Example 6: Sequence control

If the NC contact of Y2 in the interlocking control configuration of example 5 is put in series with the Y1 circuit, so that it is an AND condition for actuation of Y1 (see figure below), not only is Y1 a condition for the actuation of Y2 in this circuit, the actuation of Y2 will also stop the actuation of Y1. This configuration confirms the actuation order of Y1 and Y2.

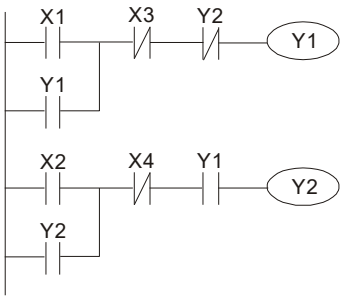

Example 7: Oscillating circuit

Oscillating circuit with a period of ΔT+ΔT

The figure below shows a very simple ladder diagram. When starting to scan the Y1 NC contact, because the Y1 coil has lost power, the Y1 NC contact will be closed. When the Y1 coil is then scanned, it will be electrified, and the output will be 1. When the Y1 NC contact is scanned in the scanning cycle, because Y1 coil is electrified, the Y1 NC contact will be opened, the Y1 coil will then lose power, and the output will be 0. Following repeated scanning, the output of Y1 coil will have an oscillating waveform with a period of ΔT (ON) +ΔT (OFF).

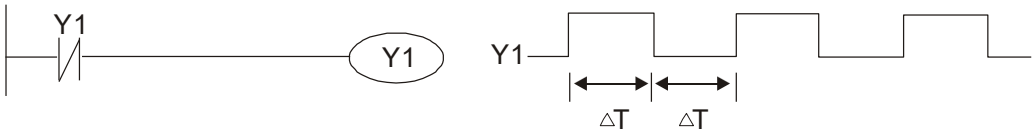

Oscillating circuit with a period of nT+ΔT

The program of the ladder diagram shown below uses timer T0 to control coil Y1's electrified time. After Y1 is electrified, it causes timer T0 to close during the next scanning cycle, which will cause the output from Y1 to have the oscillating waveform shown in the figure below. Here n is the timer's decimal setting value, and T is the clock cycle of the timer.

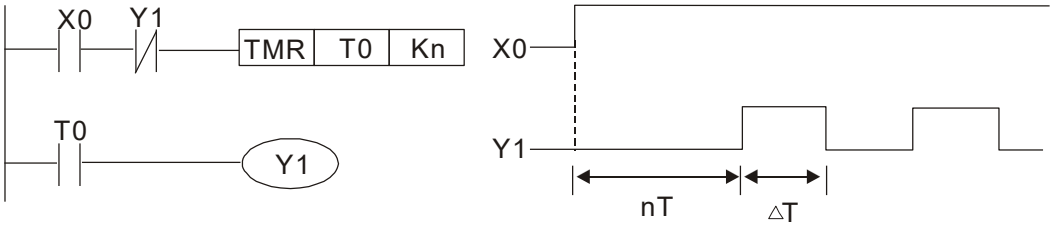

Example 8: Flashing circuit

The following figure shows an oscillating circuit of a type commonly used to cause an indicator light to flash or a buzzer to buzz. It uses two timers to control the On and Off time of Y1 coil. Here n1, n2 are the timing set values of T1 and T2, and T is the clock cycle of the timer.

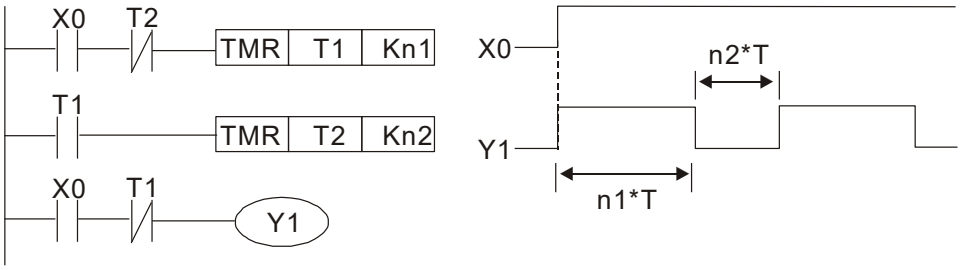

Example 9: Triggering circuit

In the figure below, a command consisting of the differential of the rising edge of X0 causes coil M0 to generate a single pulse for ΔT (length of one scanning cycle), and coil Y1 is electrified during this scanning cycle. Coil M0 loses power during the next scanning cycle, and NC contact M0 and NC contact Y1 are both closed. This causes coil Y1 to stay in an electrified state until there is another rising edge in input X0, which again causes the electrification of coil M0 and the start of another scanning cycle, while also causing coil Y1 to

lose power, etc. The sequence of these actions can be seen in the figure below. This type of circuit is commonly used to enable one input to perform two actions in alternation. It can be seen from the time sequence in the figure below that when input X0 is a square wave signal with a period of T, the output of coil Y1 will be a square wave signal with a period of 2T.

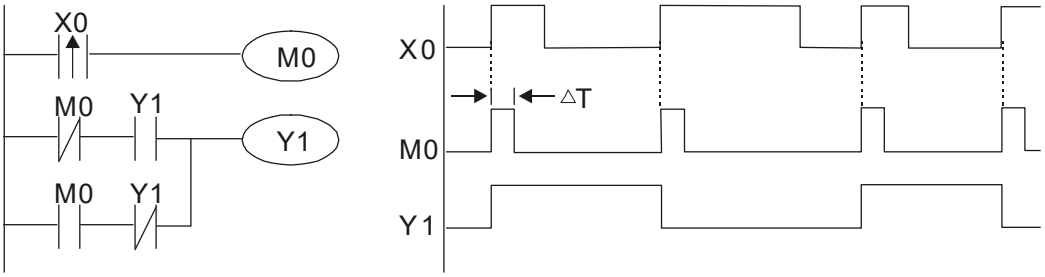

Example 10: Delay circuit

When input X0 is On, because the corresponding NC contact will be OFF, the timer T10 will be in no power status, and output coil Y1 will be electrified. T10 will receive power and begin timing only after input X0 is OFF, and output coil Y1 will be delayed for 100 sec. (K1000*0.1 sec. =100 sec.) before losing power; please refer to the sequence of actions in the figure below.

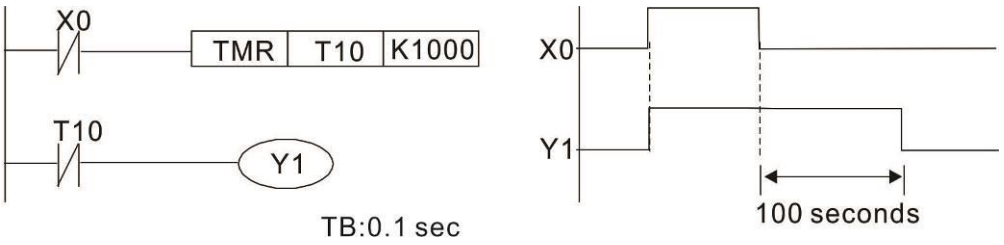

Example 11: The open / close delay circuit is composed of two timers; output Y4 will have a delay whether input X0 is ON or OFF.

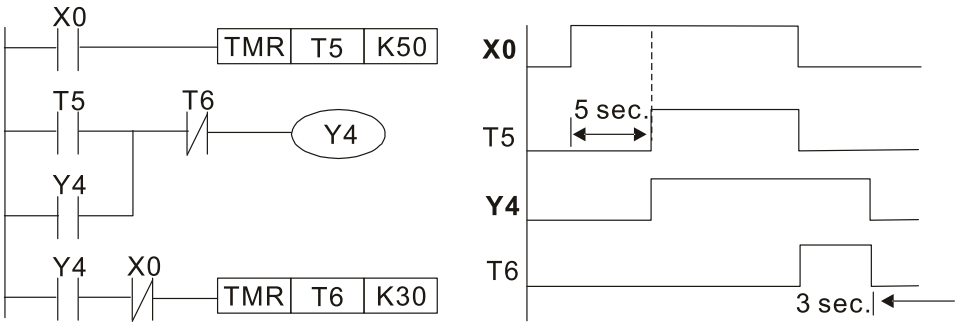

Example 12: Extended timing circuit

In the circuit in the figure on the left, the total delay time from the moment input X0 closes to the time output Y1 is electrified is (n1+n2)*T, where T is the clock cycle. Timers: T11, T12; clock cycle: T.

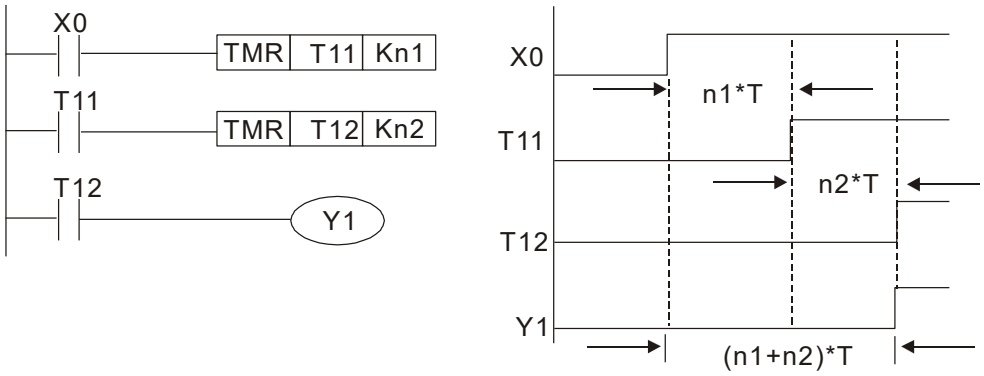

15-5 Functions of Various PLC Devices

Item	Specifications	Note
Algorithmic control method	Program stored internally, alternating back-and-forth scanning method	
Input / output control method	When it starts again after ending (after execution to the END command), the input / output has an immediate refresh command	
Algorithmic processing speed	Basic commands (several μs)	Application commands (1 to several tens of μs)
Programming language	Instruction list (IL) + ladder diagram (LD) + function block diagram (FBD)	
Program capacity	14000 steps	
Inputs / outputs contacts	Digital input (X): 4, digital output (Y): 3 Analog input (AI): 2, analog output (AO): 1	This number of contacts constitutes MP300 input / output contacts; other devices have different correspondences

Type	Device	Item		Range		Functions
Relay bit form	X	External input relay		X0–X17, 16 points, octal number	Total 32 points	Corresponds to external input points
	Y	External output relay		Y0–Y17, 16 points, octal number		Corresponds to external output points
	M	Auxiliary relay	General purpose	M0–M799, 800 points	Total 1160 points	Contacts can be used as ON / OFF switch in the program
			Special purpose	M1000–M1359, 360 points		
	T	Timer	100m Timer	T0–T159, 160 points	Total 160 points	Timer indicated by TMR instruction. If timing reaches its target, the T contact of the same number will be ON.
	C	Counter	16-bit counting up (general purpose)	C0–C79, 80 points	Total 80 points	Counter indicated by CNT (DCNT) instruction. If counting reaches its target, the C contact of the same number will be ON.
Register word data	T	Current value of timer		T0–T159, 160 points		When the timing reaches the target, the contact of the timer will be ON.
	C	Current value of counter		C0–C79, 16-bit counter, 80 points		When the counting reaches the target, the contact of the counter will be ON.
	D	Data register	Latching	D0–D399, 400 points	Total 1620 points	Memory area for data storage
			Non-latching	D400–D999, 600 points		
			Special purpose	D1000–D1619 · 620 points		
Constant	K	Decimal	Single byte	Setting Range: K-32,768–K32,767		
			Double-byte	Setting Range: K-2,147,483,648–K2,147,483,647		

	H	Hexadecimal	Single byte	Setting Range:H0000–HFFFF
			Double-byte	Setting Range: H00000000–HFFFFFFFF
Serial communication port (program write/read)				RS-485_1 (SG1) & 2 (SG2)
Analog input / output				Built-in two sets of analog inputs and one set of analog outputs
I/O function expansion module			Optional accessories	N/A
Communication expansion module			Optional accessories	DeviceNet, Profibus-DP, Modbus-TCP, EtherNet/IP, Blue Tooth

15-5-1 Introduction to The Command Window

Functions of inputs / outputs contacts

Input contact X functions: Input contact X is connected with an input device, and reads input signals entering the PLC. The number of times that contact a or b of input contact X is used in the program is not subject to restrictions. The ON / OFF state of input contact X will change as the input device switches ON and OFF; a peripheral device (WPLSoft) cannot be used to force contact X ON or OFF.

Functions of the output contact Y

The job of output contact Y is to send an ON / OFF signal to drive the load connected with output contact Y. Output contacts consist of two types: relays and transistors. While number of times that contact a or b of each output contact Y is used in the program is not subject to restrictions, it is recommended that the number of output coil Y be used only once in a program, otherwise the right to determine the output state when the PLC performs program scanning will be assigned to the program's final output Y circuit.

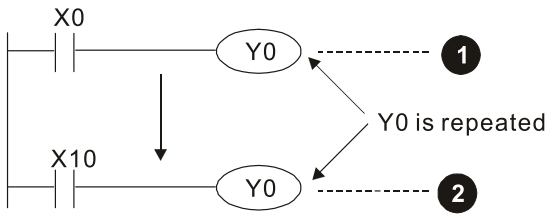

The output of Y0 will be decided by circuit ❷ ,
i.e. decided by ON/OFF of X10.

Numerical value, constant [K] / [H]

Constant	Single byte	K	Decimal	K-32,768 to K32,767
	Double-byte			K-2,147,483,648 to K2,147,483,647
	Single byte	H	Hexadecimal	H0000–HFFFF
	Double-byte			H00000000–HFFFFFFFF

The PLC can use five types of numerical values to implement calculations based on its control tasks; the following is an explanation of the missions and functions of different numerical values.

- Binary Number, BIN

  The PLC's numerical operations and memory employ binary numbers. Binary nibbles and relevant terms are explained as follows:

bit	Bit is the fundamental units of binary values, and have a state of either 1 or 0.
Nibble	Comprised of a series of 4 bits (such as b3–b0); can be used to express a one-nibble decimal number 0–9 or hexadecimal number: 0–F.
Byte	Comprised of a series of two nibbles (i.e., 8 bits, b7–b0); can express a hexadecimal number: 00–FF.
Word	Comprised of a series of two bytes (i.e., 16 bits, b15–b0); can express a hexadecimal number with four nibbles: 0000–FFFF.
Double word	Comprised of a series of two words (i.e., 32 bits, b31–b0); can express a hexadecimal number with eight nibbles: 00000000–FFFFFFFF

  Relation between bits, digits, nibbles, words, and double words in a binary system (see figure below):

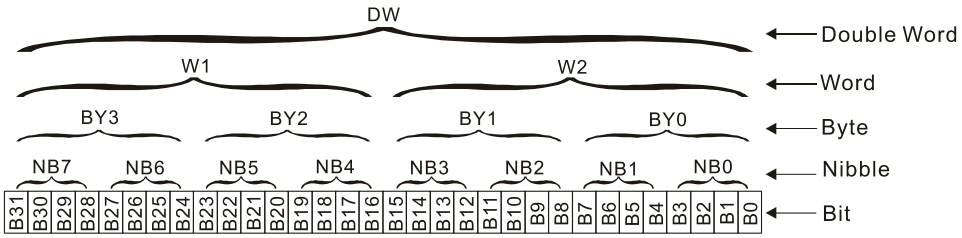

- Octal Number, OCT

  The external input and output terminals of a DVP-PLC are numbered using octal numbers

  Example: External input: X0–X7，X10–X17…(Device number table);

  External output: Y0–Y7，Y10–Y17…(Device number table)

- Decimal Number, DEC

  Decimal numbers are used for the following purposes in a PLC system:

  1. The setting values of timer T or counter C, such as TMR C0 K50. (K constant)
  2. The numbers of devices including M, T, C, or D, such as M10 or T30. (device number)
  3. Used as an operand in an application command, such as MOV K123 D0. (K constant)

- Binary Code Decimal, BCD

  Use one nibble or 4 bits to express the data in a decimal number; a series of 16 bits can therefore express a decimal number with 4 nibbles. Chiefly used to read the input value of a fingerwheel numerical switch input or output a numerical value to a seven-segment display drive.

- Hexadecimal Number, HEX

  Applications of hexadecimal numbers in a PLC system: Used as operands in application commands, such as MOV H1A2B D0. (H constant)

- Constant K

  Decimal numbers are usually prefixed with a "K" in a PLC system, such as K100. This indicates that it is a decimal number with a numerical value of 100.

  Exceptions: K can be combined with bit device X, Y, M, or S to produce data in the form of a

nibble, byte, word, or double word, such as in the case of K2Y10 or K4M100. Here K1 represents a 4-bit combination, and K2–K4 variously represent 8, 12, and 16-bit combinations.

- Constant H
  Hexadecimal numbers are usually prefixed with the letter "H" in a PLC system, such as in the case of H100, which indicates a hexadecimal number with a numerical value of 100.

Functions of auxiliary relays

Like an output relay Y, an auxiliary relay M has an output coil and contacts a and b, and the number of times they can be used in a program is unrestricted. Users can use an auxiliary relay M to configure the control circuit, but cannot use it to directly drive an external load. Auxiliary relays have the following two types of characteristics:

- Ordinary auxiliary relays: Ordinary auxiliary relays will all revert to the OFF state if a power outage occurs while the PLC is running, and will remain in the Off state if power is again turned down.
- Special purpose auxiliary relays: Each special purpose auxiliary relay has its own specific use. Do not use any undefined special purpose auxiliary relays.

Functions of timer

Timers take 100 ms as their timing units. When the timing method is an upper time limit, when the current timer value = set value, power will be sent to the output coil. Timer setting values consist of decimal K values, and the data register D can also serve as a setting value.

Actual timer setting time = timing units x set value

Features of counter

Item	16-bit counter
Type	General type
CT direction	Counting up
Setting	0–32,767
Designation of set value	Constant K or data register D
Change in current value	When the count reaches the set value, there is no longer a count
Output contact	When the count reaches the set value, the contact comes ON and stays ON
Reset	The current value reverts to 0 when an RST command is executed, and the contact reverts to OFF
Action of contacts	All are actuated after the end of scanning

Functions of counter

When a counter's counting pulse input signal goes OFF→ON, if the counter's current value is equal to the set value, the output coil will come ON. The setting value will be a decimal K values, and the data register D can also serve as a setting value.

16-bit counter C0–C79:

- 16-bit counter setting range: K0–K32,767. (when K0 and K1 are identical, the output contact will immediately be On during the first count.)
- The current counter value will be cleared from an ordinary counter when power is shut off to the PLC.
- If the MOV command or WPLSoft is used to transmit a value greater than the set value to the C0 current value register, when the next X1 goes from OFF→ON, the C0 counter contact will

change to ON, and the current value will change to the set value.

- A counter's setting value may be directly set using a constant K or indirectly set using the value in register D (not including special data registers D1000–D1199 or D2000–D2799).
- If the set value employs a constant K, it may only be a positive number; the set value may be either a positive or a negative number if the value in data register D is used. The current counter value will change from 32,767 to -32,768 as the count continues to accumulate.

Example:

LD	X0
RST	C0
LD	X1
CNT	C0, K5
LD	C0
OUT	Y0

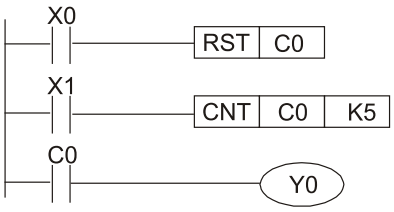

1. When X0 = ON and the RST command is executed, the current value of C0 will revert to 0, and the output contact will revert to OFF.
2. When X1 changes from OFF→ON, the current value of the counter will execute an increase (plus one).
3. When the count of counter C0 reaches the set value K5, the contact C0 will come ON, and the current value of C0 ＝ set value = K5. Afterwards, signal C0 triggered by X1 cannot be received, and the current value of C0 will remain K5.

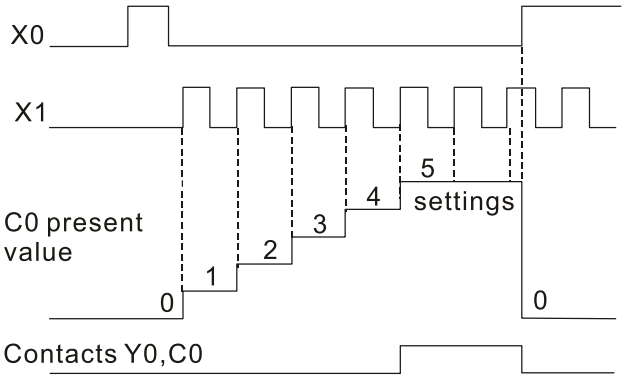

15-5-2 Introduction to special relay functions (special M)

R/W items: RO: read only function; RW: read and write function

Special M	Function	R/W *
M1000	Operates monitor NO contact (contact a). NO while RUN, contact a. This contact is ON while in the RUN state.	RO
M1001	Operates monitor NC contact (contact b). NC while RUN, contact b. This contact is OFF while in the RUN state.	RO
M1002	Initiates a forward (the instant RUN is ON) pulse. Initial pulse, contact a. Produces a forward pulse the moment RUN begins; its width = scan cycle	RO
M1003	Initiates a reverse (the instant RUN is Off) pulse. Initial pulse, contact a. Produces a reverse pulse the moment RUN ends; the pulse width = scan cycle	RO
M1004	Reserved	RO
M1005	Drive malfunction instructions	RO
M1006	Converter has no output (1 = no output, 0 = output)	RO
M1007	Drive direction FWD(0) / REV(1)	RO
M1011	10 ms clock pulse, 5ms ON / 5ms OFF	RO
M1012	100 ms clock pulse, 50ms ON / 50ms OFF	RO
M1013	1 sec. clock pulse, 0.5s ON / 0.5s OFF	RO
M1014	1 min. clock pulse, 30s ON / 30s OFF	RO

Special M	Function	R/W *
M1015	Frequency attained (when used together with M1025)	RO
M1016	Parameter read / write error	RO
M1017	Parameter write successful	RO
M1019	Instruction to the warning of AC motor drive	RO
M1020	Zero flag	RO
M1021	Borrow flag	RO
M1022	Carry flag	RO
M1023	Divisor is 0	RO
M1025	Target drive frequency = set frequency (ON) Target drive frequency =0 (OFF)	RW
M1026	Drive operating direction FWD(OFF) / REV(ON)	RW
M1027	Drive Reset	RW
M1040	Excitation (Servo ON)	RW
M1042	Quick stop	RW
M1044	Pause (Halt)	RW
M1052	Lock frequency (lock, frequency locked at the current operating frequency)	RW
M1056	Excitation ready (Servo ON Ready)	RO
M1058	In the process of Quick Stopping	RO
M1077	485 read / write completed	RO
M1078	485 read / write error	RO
M1079	485 Communications time out	RO
M1080	485 exception error	RO
M1081	485 check sum or data format is wrong	RO
M1090	OFF (Refer to Pr.00-29 for more information)	RO
M1091	HAND (Refer to Pr.00-29 for more information)	RO
M1092	AUTO (Refer to Pr.00-29 for more information)	RO
M1100	LOCAL (Refer to Pr.00-29 for more information)	RO
M1101	REMOTE (Refer to Pr.00-29 for more information)	RO
M1168	Switch SMOV, BCD and BIN mode	RW
M1260	PLC PID1 enable	RW
M1261	The initial value of integration presets when enable PLC PID1	RW
M1262	PLC PID1 The setting to assign the initial value of integration, 0: assign as the minimum; 1: assign as the maximum.	RW
M1263	PLC PID1 The value of integration is forced to be D1208.	RW
M1264	Assign the last value of integration when enable PLC PID1.	RW
M1265	PLC PID1 The setting to assign the initial value of integration, 0: according to M1262; 1: assign as D1208.	RW
M1270	PLC PID2 enable	RW
M1271	The initial value of integration presets when enable PLC PID2	RW
M1272	PLC PID2 The setting to assign the initial value of integration, 0: assign as the minimum; 1: assign as the maximum.	RW

Special M	Function	R/W *
M1273	PLC PID2 The value of integration is forced to be D1228.	RW
M1274	Assign the last value of integration when enable PLC PID2.	RW
M1275	PLC PID2 The setting to assign the initial value of integration, 0: according to M1272; 1: assign as D1228.	RW
M1280	PLC PID3 enable	RW
M1281	The initial value of integration presets when enable PLC PID3	RW
M1282	PLC PID3 The setting to assign the initial value of integration, 0: assign as the minimum; 1: assign as the maximum.	RW
M1283	PLC PID3 The value of integration is forced to be D1248.	RW
M1284	Assign the last value of integration when enable PLC PID3.	RW
M1285	PLC PID3 The setting to assign the initial value of integration, 0: According to M1282; 1: Preset as D1248	RW
M1290	PLC PID4 enable	RW
M1291	The initial value of integration presets when enable PLC PID4	RW
M1292	PLC PID4 The setting to assign the initial value of integration, 0: assign as the minimum; 1: assign as the maximum.	RW
M1293	PLC PID4 The value of integration is forced to be D1268.	RW
M1294	Assign the last value of integration when enable PLC PID4.	RW
M1295	PLC PID4 The setting to assign the initial value of integration, 0: according to M1292; 1: assign as D1268.	RW
M1300	PLC PID5 enable	RW
M1301	The initial value of integration presets when enable PLC PID5	RW
M1302	PLC PID5 The setting to assign the initial value of integration, 0: assign as the minimum; 1: assign as the maximum.	RW
M1303	PLC PID5 The value of integration is forced to be D1288.	RW
M1304	Assign the last value of integration when enable PLC PID5.	RW
M1305	PLC PID5 The setting to assign the initial value of integration, 0: according to M1302; 1: assign as D1288.	RW
M1310	PLC PID6 enable	RW
M1311	The initial value of integration presets when enable PLC PID6	RW
M1312	PLC PID6 The setting to assign the initial value of integration, 0: assign as the minimum; 1: assign as the maximum.	RW
M1313	PLC PID6 The value of integration is forced to be D1308.	RW

Special M	Function	R/W *
M1314	Assign the last value of integration when enable PLC PID6.	RW
M1315	PLC PID6 The setting to assign the initial value of integration, 0: according to M1312; 1: assign as D1308.	RW
M1320	PLC PID7 enable	RW
M1321	The initial value of integration presets when enable PLC PID7	RW
M1322	PLC PID7 The setting to assign the initial value of integration, 0: assign as the minimum; 1: assign as the maximum.	RW
M1323	PLC PID7 The value of integration is forced to be D1328.	RW
M1324	Assign the last value of integration when enable PLC PID7.	RW
M1325	PLC PID7 The setting to assign the initial value of integration, 0: According to M1322; 1: Preset as D1328.	RW
M1330	PLC PID8 enable	RW
M1331	The initial value of integration presets when enable PLC PID8	RW
M1332	PLC PID8 The setting to assign the initial value of integration, 0: assign as the minimum; 1: assign as the maximum.	RW
M1333	PLC PID8 The value of integration is forced to be D1348.	RW
M1334	Assign the last value of integration when enable PLC PID8.	RW
M1335	PLC PID8 The setting to assign the initial value of integration, 0: According to M1332; 1: Preset as D1348.	RW

15-5-3 Introduction to special register functions (special D)

Special D	Function	R/W *
D1010	Current scan time (units: 0.1 ms)	RO
D1011	Minimum scan time (units: 0.1 ms)	RO
D1012	Maximum scan time (units: 0.1 ms)	RO
D1018	Current integral value	RO
D1019	Compulsory setting of PID I integral	RW
D1020	Output frequency (0.000–600.00Hz)	RO
D1021	Output current (####.#A)	RO
D1023	Communication expansion card number 0: No expansion card 1: DeviceNet Slave (CMC-DN01) 2: Profibus-DP Slave (CMC-PD01) 4: Modbus-TCP Slave (CMC-MOD01) 5: EtherNet/IP Slave (CMC-EIP01) 13: Bluetooth	RO
D1027	PID calculation frequency command (frequency command after PID calculation)	RO
D1028	AVI value (0.00–100.00%)	RO
D1029	ACI value (0.0–100.00%)	RO
D1036	Servo error bit	RO

Special D	Function	R/W *
D1037	Drive output frequency	RO
D1038	DC bus voltage	RO
D1039	Output voltage	RO
D1040	Output voltage	RW
D1043	Can be user-defined (will be displayed on panel when Pr. 00-04 is set as 28; display method is C xxx)	RW
D1061	485 COM1 communications time out time (ms)	RW
D1062	Torque command (torque limit in speed mode)	RW
D1064	Week (display range 1–7)	RO
D1065	Month (display range 1–12)	RO
D1066	Day (display range 1–31)	RO
D1067	Hour (display range 0–23)	RO
D1068	Minute (display range 0–59)	RO
D1069	Second (display range 0–59)	RO
D1100	Target frequency	RO
D1101	Target frequency (must be operating)	RO
D1102	Reference frequency	RO
D1107	π(Pi) Low word	RO
D1108	π(Pi) High word	RO
D1109	Random number	RO
D1200	PID1 Mode	RW
D1201	PID1 Target selection: 0: Refer to D1202 1: AI1 2: AI2	RW
D1202	PID1 Target value (0.00%–100.00%)	RW
D1203	PID1 Feedback selection: 0: Refer to D1204 1: AI1 2: AI2	RW
D1204	PID1 Feedback value (0.00%–100.00%)	RW
D1205	P value of PID1 (two decimal places)	RW
D1206	I value of PID1 (two decimal places)	RW
D1207	D value of PID1 (two decimal places)	RW
D1208	Forced to assign a value to PID 1 integral value	RW
D1209	PID1 Max. limit	RW
D1215	PID1 calculation	RO
D1216	PID1 present I value	RW
D1220	PID2 Mode	RW
D1221	PID 2 Target selection: 0: Refer to D1222 1: AI1 2: AI2	RW
D1222	PID2 Target value (0.00%–100.00%)	RW
D1223	PID2 Feedback selection: 0: Refer to D1224 1: AI1 2: AI2	RW

Special D	Function	R/W *
D1224	PID2 Feedback value (0.00%–100.00%)	RW
D1225	P value of PID2 (two decimal places)	RW
D1226	I value of PID2 (two decimal places)	RW
D1227	D value of PID2 (two decimal places)	RW
D1228	PID2 Max. limit	RW
D1229	PID2 Max. limit	RW
D1235	PID2 calculation	RO
D1236	PID2 present I value	RW
D1240	PID3 Mode	RW
D1241	PID3 target selection (0: refer to D1242; 1: AI1; 2: AI2)	RW
D1242	PID3 Target value (0.00%–100.00%)	RW
D1243	PID3 feedback selection (0: refer to D1244; 1: AI1; 2: AI2)	RW
D1244	PID3 Feedback value (0.00%–100.00%)	RW
D1245	P value of PID3 (two decimal places)	RW
D1246	I value of PID3 (two decimal places)	RW
D1247	D value of PID3 (two decimal places)	RW
D1248	Forced to assign a value to PID3 integral value	RW
D1249	PID3 Max. limit	RW
D1255	PID3 calculation	RO
D1256	PID3 present I value	RW
D1260	PID4 Mode	RW
D1261	PID4 target selection (0: refer to D1262; 1: AI1; 2: AI2)	RW
D1262	PID4 Target value (0.00%–100.00%)	RW
D1263	PID4 feedback selection (0: refer to D1264; 1: AI1; 2: AI2)	RW
D1264	PID4 Feedback value (0.00%–100.00%)	RW
D1265	P value of PID4 (two decimal places)	RW
D1266	I value of PID4 (two decimal places)	RW
D1267	D value of PID4 (two decimal places)	RW
D1268	Forced to assign a value to PID4 integral value	RW
D1269	PID4 Max. limit	RW
D1275	PID4 calculation	RO
D1276	PID4 present I value	RW
D1280	PID5 Mode	RW
D1281	PID5 target selection (0: refer to D1282; 1: AI1; 2: AI2)	RW
D1282	PID5 Target value (0.00%–100.00%)	RW
D1283	PID5 feedback selection (0: refer to D1284; 1: AI1; 2: AI2)	RW
D1284	PID5 Feedback value (0.00%–100.00%)	RW
D1285	P value of PID5 (two decimal places)	RW
D1286	I value of PID5 (two decimal places)	RW
D1287	D value of PID5 (two decimal places)	RW
D1288	Forced to assign a value to PID5 integral value	RW
D1289	PID5 Max. limit	RW
D1295	PID5 calculation	RO
D1296	PID5 present I value	RW
D1300	PID6 Mode	RW
D1301	PID6 target selection (0: refer to D1302; 1: AI1; 2: AI2)	RW
D1302	PID6 Target value (0.00%–100.00%)	RW

Special D	Function	R/W *
D1303	PID6 feedback selection (0: refer to D1304; 1: AI1; 2: AI2)	RW
D1304	PID6 Feedback value (0.00%–100.00%)	RW
D1305	P value of PID6 (two decimal places)	RW
D1306	I value of PID6 (two decimal places)	RW
D1307	D value of PID6 (two decimal places)	RW
D1308	Forced to assign a value to PID6 integral value	RW
D1309	PID6 Max. limit	RW
D1315	PID6 calculation	RO
D1316	PID6 present I value	RW
D1320	PID7 Mode	RW
D1321	PID7 target selection (0: refer to D1322; 1: AI1; 2: AI2)	RW
D1322	PID7 Target value (0.00%–100.00%)	RW
D1323	PID7 feedback selection (0: refer to D1324; 1: AI1; 2: AI2)	RW
D1324	PID7 Feedback value (0.00%–100.00%)	RW
D1325	P value of PID7 (two decimal places)	RW
D1326	I value of PID7 (two decimal places)	RW
D1327	D value of PID7 (two decimal places)	RW
D1328	Forced to assign a value to PID7 integral value	RW
D1329	PID7 Max. limit	RW
D1335	PID7 calculation	RO
D1336	PID7 present I value	RW
D1340	PID8 Mode	RW
D1341	PID8 target selection (0: refer to D1342; 1: AI1; 2: AI2)	RW
D1342	PID8 Target value (0.00%–100.00%)	RW
D1343	PID8 feedback selection (0: refer to D1344; 1: AI1; 2: AI2)	RW
D1344	PID8 Feedback value (0.00%–100.00%)	RW
D1345	P value of PID8 (two decimal places)	RW
D1346	I value of PID8 (two decimal places)	RW
D1347	D value of PID8 (two decimal places)	RW
D1348	Forced to assign a value to PID8 integral value	RW
D1349	PID8 Max. limit	RW
D1355	PID8 calculation	RO
D1356	PID8 present I value	RW

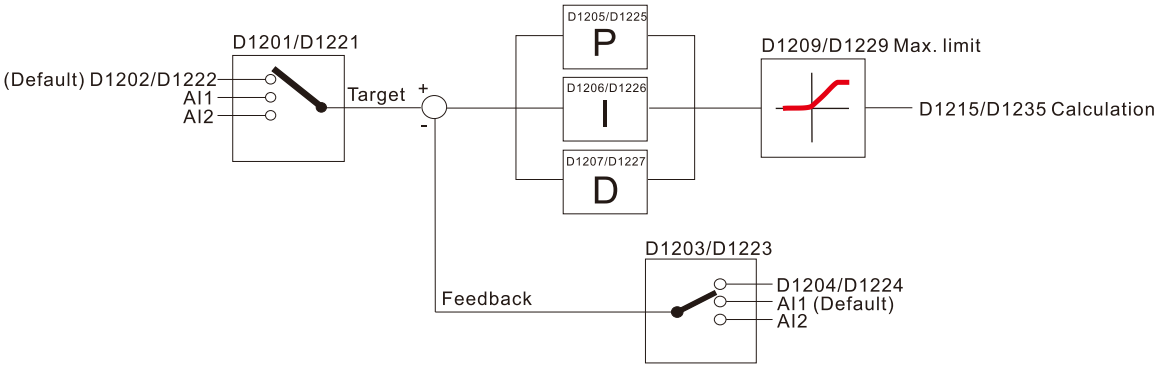

15-5-4 PLC Communication address

Device	Range	Type	Address (Hex)
X	00–37 (Octal)	bit	0400–041F
Y	00–37 (Octal)	bit	0500–051F
T	00–159	bit / word	0600–069F
M	000–799	bit	0800–0B1F
M	1000–1359	bit	0BE8–0C7F
C	0–79	bit / word	0E00–0E47
D	00–1000	word	1000–13E7
D	1000–1619	word	13E8–1653

Command code that can be used

Function Code	Function	Function target
01	Read coil status	Y, M, T, C
02	Read input status	X, Y, M, T, C
03	Read single unit of data	T, C, D
05	Compulsory single coil status change	Y, M, T, C
06	Write single unit of data	T, C, D
0F	Compulsory multiple coils status change	Y, M, T, C
10	Write multiple units of data	T, C, D

NOTE:

1: When PLC function enables, MP300 can correspond to parameters of PLC and the drive by the PLC communication addresses mentioned above.

2: The default station address of drive is 1, and the default station address of PLC is 100.

15-6 Introduction to the Functions of Instructions

15-6-1 Overview of basic instructions

General instructions

Instruction code	Function	OPERAND	Execution speed (μs)
LD	Load contact a	X, Y, M, T, C	0.8
LDI	Load contact b	X, Y, M, T, C	0.8
AND	Connect contact a in serial	X, Y, M, T, C	0.8
ANI	Connect contact b in serial	X, Y, M, T, C	0.8
OR	Connect contact a in parallel	X, Y, M, T, C	0.8
ORI	Connect contact b in parallel	X, Y, M, T, C	0.8
ANB	Series circuit block	N/A	0.3
ORB	Parallel circuit block	N/A	0.3
MPS	Save to stack	N/A	0.3
MRD	Stack read (pointer does not change)	N/A	0.3
MPP	Read stack	N/A	0.3

Output instructions

Instruction code	Function	OPERAND	Execution speed (μs)
OUT	Drive coil	Y, M	1
SET	Action continues (ON)	Y, M	1
RST	Clear contact or register	Y, M, T, C, D	1.2

Timer, counter

Instruction code	Function	OPERAND	Execution speed (μs)
TMR	16-bit timer	T-K or T-D	1.1
CNT	16-bit counter	C-K or C-D (16 bit)	0.5

Main control instructions

Instruction code	Function	OPERAND	Execution speed (μs)
MC	Common series contact connection	N0–N7	0.4
MCR	Common series contact release	N0–N7	0.4

Rising edge / falling edge contact detection instructions

Instruction code	Function	OPERAND	Execution speed (μs)
LDP	Rising edge detection	X, Y, M, T, C	1.1
LDF	Falling edge detection	X, Y, M, T, C	1.1
ANDP	Detect serial connection at rising edge	X, Y, M, T, C	1.1

Instruction code	Function	OPERAND	Execution speed (μs)
ANDF	Detect serial connection at falling edge	X, Y, M, T, C	1.1
ORP	Detect parallel connection at rising edge	X, Y, M, T, C	1.1
ORF	Detect parallel connection at falling edge	X, Y, M, T, C	1.1

Upper / lower differential output instructions

Instruction code	Function	OPERAND	Execution speed (μs)
PLS	Upper differential output	Y, M	1.2
PLF	Lower differential output	Y, M	1.2

End instruction

Instruction code	Function	OPERAND	Execution speed (μs)
END	End the program	N/A	0.2

Other instructions

Instruction code	Function	OPERAND	Execution speed (μs)
NOP	No operation	N/A	0.2
INV	Inverse of operation results	N/A	0.2
P	Pointer	P	0.3

15-6-2 Instructions of basic instructions

Instruction	Function					
LD	Load contact A					
Operand	X0–X17	Y0–Y17	M0–M799	T0–159	C0–C79	D0–D399
	✓	✓	✓	✓	✓	-
Description	LD instruction is used on the contact A that has its start from the left BUS bar or contact A that is the start of a contact circuit. The functions are to save the present contents and store the acquired contact status into the accumulative register.					

Example	Ladder diagram:	Instruction code		Operation
	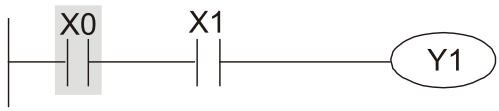	**LD**	**X0**	**Load X0 (the contact A)**
		AND	X1	Connect X1 (the contact A) in serial
		OUT	Y1	Drive Coil Y1

Instruction	Function					
LDI	Load contact B					
Operand	X0–X17	Y0–Y17	M0–M799	T0–159	C0–C79	D0–D399
	✓	✓	✓	✓	✓	-
Description	LDI instruction is used on the contact B that has its start from the left BUS bar or contact A that is the start of a contact circuit. The functions are to save the present contents and store the acquired contact status into the accumulative register.					

Example	Ladder diagram:	Instruction code		Operation
	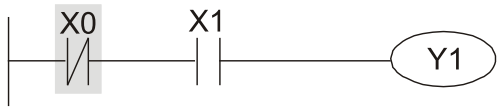	**LDI**	**X0**	**Load X0 (the contact B)**
		AND	X1	Connect X1 (the contact A) in serial
		OUT	Y1	Drive Coil Y1

Instruction	Functions					
AND	Connect contact A in serial					
Operand	X0–X17	Y0–Y17	M0–M799	T0–159	C0–C79	D0–D399
	✓	✓	✓	✓	✓	-
Description	AND instruction is used in the serial connection of contact A. The functions are to read out the contacts' status of present serial connection and perform "AND" operation with the logical operation result obtained. The final result will be stored in the accumulative register.					

Example

Ladder diagram:

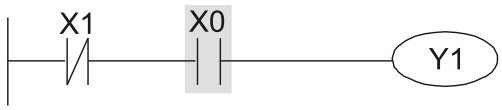

Instruction code		Operation
LDI	X1	Load X1 (the contact B)
AND	**X0**	**Connect X0 (the contact A) in serial**
OUT	Y1	Drive Coil Y1

Instruction	Function					
ANI	Connect contact B in serial					
Operand	X0–X17	Y0–Y17	M0–M799	T0–159	C0–C79	D0–D399
	✓	✓	✓	✓	✓	-
Description	ANI instruction is used in the serial connection of contact B. The functions are to read out the contacts' status of present serial connection and perform "AND" operation with the logical operation result obtained. The final result will be stored in the accumulative register.					

Example

Ladder diagram:

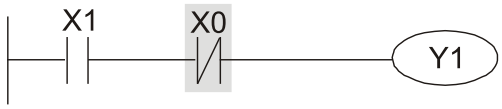

Instruction code		Operation
LD	X1	Load X1 (the contact A)
ANI	**X0**	**Connect X0 (the contact B) in serial**
OUT	Y1	Drive Coil Y1

Instruction	Functions					
OR	Connect contact A in parallel					
Operand	X0–X17	Y0–Y17	M0–M799	T0–159	C0–C79	D0–D399
	✓	✓	✓	✓	✓	-
Description	OR instruction is used in the parallel connection of contact A. The functions are to read out the contacts' status of present serial connection and perform "OR" operation with the logical operation result obtained. The final result will be stored in the accumulative register.					

Example

Ladder diagram:

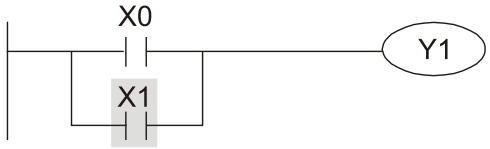

Instruction code		Operation
LD	X0	Load X0 (the contact A)
OR	**X1**	**Connect X1 (the contact A) in serial**
OUT	Y1	Drive Coil Y1

Instruction	Function					
ORI	Connect contact B in parallel					
Operand	X0–X17	Y0–Y17	M0–M799	T0–159	C0–C79	D0–D399
	✓	✓	✓	✓	✓	-
Description	ORI instruction is used in the parallel connection of contact B. The functions are to read out the contacts' status of present serial connection and perform "OR" operation with the logical operation result obtained. The final result will be stored in the accumulative register.					

Example

Ladder diagram:

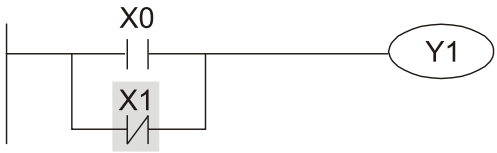

Instruction code		Operation
LD	X0	Load X0 (the contact A)
ORI	**X1**	**Connect X1 (the contact B) in serial**
OUT	Y1	Drive Coil Y1

Instruction	Function			
ANB	Series circuit block			
Operand	N/A			
Description	To perform “AND” operation of the previous saved logical result and the present content in the accumulative register.			
Example	Ladder diagram: 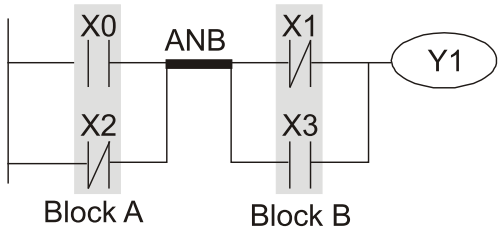	Instruction code		Operation
		LD	X0	Load X0 (the contact A)
		ORI	X2	Connect X2 (the contact B) in parallel
		LDI	X1	Load X1 (the contact B)
		OR	X3	Connect X3 (the contact A) in parallel
		ANB		**Series circuit block**
		OUT	Y1	Drive Coil Y1

Instruction	Function			
ORB	Parallel circuit block			
Operand	N/A			
Description	To perform “OR” operation of the previous saved logical result and the present content in the accumulative register.			
Example	Ladder diagram: 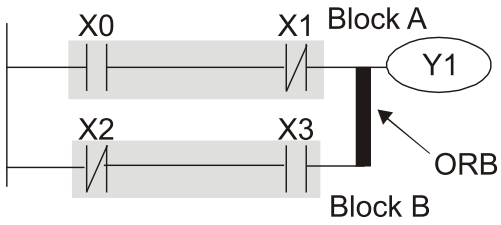	Instruction code		Operation
		LD	X0	Load X0 (the contact A)
		ANI	X1	Connect X1 (the contact B) in parallel
		LDI	X2	Load X2 (the contact B)
		AND	X3	Connect X3 (the contact A) in parallel
		ORB		**Parallel circuit block**
		OUT	Y1	Drive Coil Y1

Instruction	Function
MPS	Save to stack
Operand	N/A
Description	To save the content in the accumulative register into the stack. (the stack pointer plus 1)

Instruction	Function
MRD	POP operation to stack (the stack pointer stays intact)
Operand	N/A
Description	To read the stack and store it into the accumulative register. POP operation to stack (the stack pointer stays intact)

Instruction	Function
MPP	Read stack
Operand	N/A
Description	To retrieve the previous saved logical result and store it into the accumulative register. (the stack pointer minus 1)

Example

Ladder diagram:

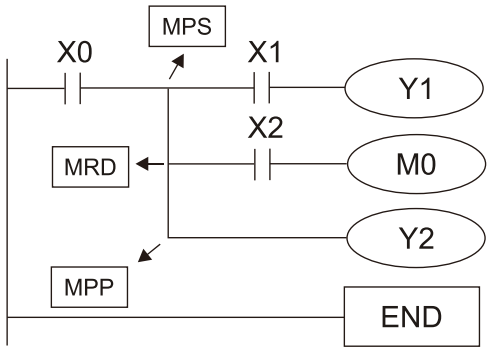

Instruction code		Operation
LD	X0	Load X0 (the contact A)
MPS		**Save to stack**
AND	X1	Connect X1 (the contact A) in serial
OUT	Y1	Drive Coil Y1
MRD		**POP operation to stack (the stack pointer stays intact)**
AND	X2	Connect X2 (the contact A) in serial
OUT	M0	Drive Coil M0
MPP		**Read stack**
OUT	Y2	Drive Coil Y2
END		End the program

Instruction	Function					
OUT	Drive coil					
Operand	X0–X17	Y0–Y17	M0–M799	T0–159	C0–C79	D0–D399
	-	✓	✓	-	-	-

Description

To output the logical operation result before OUT instruction into a designated device.

Action of the Coil contact:

Operation result	OUT instruction		
	Coil	Contact	
		Contact A (Normally Open)	Contact B (Normally Close)
FALSE	OFF	Not conducting	Conducting
TRUE	ON	Conducting	Not conducting

Example

Ladder diagram:

Instruction code		Operation
LDI	X0	Load X0 (the contact B)
AND	X1	Connect X1 (the contact A) in parallel
OUT	**Y1**	**Drive Coil Y1**

Instruction	Function					
SET	Action continues (ON)					
Operand	X0–X17	Y0–Y17	M0–M799	T0–159	C0–C79	D0–D399
	-	✓	✓	-	-	-

Description

When the SET instruction is driven, its designated device will be “ON” and keep being ON both when SET instruction is still being driven or not driven. Use RST instruction to set the device to be OFF.

Example

Ladder diagram:

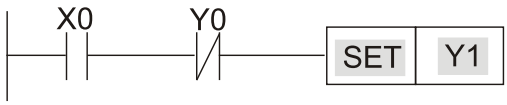

Instruction code		Operation
LD	X0	Load X0 (the contact A)
ANI	Y0	Connect Y0 (the contact B) in parallel
SET	**Y1**	**Action continues (ON)**

Instruction	Function					
RST	Clear contact or register					
Operand	X0–X17	Y0–Y17	M0–M799	T0–159	C0–C79	D0–D399
	-	✓	✓	✓	✓	✓

Description

When the RST instruction is driven, the actions of the designated devices are:

Device	Status
Y, M	Coil and contacts are set to “OFF”.
T, C	The current value of the timer or the counter are set to “0”, the coil and the contacts are set to “OFF”.
D	The value is set to “0”.

If RST instruction is not being executed, the status of the designated device stays intact.

Example

Ladder diagram:

Instruction code		Operation
LD	X0	Load X0 (the contact A)
RST	**Y5**	**Clear contact or register**

Instruction	Function	
TMR	16-bit timer	
Operand	T-K	T0–T159, K0–K32,767
	T-D	T0–T159, D0–D399

Description

When TMR instruction is executed, the designated coil of the timer receives power, and the timer starts to count. When the counting reaches the setting value (current value ≥ setting value), the contact will be:

Normally Open (NO) contact	Closed
Normally Close (NC) contact	Open

If RST instruction is not being executed, the status of the designated device stays intact.

Example

Ladder diagram:

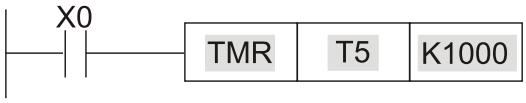

Instruction code		Operation
LD	X0	Load X0 (the contact A)
TMR	**T5 K1000**	**T5 Timer Setting value is K1000**

Instruction	Functions	
CNT	16-bit counter	
Operand	C-K	C0–C79, K0–K32,767
	C-D	C0–C79, D0–D399
Description	When CNT instruction goes from OFF→ON, the designated counter coil is from losing power→receiving power, and the current value in the counter plus 1. When the counting reaches the setting value (current value = setting value), the contact will be: Normally Open (NO) contact: Closed Normally Close (NC) contact: Open If there are other counting pulses input after the counting reaches its target, the contact and current value stay intact. Use RST instruction to restart or reset the counting.	

Example

Ladder diagram:

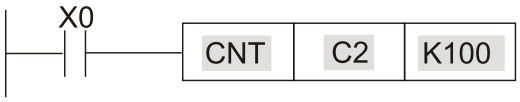

Instruction code		Operation
LD	X0	Load X0 (the contact A)
CNT	**C2 K100**	**C2 Counter** **Setting value is K100**

Instruction	Function
MC / MCR	The connection / disconnection between the contacts of common lists
Operand	N0–N7

Description

MC instruction is master-control start instruction. When MC instruction is executed, the execution of instructions between MC and MCR are not be interrupted. When MC instruction is OFF, the execution of instructions between MC and MCR are:

Instruction type	Description
General purpose timer	The value returns 0, the coil loses power, and no action for the contacts
Counter	The coil loses power, the value and the contacts stay intact
The coil driven by OUT instruction	None receives power
Devices driven by SET and RST instructions	Keep the current status
Application instructions	All disabled

MCR is the master-control end instruction that is placed in the end of the master-control program. There should not be any contact instructions prior to MCR instruction.

MC-MCR master-control program instructions support the nested program structure (max. 8 layers) and use the instructions in the order N0–N7.

Example

Ladder diagram:

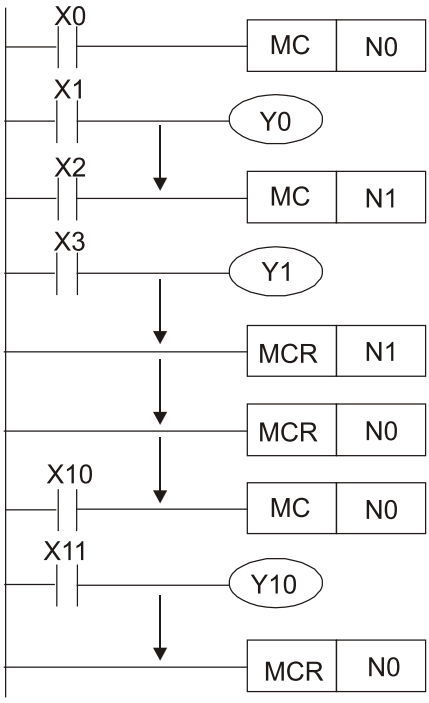

Instruction code		Description
LD	X0	Load X0 (the contact A)
MC	**N0**	**The connection of the NO common serial contacts**
LD	X1	Load X1 (the contact A)
OUT	Y0	Drive Coil Y0
⋮		
LD	X2	Load X2 (the contact A)
MC	**N1**	**The connection of the N1 common serial contacts**
LD	X3	Load X3 (the contact A)
OUT	Y1	Drive Coil Y1
⋮		
MCR	**N1**	**Remove the connection of the N1 common serial contacts**
⋮		
MCR	**N0**	**Remove the connection of the N0 common serial contacts**
⋮		
LD	X10	Load X10 (the contact A)
MC	**N0**	**The connection of the NO common serial contacts**
LD	X11	Load X11 (the contact A)
OUT	Y10	Drive Coil Y10
⋮		
MCR	**N0**	**Remove the connection of the N0 common serial contacts**

Instruction	Function					
LDP	Rising edge detection					
Operand	X0–X17	Y0–Y17	M0–M799	T0–159	C0–C79	D0–D399
	✓	✓	✓	✓	✓	-
Description	The method of using LDP is the same as using LD, but the actions of the two instructions differ. LDP saves the current content and store the detected status of rising-edge to the accumulative register.					
Example	Ladder diagram: 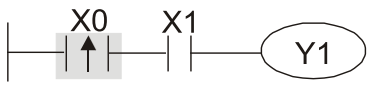			Instruction code		Description
				LDP	**X0**	**Rising edge of X0 detection starts**
				AND	X1	Connect X1 (the contact A) in serial
				OUT	Y1	Drive Coil Y1
Remark	See the specification of each model for the range of operands. If the status of a designated rising-edge is ON before the PLC is powered, the contact of the rising-edge is TRUE after PLC is powered.					

Instruction	Function					
LDF	Falling edge detection					
Operand	X0–X17	Y0–Y17	M0–M799	T0–159	C0–C79	D0–D399
	✓	✓	✓	✓	✓	-
Description	The method of using LDF is the same as using LD, but the actions of the two instructions differ. LDF saves the current content and store the detected status of falling-edge to the accumulative register.					
Example	Ladder diagram: 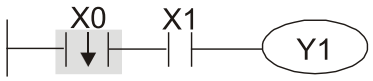			Instruction code		Description
				LDF	**X0**	**Falling edge of X0 detection starts**
				AND	X1	Connect X1 (the contact A) in serial
				OUT	Y1	Drive Coil Y1

Instruction	Function					
ANDP	Detect serial connection at rising edge					
Operand	X0–X17	Y0–Y17	M0–M799	T0–159	C0–C79	D0–D399
	✓	✓	✓	✓	✓	-
Description	ANDP instruction is used in the serial connection of the contacts' rising-edge detection					

Example

Ladder diagram:

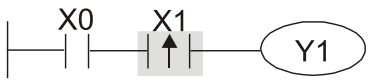

Instruction code		Description
LD	X0	Load X0 (the contact A)
ANDP	**X1**	**Detect serial connection at rising edge of X1**
OUT	Y1	Drive Coil Y1

Instruction	Function					
ANDF	Detect serial connection at falling edge					
Operand	X0–X17	Y0–Y17	M0–M799	T0–159	C0–C79	D0–D399
	✓	✓	✓	✓	✓	-
Description	ANDP instruction is used in the serial connection of the contacts' rising-edge detection					

Example

Ladder diagram:

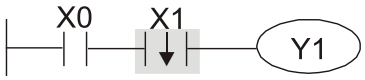

Instruction code		Description
LD	X0	Load X0 (the contact A)
ANDF	**X1**	**Detect serial connection at falling edge of X1**
OUT	Y1	Drive Coil Y1

Instruction	Function					
ORP	Detect parallel connection at rising edge					
Operand	X0–X17	Y0–Y17	M0–M799	T0–159	C0–C79	D0–D399
	✓	✓	✓	✓	✓	-
Description	ORP instruction is used in the parallel connection of the contacts' rising-edge detection					

Example

Ladder diagram:

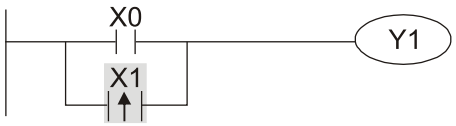

Instruction code		Description
LD	X0	Load X0 (the contact A)
ORP	**X1**	**Detect parallel connection at rising edge of X1**
OUT	Y1	Drive Coil Y1

Instruction	Function					
ORF	Detect parallel connection at falling edge					
Operand	X0–X17	Y0–Y17	M0–M799	T0–159	C0–C79	D0–D399
	✓	✓	✓	✓	✓	-
Description	ORF instruction is used in the parallel connection of the contacts' falling-edge detection					

Example

Ladder diagram:

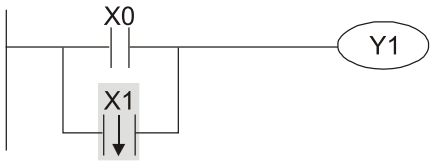

Instruction code		Description
LD	X0	Load X0 (the contact A)
ORF	**X1**	**Detect parallel connection at falling edge of X1**
OUT	Y1	Drive Coil Y1

Instruction	Function					
PLS	Upper differential output					
Operand	X0–X17	Y0–Y17	M0–M799	T0–159	C0–C79	D0–D399
	-	✓	✓	-	-	-
Description	Differential output at rising edge instruction. When X0 goes from OFF→ON (the rising-edge is triggered), PLS instruction is executed, M0 sends pulses once and the pulse length is one scanning time.					

Example

Ladder diagram:

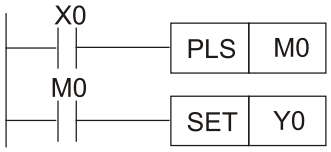

Sequence diagram:

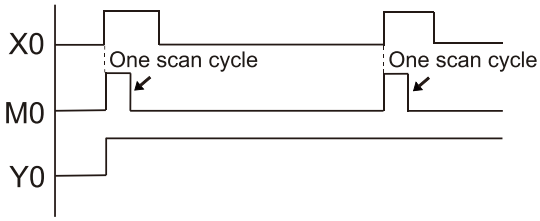

Instruction code		Description
LD	X0	Load X0 (the contact A)
PLS	**M0**	**Differential output at rising edge of M0**
LD	M0	Load M0 (the contact A)
SET	Y0	Maintain the action of Y0 (ON)

Instruction	Function					
PLF	Lower differential output					
Operand	X0–X17	Y0–Y17	M0–M799	T0–159	C0–C79	D0–D399
	-	✓	✓	-	-	-
Description	Differential output at falling edge instruction. When X0 goes from ON→OFF (the falling-edge is triggered), PLF instruction is executed, M0 sends pulses once and the pulse length is one scanning time.					

Example

Ladder diagram:

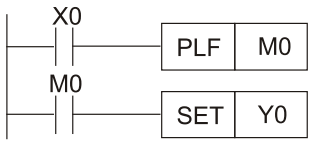

Sequence diagram:

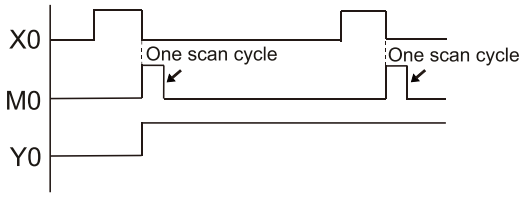

Instruction code		Description
LD	X0	Load X0 (the contact A)
PLF	**M0**	**Differential output at falling edge of M0**
LD	M0	Load M0 (the contact A)
SET	Y0	Maintain the action of Y0 (ON)

Instruction	Function
END	End the program
Operand	N/A
Description	END instruction has to be placed in the end of a ladder diagram or instruction program. PLC scans from address 0 to END instruction, and then return to address 0 to restart the scan.

Instruction	Function			
NOP	No operation			
Operand	N/A			
Description	NOP instruction does not perform any operations in the program; therefore, after the execution of NOP, the existing logical operation result will be kept. If you want to delete a certain instruction without altering the length of the program, you can use NOP instruction.			
Example	Ladder diagram:	Instruction code		Description
	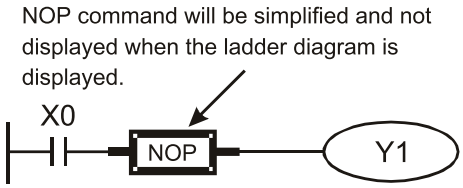	LD	X0	Load X0 (the contact B)
		NOP		**No operation**
		OUT	Y1	Drive Coil Y1

Instruction	Function			
INV	Inverse of operation results			
Operand	N/A			
Description	Invert the logical operation result before INV instruction, and store it in the accumulative register.			
Example	Ladder diagram: 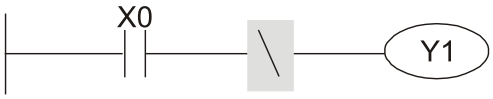	Instruction code		Description
		LD	X0	Load X0 (the contact B)
		INV		**Inverse operation result**
		OUT	Y1	Drive Coil Y1

Instruction	Function			
P	Pointer			
Operand	P0–P255			
Description	Pointer P is used for call instruction API 01 CALL of subprogram. The use of P does not need to start from number 0, and the number cannot be used repeatedly; otherwise, unexpected errors may occur.			
Example	Ladder diagram: 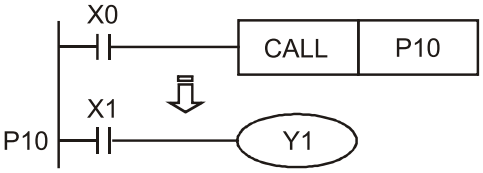	Instruction code		Description
		LD	X0	Load X0 (the contact A)
		CALL	P10	CALL instruction reaches P10
		⋮		
		P10		**Pointer P10**
		LD	X1	Load X1 (the contact A)
		OUT	Y1	Drive Coil Y1

15-6-3 Overview of application instructions

Category	API	Instruction code		P instruction	Function	STEPS	
		16-bit	32-bit			16-bit	32-bit
Loop Control	01	CALL	-	✓	Call subprograms	3	-
	02	SRET	-	-	Subprograms end	1	-
	06	FEND	-	-	Main programs end	1	-
Transmission Comparison	10	CMP	DCMP	✓	Compare output value	7	13
	11	ZCP	DZCP	✓	Zone comparison	9	17
	12	MOV	DMOV	✓	Move	5	9
	13	SMOV	DSMOV	✓	Shift move	11	21
	15	BMOV	–	✓	Block move	7	–
Arithmetic and Logical Operations	18	BCD	DBCD	✓	Convert BIN to BCD	5	9
	19	BIN	DBIN	✓	Convert BCD to BIN	5	9
	20	ADD	DADD	✓	BIN addition	7	13
	21	SUB	DSUB	✓	BIN subtraction	7	13
	22	MUL	DMUL	✓	BIN multiplication	7	13
	23	DIV	DDIV	✓	BIN division	7	13
	24	INC	DINC	✓	BIN increment (plus one)	3	5
	25	DEC	DDEC	✓	BIN decrement (minus one)	3	5
Rotation & Displacement	30	ROR	DROR	✓	Rotate right	5	–
	31	ROL	DROL	✓	Rotate left	5	–
Data processing	40	ZRST	–	✓	Zone reset	5	-
	41	DECO	DDECO	✓	Decode	7	13
	42	ENCO	DENCO	✓	Encode	7	13
	43	SUM	DSUM	✓	Sum of active bits	5	9
	44	BON	DBON	✓	Check specified bit status	7	13
	49	FLT	DFLT	✓	Convert BIN integer to binary floating-point number	5	9
Floating point operation	110	–	DECMP	✓	Binary floating-point number comparison	–	13
	111	–	DEZCP	✓	Binary floating-point number zone comparison	–	17
	116	–	DRAD	✓	Degree → Radian	–	9
	117	–	DDEG	✓	Radian → Degree	–	9
	120	–	DEADD	✓	Binary floating-point number addition	–	13
	121	–	DESUB	✓	Binary floating-point number subtraction	–	13
	122	–	DEMUL	✓	Binary floating-point number multiplication	–	13

Category	API	Instruction code		P instruction	Function	STEPS	
		16-bit	32-bit			16-bit	32-bit
	123	–	DEDIV	✓	Binary floating-point number division	–	13
	124	–	DEXP	✓	Binary floating-point number exponentiation	–	9
	125	–	DLN	✓	Binary floating-point number natural logarithm operation	–	9
	127	–	DESQR	✓	Binary floating-point number square root	–	9
	129	INT	DINT	✓	Binary floating-point number → BIN integer	5	9
	130	–	DSIN	✓	Binary floating-point number sine operation	–	9
	131	–	DCOS	✓	Binary floating-point number cosine operation	–	9
	132	–	DTAN	✓	Binary floating-point number tangent operation	–	9
	133	–	DASIN	✓	Binary floating-point number arcsine operation	–	9
	134	–	DACOS	✓	Binary floating-point number arccosine operation	–	9
	135	–	DATAN	✓	Binary floating-point number arctangent operation	–	9
	136	–	DSINH	✓	Binary floating-point number hyperbolic sine operation	–	9
	137	–	DCOSH	✓	Binary floating-point number hyperbolic cosine operation	–	9
	138	–	DTANH	✓	Binary floating-point number hyperbolic tangent operation	–	9
Others	147	SWAP	DSWAP	✓	Exchange the up / down 8 bits	3	5
Communication	150	MODRW	–	✓	Read / write Modbus data	7	–
RTC (real-time clock)	160	TCMP	–	✓	Real-time data comparison	11	–
	161	TZCP	–	✓	Zone comparison of real-time data	9	–
	162	TADD	–	✓	Real-time data addition	7	–
	163	TSUB	–	✓	Real-time data subtraction	7	–
	166	TRD	–	✓	Read real-time data	3	–
Gray code	170	GRY	DGRY	✓	Binary code → Gray code	5	9
	171	GBIN	DGBIN	✓	Gray code → Binary code	5	9

Category	API	Instruction code		P instruction	Function	STEPS	
		16-bit	32-bit			16-bit	32-bit
Contact type logical operation	215	LD&	DLD&	-	Contact type logical operation LD#	5	9
	216	LD|	DLD|	-	Contact type logical operation LD#	5	9
	217	LD^	DLD^	-	Contact type logical operation LD#	5	9
	218	AND&	DAND&	-	Contact type logical operation AND#	5	9
	219	AND|	DAND|	-	Contact type logical operation AND#	5	9
	220	AND^	DAND^	-	Contact type logical operation AND#	5	9
	221	OR&	DOR&	-	Contact type logical operation OR#	5	9
	222	OR|	DOR|	-	Contact type logical operation OR#	5	9
	223	OR^	DOR^	-	Contact type logical operation OR#	5	9
Contact type comparison	224	LD=	DLD=	-	Contact type comparison LD※	5	9
	225	LD>	DLD>	-	Contact type comparison LD※	5	9
	226	LD<	DLD<	-	Contact type comparison LD※	5	9
	228	LD<>	DLD<>	-	Contact type comparison LD※	5	9
	229	LD<=	DLD<=	-	Contact type comparison LD※	5	9
	230	LD>=	DLD>=	-	Contact type comparison LD※	5	9
	232	AND=	DAND=	-	Contact type comparison AND※	5	9
	233	AND>	DAND>	-	Contact type comparison AND※	5	9
	234	AND<	DAND<	-	Contact type comparison AND※	5	9
	236	AND<>	DAND<>	-	Contact type comparison AND※	5	9

Category	API	Instruction code		P instruction	Function	STEPS	
		16-bit	32-bit			16-bit	32-bit
	237	AND<=	DAND<=	-	Contact type comparison AND※	5	9
	238	AND>=	DAND>=	-	Contact type comparison AND※	5	9
	240	OR=	DOR=	-	Contact type comparison OR※	5	9
	241	OR>	DOR>	-	Contact type comparison OR※	5	9
	242	OR<	DOR<	-	Contact type comparison OR※	5	9
	244	OR<>	DOR<>	-	Contact type comparison OR※	5	9
	245	OR<=	DOR<=	-	Contact type comparison OR※	5	9
	246	OR>=	DOR>=	-	Contact type comparison OR※	5	9
Floating-point contact type comparison	275	-	FLD=	-	Floating-point number contact type comparison LD※	-	9
	276	-	FLD>	-	Floating-point number contact type comparison LD※	-	9
	277	-	FLD<	-	Floating-point number contact type comparison LD※	-	9
	278	-	FLD<>	-	Floating-point number contact type comparison LD※	-	9
	279	-	FLD<=	-	Floating-point number contact type comparison LD※	-	9
	280	-	FLD>=	-	Floating-point number contact type comparison LD※	-	9
	281	-	FAND=	-	Floating-point number contact type comparison AND※	-	9

Category	API	Instruction code		P instruction	Function	STEPS	
		16-bit	32-bit			16-bit	32-bit
	282	-	FAND>	-	Floating-point number contact type comparison AND※	-	9
	283	-	FAND<	-	Floating-point number contact type comparison AND※	-	9
	284	-	FAND<>	-	Floating-point number contact type comparison AND※	-	9
	285	-	FAND<=	-	Floating-point number contact type comparison AND※	-	9
	286	-	FAND>=	-	Floating-point number contact type comparison AND※	-	9
	287	-	FOR=	-	Floating-point number contact type comparison OR※	-	9
	288	-	FOR>	-	Floating-point number contact type comparison OR※	-	9
	289	-	FOR<	-	Floating-point number contact type comparison OR※	-	9
	290	-	FOR<>	-	Floating-point number contact type comparison OR※	-	9
	291	-	FOR<=	-	Floating-point number contact type comparison OR※	-	9
	292	-	FOR>=	-	Floating-point number contact type comparison OR※	-	9
Special instructions for drive	139	RPR	–	✓	Read parameters of drive	5	–
	140	WPR	–	✓	Write parameters of drive	5	–
	141	FPID	–	✓	Drive PID control mode	9	–
	142	FREQ	–	✓	Operation control for drive	7	–
	323	WPRA	–	-	Write the drive parameters in RAM	5	-

15-6-4 Instructions of application instructions

Instruction codes can be divided into 16-bit and 32-bit instructions. We prefix "D" to instruction code to indicate 32-bit instruction, and suffix “P” to instruction code to indicate a pulse executing instruction.

API	Instruction code	Operand	Function
01	**CALL** P	S	Call subprograms

Type / Operand	Bit devices			Word devices							
	X	Y	M	K	H	KnX	KnY	KnM	T	C	D

Caution for using operand:
- Operand S can assign P
- Operand S of MP300 can assign P0–P63

16-bit instruction (3 steps)

CALL	Continuous execution type	CALLP	Pulse execution type

32-bit instruction

-	-	-	-

Associated flag: none

Description	
	● S: the pointer of the call subprogram ● Subprogram must be placed after FEND instruction. ● Subprogram must end with SRET instruction. ● Refer to the description and example of FEND instruction for more details.

API	Instruction code	Operand	Functions
02	**SRET**	-	Subprograms end

Type / Operand	Bit devices			Word devices							
	X	Y	M	K	H	KnX	KnY	KnM	T	C	D

Caution for using operand:
- No operand
- No contact to drive the instruction is required.

16-bit instruction (1 step)

SRET	Continuous execution type	-	-

32-bit instruction

-	-	-	-

Associated flag: none

Description	
	● No contact to drive the instruction is required. Automatically returns program execution to the address after CALL instruction. ● This instruction code indicates the end of subprogram. The subprogram returns to main program and begins the execution with the instruction after CALL instruction. ● Refer to the description and example of FEND instruction for more details.

API	Instruction code	Operand	Function
06	**FEND**	-	Main programs end

Type / Operand	Bit devices			Word devices							
	X	Y	M	K	H	KnX	KnY	KnM	T	C	D

Caution for using operand:
- No operand
- No contact to drive the instruction is required.

16-bit instruction (1 step)

FEND	Continuous execution type	-	-

32-bit instruction

-	-	-	-

Associated flag: none

Description

- This instruction code indicates the end of main program. It's the same as END instruction in PLC operation process.
- The subprogram of CALL instruction must be placed after FEND instruction, and each subprogram must end with SRET instruction.
- An END instruction is also required when using FEND instruction. But END instruction must be placed after main program and subprogram to the last.

CALL instruction program flow

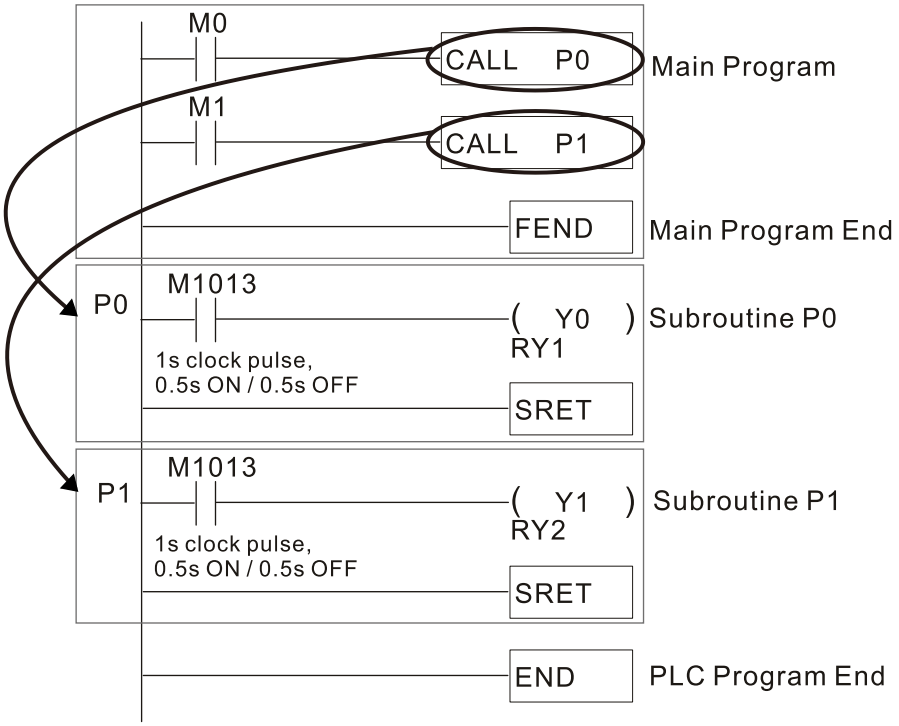

API	Instruction code			Operand	Function
10	D	**CMP**	P	S_1, S_2, D	Compare output value

Type / Operand	Bit devices			Word devices							
	X	Y	M	K	H	KnX	KnY	KnM	T	C	D
S_1				*	*	*	*	*	*	*	*
S_2				*	*	*	*	*	*	*	*
D		*	*								

Caution for using operand:

- Operand D occupies 3 consecutive devices.

16-bit instruction (7 steps)

CMP	Continuous execution type	CMPP	Pulse execution type

32-bit instruction (13 steps)

DCMP	Continuous execution type	DCMPP	Pulse execution type

Associated flag: none

Description

- S_1: comparison value 1
  S_2: comparison value 2
  D: comparison result
- Compare operand S_1 and S_2, and the comparison result is stored in D.
- The two comparison values are compared algebraically, and the two values are signed binary values. When b15 = 1 in 16-bit instruction, the comparison regards the value as negative binary values.

Example

- Designate device Y0, and operand D automatically occupies Y0, Y1, and Y2.
- When X10 = ON, CMP instruction is executed, and one of Y0, Y1, and Y2 will be ON. When X10 = OFF, CMP instruction is not executed, and Y0, Y1, and Y2 remain their status before X10 = OFF.
- If you need to obtain a comparison result with ≥, ≤, and ≠, make a serial-parallel connection between Y0–Y2.

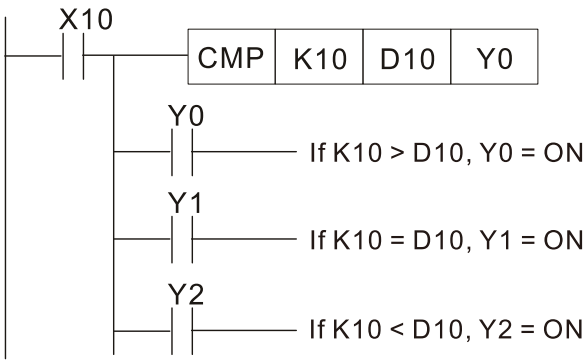

- To clear the comparison result, use RST or ZRST instruction.

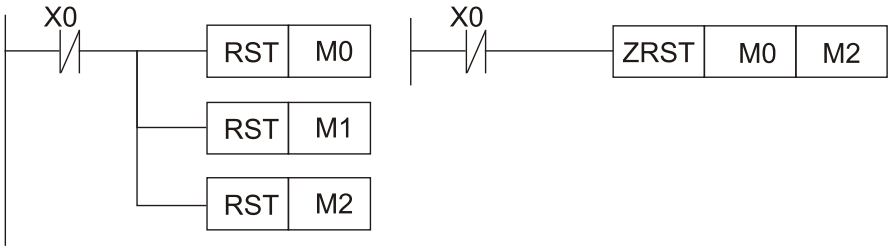

API	Instruction code			Operand	Function
11	D	**ZCP**	P	S_1, S_2, S, D	Zone comparison

Type / Operand	Bit devices			Word devices							
	X	Y	M	K	H	KnX	KnY	KnM	T	C	D
S_1				*	*	*	*	*	*	*	*
S_2				*	*	*	*	*	*	*	*
S				*	*	*	*	*	*	*	*
D		*	*								

Caution for using operand:
- The content in S_1 should be smaller than the content in S_2.
- Operand D occupies 3 consecutive devices.

16-bit instruction (9 steps)

ZCP	Continuous execution type	ZCPP	Pulse execution type

32-bit instruction (17 steps)

DZCP	Continuous execution type	DZCPP	Pulse execution type

Associated flag: none

Description

- S_1: lower bound of zone comparison
  S_2: upper bound of zone comparison
  S: comparison value
  D: comparison result
- S is compared with its S_1 and S_2, and the result is stored in D.
- When $S_1 > S_2$, the instruction performs comparison by using S_1 as the lower / upper bound.
- The two comparison values are compared algebraically, and the two values are signed binary values. When b15 = 1 in 16-bit instruction, the comparison regards the value as negative binary values.

Example

- Designate device M0, and operand D automatically occupies M0, M1 and M2.
- When X0 = ON, ZCP instruction is executed, and one of M0, M1, and M2 will be ON. When X0 = OFF, ZCP instruction is not executed, and M0, M1, and M2 remain their status before X0 = OFF.
- If you need to obtain a comparison result with ≥, ≤, and ≠, make a serial-parallel connection between M0–M2.

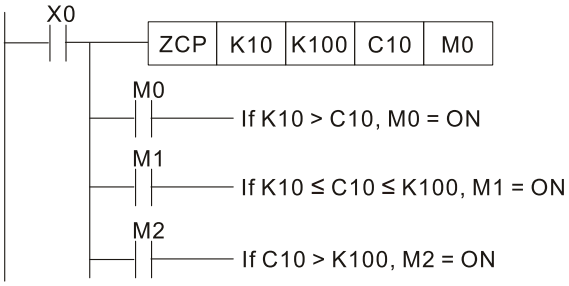

- To clear the comparison result, use RST or ZRST instruction.

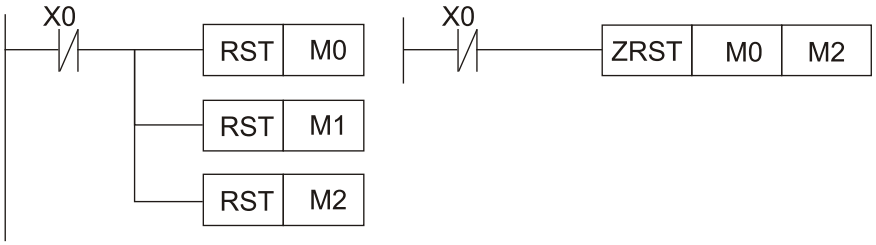

API	Instruction code			Operand	Function
12	D	**MOV**	P	S, D	Move

Type / Operand	Bit devices			Word devices							
	X	Y	M	K	H	KnX	KnY	KnM	T	C	D
S				*	*	*	*	*	*	*	*
D							*	*	*	*	*

Caution for using operand: none

16-bit instruction (5 steps)

MOV	Continuous execution type	MOVP	Pulse execution type

32-bit instruction (9 steps)

DMOV	Continuous execution type	DMOVP	Pulse execution type

Associated flag: none

Description

- S: source of data
  D: destination of data
- When this instruction is executed, the content of S is moved directly to D. When this instruction is not executed, the content of D remains unchanged.

Example

- When X0 = OFF, the content in D10 remains unchanged. If X0 = ON, the value K10 is moved to D10 data register.
- When X1 = OFF, the content in D10 remains unchanged. If X1 = ON, the current value T0 is moved to D10 data register.

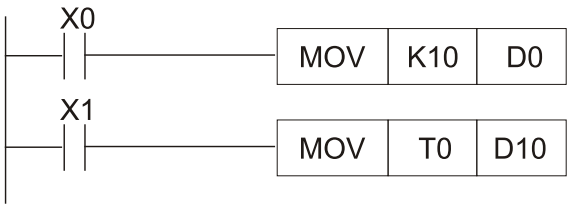

API	Instruction code	Operand	Function
13	**SMOV** P	S, m_1, m_2, D, n	Shift move

Type / Operand	Bit devices			Word devices							
	X	Y	M	K	H	KnX	KnY	KnM	T	C	D
S				*	*	*	*	*	*	*	*
D							*	*	*	*	*

Caution for using operand: none

16-bit instruction (11 steps)

SMOV	Continuous execution type	SMOVP	Pulse execution type

32-bit instruction (21 steps)

DSMOV	Continuous execution type	DSMOVP	Pulse execution type

Associated flag: M1168

Description

- S: source of data
  m_1: start digit to be moved of the source data
  m_2: number of digits to be moved of the source data
  D: destination device
  n: start digit of the destination position for the moved digits
- BCD mode (M1168 = OFF): in this mode, SMOV enables to operate BCD number, the operation is similar to the way SMOV operates decimal numbers. That is to say, this instruction copies the designated digit of the operand S (a 4-digit BCD number), and send to the operand D (also a 4-digit BCD number).
- BIN mode (M1168 = ON): this instruction copies the designated digit of the operand S (a 4-digit decimal number), and send to the operand D (also a 4-digit decimal number). The current data on the target register will be covered.
- Scope of m_1: 1–4
- Scope of m_2: 1–m_1 (m_2 cannot be larger than m_1)
- Scope of n: m_2 –4 (n cannot be smaller than m_2)

Example

- Example 1
  When M1168 = OFF (BCD mode) and X0 = ON, transfer the two-digit content that starts calculating from the 4th digit (means the thousands digit) of D10's decimal value to the two digit content that starts from the 3rd digit (means the hundreds digit) of D20's decimal number. 10^3 and 10^0 of D20 remain unchanged after this instruction is executed.

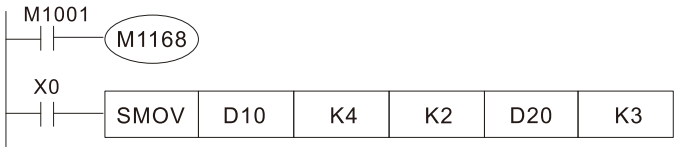

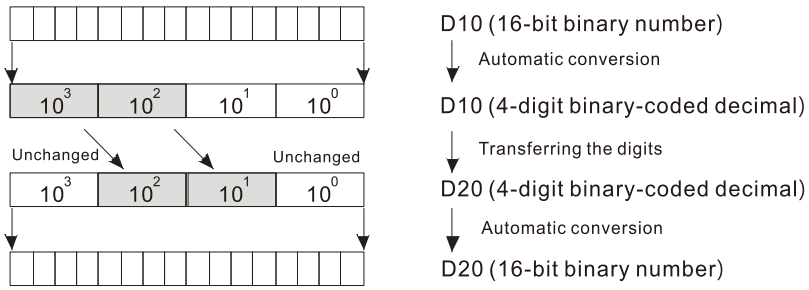

- Example 2

When M1168 = ON (BIN mode) and use SMOV instruction, D10 and D20 does not be converted in BCD format but be moved in BIN format (4 digits as a unit).

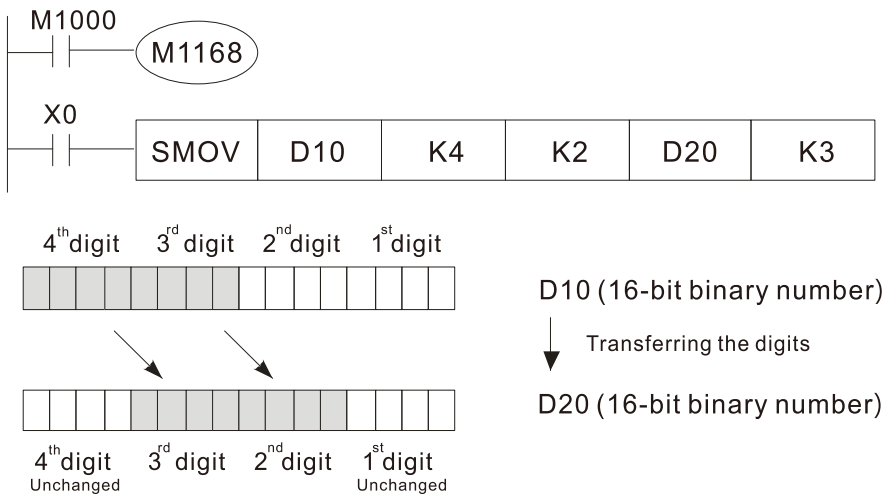

API	Instruction code	Operand	Function
15	**BMOV** P	S, D, n	Block move

Operand \ Type	Bit devices			Word devices							
	X	Y	M	K	H	KnX	KnY	KnM	T	C	D
S						*	*	*	*	*	*
D							*	*	*	*	*
n				*	*				*	*	

Caution for using operand:
- Scope of n = 1–512

16-bit instruction (7 steps)			
BMOV	Continuous execution type	BMOVP	Pulse execution type

32-bit instruction			
-	-	-	-

Associated flag: none

Description

- S: start of source devices
  D: start of destination devices
  n: number of data to be moved
- The contents in n registers starting from the device designated by S is moved to n registers starting from the device designated by D. If n exceeds the actual number of available source devices, only the devices that fall within the valid range will be used.

Example

- Example 1
  When X10 = ON, the contents of four registers of D1–D3 is moved to the four registers of D20–D23.

- Example 2
  Assume the bit devices KnX, KnY, and KnM are designated for moving, the number of digits of S and D has to be the same, that is, their n has to be the same.

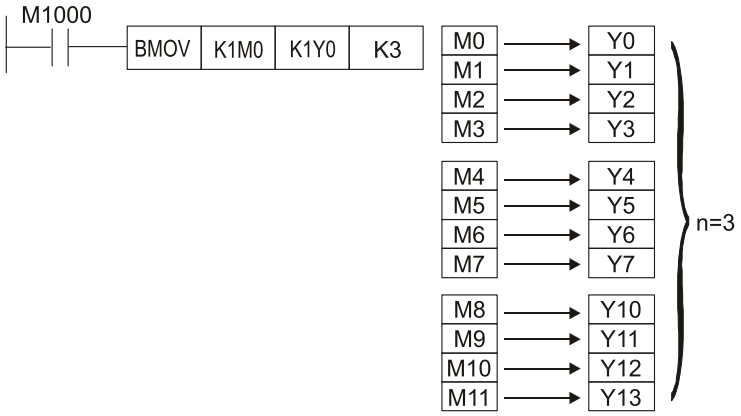

- Example 3
  To avoid coincidence of the device numbers to be moved designated by the two operands and cause confusion, be aware of the arrangement on the designated device numbers, as shown below:
  When S > D, the instruction is processed following the order①→②→③.

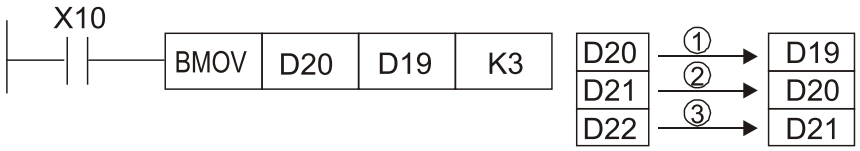

	When S < D, the instruction is processed following the order③→②→①.

API	Instruction code			Operand	Function
18	D	**BCD**	P	S, D	Convert BIN to BCD

Type / Operand	Bit devices			Word devices							
	X	Y	M	K	H	KnX	KnY	KnM	T	C	D
S						*	*	*	*	*	*
D							*	*	*	*	*

Caution for using operand: none

16-bit instruction (5 steps)

BCD	Continuous execution type	BCDP	Pulse execution type

32-bit instruction (9 steps)

DBCD	Continuous execution type	DBCDP	Pulse execution type

Associated flag:

Description

- S: source of data
  D: destination of data
- The content in S (BIN value, 0–9999) is converted into BCD value and stored in D.
- Operand S, D use device F, and they can only use 16-bit instructions.

Example

- When X0 = ON, the binary value of D10 is converted into BCD value, and the unit digit of the conversion result is stored in K1Y0 (Y0–Y3, the 4-bit devices).

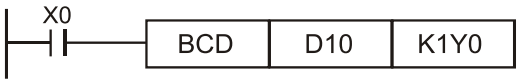

When D10 = 001E (Hex) = 0030 (decimal), the execution result is: Y0–Y3 = 0000 (BIN).

API	Instruction code			Operand	Function
19	D	**BIN**	P	S, D	Convert BCD to BIN

Type / Operand	Bit devices			Word devices							
	X	Y	M	K	H	KnX	KnY	KnM	T	C	D
S						*	*	*	*	*	*
D							*	*	*	*	*

Caution for using operand: none

16-bit instruction (5 steps)

BIN	Continuous execution type	BINP	Pulse execution type

32-bit instruction (9 steps)

DBIN	Continuous execution type	DBINP	Pulse execution type

Associated flag:

Description

- S: source of data
  D: conversion result
- The content in S (BCD value, 0–9999) is converted into BIN value and stored in D.
- The scope of valid value of S is BCD: 0–9,999, DBCD: 0–99,999,999

Example

- When X0 = ON, the BCD value of K1X20 is converted to BIN value and stored in D10.

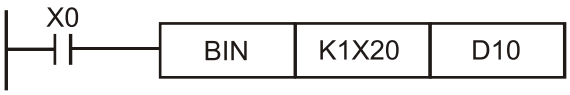

Remark

- When PLC needs to read an external DIP switch in BCD format, BIN instruction has to be first adopted to convert the read data into BIN value and store the data in PLC.

API	Instruction code			Operand	Function
20	D	**ADD**	P	S_1, S_2, D	BIN addition

Operand \ Type	Bit devices			Word devices							
	X	Y	M	K	H	KnX	KnY	KnM	T	C	D
S_1				*	*	*	*	*	*	*	*
S_2				*	*	*	*	*	*	*	*
D							*	*	*	*	*

Caution for using operand: none

16-bit instruction (7 steps)

ADD	Continuous execution type	ADDP	Pulse execution type

32-bit instruction (13 steps)

DADD	Continuous execution type	DADDP	Pulse execution type

Associated flag:

M1020: Zero flag
M1021: Borrow flag
M1022: Carry flag
See the following descriptions.

Description

- S_1: summand
  S_2: addend
  D: sum
- This instruction adds S_1 and S_2 in BIN format and store the result in D.
- The highest bit is symbolic bit 0 (+) and 1 (-), which is suitable for algebraic addition, e.g. 3 + (-9) = -6.
- Flag changes in binary addition:
  1. If the operation result = 0, zero flag M1020 = ON.
  2. If the operation result < -32,768, borrow flag M1021 = ON.
  3. If the operation result > 32,767, carry flag M1022 = ON.

Example

- In 16-bit BIN addition:
  When X0 = ON, the content in D0 plus the content in D10 and the sum is stored in D20.

Remark

- Flags and the positive / negative sign of the values:

16-bit:

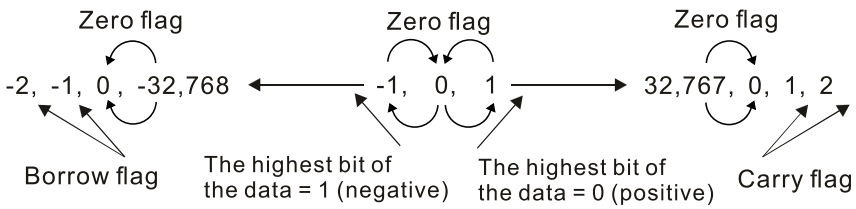

32-bit:

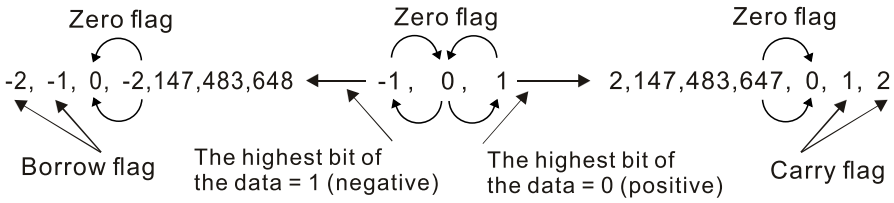

API	Instruction code			Operand	Function
21	D	**SUB**	P	S_1, S_2, D	BIN subtraction

Type / Operand	Bit devices			Word devices							
	X	Y	M	K	H	KnX	KnY	KnM	T	C	D
S_1				*	*	*	*	*	*	*	*
S_2				*	*	*	*	*	*	*	*
D							*	*	*	*	*

Caution for using operand: none

16-bit instruction (7 steps)

SUB	Continuous execution type	SUBP	Pulse execution type

32-bit instruction (13 steps)

DSUB	Continuous execution type	DSUBP	Pulse execution type

Associated flag:

M1020: Zero flag
M1021: Borrow flag
M1022: Carry flag
See the following descriptions.

Description

- S_1: minuend
  S_2: subtrahend
  D: difference
- This instruction subtracts S_1 and S_2 in BIN format and stores the result in D.
- The highest bit is symbolic bit 0 (+) and 1 (-), which is suitable for algebraic subtraction.
- Flag changes in binary subtraction:
  1. If the operation result = 0, zero flag M1020 = ON.
  2. If the operation result < -32,768, borrow flag M1021 = ON.
  3. If the operation result > 32,767, carry flag M1022 = ON.

Example

- In 16-bit BIN subtraction:
  When X0 = ON, the content in D0 minus the content in D10 and the difference is stored in D20.

API	Instruction code			Operand	Function
22	D	**MUL**	P	S_1, S_2, D	BIN multiplication

Type / Operand	Bit devices			Word devices							
	X	Y	M	K	H	KnX	KnY	KnM	T	C	D
S_1				*	*	*	*	*	*	*	*
S_2				*	*	*	*	*	*	*	*
D							*	*	*	*	*

Caution for using operand:

- In 16-bit instruction, operand D occupies 2 consecutive devices.

16-bit instruction (7 steps)

MUL	Continuous execution type	MULP	Pulse execution type

32-bit instruction (13 steps)

DMUL	Continuous execution type	DMULP	Pulse execution type

Associated flag: none

Description

- S_1: Multiplicand
  S_2: Multiplicator
  D: Product
- This instruction multiplies S_1 by S_2 in BIN format and stores the result in D.
- In 16-bit BIN multiplication,

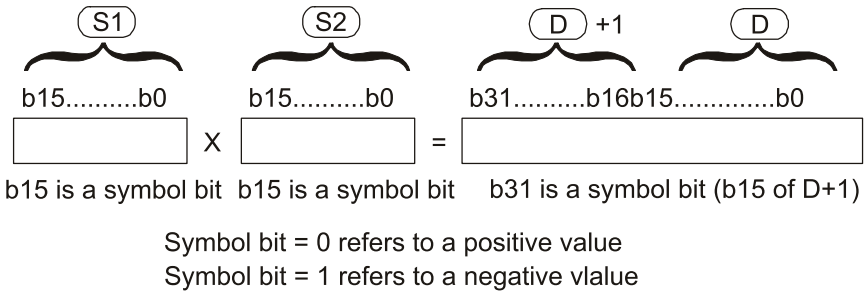

Symbol bit = 0 refers to a positive value
Symbol bit = 1 refers to a negative vlalue

When D serves as a bit device, it can designate K1–K4 and construct a 16-bit result, occupying consecutive 2 groups of 16-bit data.

Example

- The 16-bit D0 is multiplied by the 16-bit D10 and brings forth a 32-bit product. The higher 16 bits are stored in D21 and the lower 16-bit are stored in D20. ON / OFF of the most left bit indicates the positive / negative status of the result value.

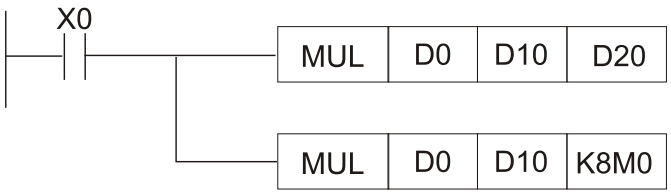

API	Instruction code			Operand	Function
23	D	**DIV**	P	S_1, S_2, D	BIN division

Type / Operand	Bit devices			Word devices							
	X	Y	M	K	H	KnX	KnY	KnM	T	C	D
S_1				*	*	*	*	*	*	*	*
S_2				*	*	*	*	*	*	*	*
D							*	*	*	*	*

Caution for using operand:

- In 16-bit instruction, operand D occupies 2 consecutive devices.

16-bit instruction (7 steps)

DIV	Continuous execution type	DIVP	Pulse execution type

32-bit instruction (13 steps)

DDIV	Continuous execution type	DDIVP	Pulse execution type

Associated flag: none

Description

- S_1: Dividend
  S_2: Divisor
  D: Quotient and remainder
- This instruction divides S_1 and S_2 in BIN format and stores the result in D. Be careful with the positive / negative signs of S_1, S_2 and D when doing 16-bit operation.
- In 16-bit BIN division,

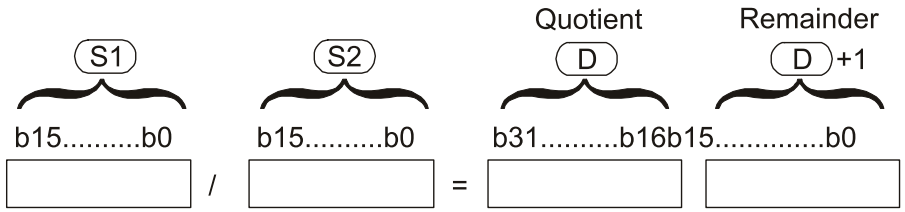

When D serves as a bit device, it can designate K1–K4 and construct a 16-bit result, occupying consecutive 2 groups of 16-bit data and bringing forth the quotient and remainder.

Example

- When X0 = ON, D0 is divided by D10 and the quotient will be stored in D20 and remainder in D21. ON / OFF of the highest bit indicates the positive / negative status of the result value.

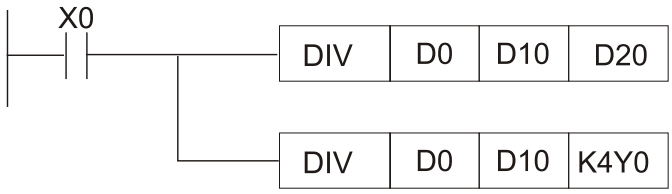

API	Instruction code			Operand	Function
24	D	**INC**	P	D	BIN increment (plus one)

Type / Operand	Bit devices			Word devices							
	X	Y	M	K	H	KnX	KnY	KnM	T	C	D
D							*	*	*	*	*

Caution for using operand: none

16-bit instruction (3 steps)

INC	Continuous execution type	INCP	Pulse execution type

32-bit instruction (5 steps)

DINC	Continuous execution type	DINCP	Pulse execution type

Associated flag: none

Description

- D: destination devices
- If the instruction is not a pulse execution one, the content in the designated device D will plus "1" in every scan period whenever the instruction is executed.
- This instruction generally adopts pulse execution instructions (INCP).
- In 16-bit operation, 32,767 plus 1 and obtains -32,768. In 32-bit operation, 2,147,483,647 plus 1 and obtains -2,147,483,648.

Example

- When X0 = OFF→ON, the content in D0 plus 1 automatically.

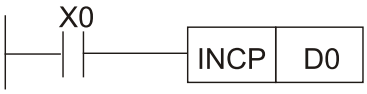

API	Instruction code			Operand	Function
25	D	**DEC**	P	D	BIN decrement (minus one)

Type / Operand	Bit devices			Word devices							
	X	Y	M	K	H	KnX	KnY	KnM	T	C	D
D							*	*			

Caution for using operand: none

16-bit instruction (3 steps)

DEC	Continuous execution type	DECP	Pulse execution type

32-bit instruction (5 steps)

DECC	Continuous execution type	DDECP	Pulse execution type

Associated flag: none

Description

- D: destination devices
- If the instruction is not a pulse execution one, the content in the designated device D will minus "1" in every scan period whenever the instruction is executed.
- This instruction generally adopts pulse execution instructions (DECP).
- In 16-bit operation, -32,768 minus 1 and obtains 32,767. In 32-bit operation, -2,147,483,648 minus 1 and obtains 2,147,483,647.

Example

- When X0 = OFF→ON, the content in D0 minus 1 automatically.

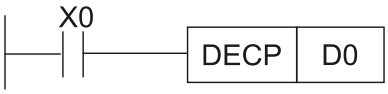

API	Instruction code			Operand	Function
30	D	**ROR**	P	D, n	Rotate right

Type / Operand	Bit devices			Word devices							
	X	Y	M	K	H	KnX	KnY	KnM	T	C	D
D							*	*	*	*	*
n				*	*						

Caution for using operand:

- If D is designated as KnY, KnM, only K4 (16-bit) is valid.
- Scope of n = K1–K16 (16-bit)

16-bit instruction (5 steps)

ROR	Continuous execution type	RORP	Pulse execution type

32-bit instruction (9 steps)

DROR	Continuous execution type	DRORP	Pulse execution type

Associated flag: M1022, Carry flag

Description

- D: device to be rotated
  n: number of bits to be rotated in 1 rotation
- This instruction rotates the device content designated by D to the right for n bits.
- This instruction generally adopts pulse execution instructions (RORP).

Example

- When X0 = OFF→ON, the 16 bits (4 bits as a group) in D10 rotates to the right, as shown in the figure below. The bit marked with ※ is sent to carry flag M1022.

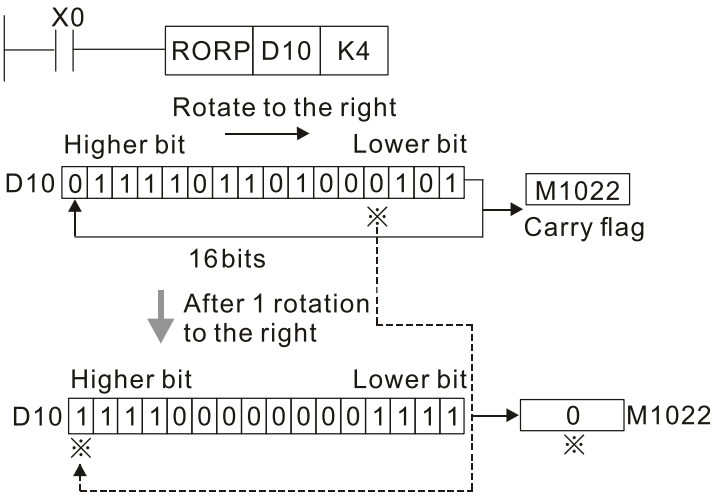

API	Instruction code			Operand	Function
31	D	**ROL**	P	D, n	Rotate left

Type / Operand	Bit devices			Word devices							
	X	Y	M	K	H	KnX	KnY	KnM	T	C	D
D							*	*	*	*	*
n				*	*						

Caution for using operand:

- If D is designated as KnY, KnM, only K4 (16-bit) is valid.
- Scope of n = K1–K16 (16-bit)

16-bit instruction (5 steps)

ROL	Continuous execution type	ROLP	Pulse execution type

32-bit instruction (9 steps)

DROL	Continuous execution type	DROLP	Pulse execution type

Associated flag: M1022, Carry flag

Description

- D: device to be rotated
  n: number of bits to be rotated in 1 rotation
- This instruction rotates the device content designated by D to the left for n bits.
- This instruction generally adopts pulse execution instructions (ROLP).

Example

- When X0 = OFF→ON, the 16 bits (4 bits as a group) in D10 rotates to the left, as shown in the figure below. The bit marked with ※ is sent to carry flag M1022.

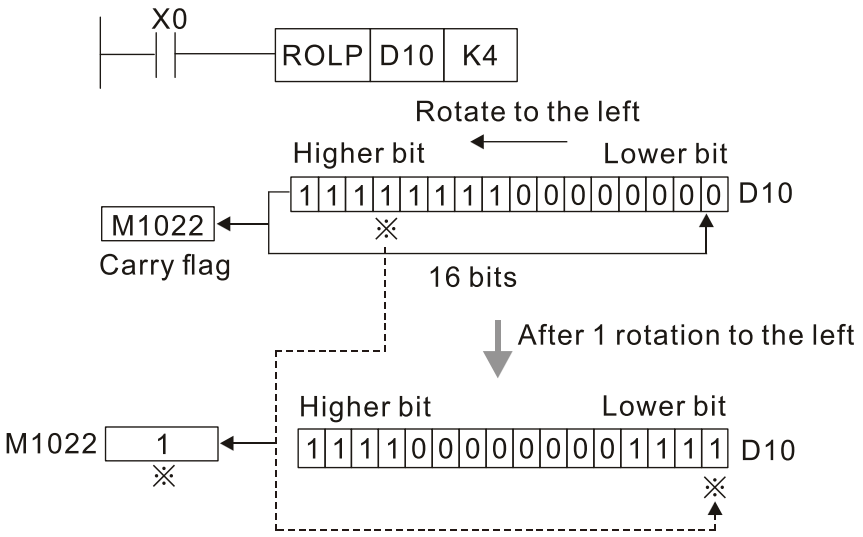

API	Instruction code			Operand	Function
40		**ZRST**	P	D_1, D_2	Zone reset

Type / Operand	Bit devices			Word devices							
	X	Y	M	K	H	KnX	KnY	KnM	T	C	D
D_1		*	*						*	*	*
D_2		*	*						*	*	*

Caution for using operand:

- Number of operand $D_1 \leq$ number of operand D_2
- Operand D_1 and D_2 have to designate devices of the same type.
- See the specification of each model for the scope of device's usage.

16-bit instruction (5 steps)

ZRST	Continuous execution type	ZRSTP	Pulse execution type

32-bit instruction

-	-	-	-

Associated flag: none

Description

- D_1: the start device of zone reset
  D_2: the end device of zone reset
- When number of operand D_1 > number of operand D_2, only operand designated by D_2 will be reset.

Example

- When X0 = ON, auxiliary relay M300 to M399 will be reset to OFF.
- When X1 = ON, 16-bit counter C0 to C127 will all be reset.
  (write in 0 and reset the contact and coil to OFF)
- When X10 = ON, timer T0 to T127 will be reset to OFF.
  (write in 0 and reset the contact and coil to OFF)
- When X3 = ON, data register D0 to D100 will be reset to 0

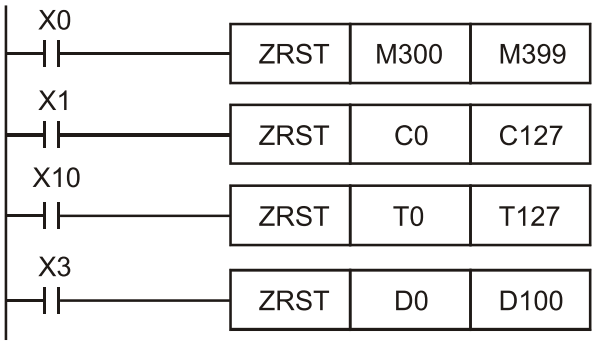

Remark

- Devices (e.g., bit device Y, M; and word device T, C, D) can be individually reset by RST instruction.

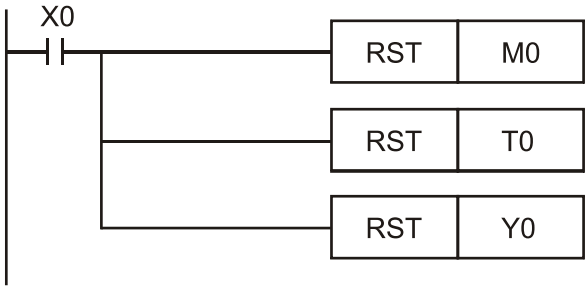

API	Instruction code	Operand	Function
41	**DECO** P	S, D, n	Decode

Type / Operand	Bit devices			Word devices							
	X	Y	M	K	H	KnX	KnY	KnM	T	C	D
S	*	*	*	*	*				*	*	*
D		*	*				*	*	*	*	*
n				*	*						

Caution for using operand: none

16-bit instruction (7 steps)

DECO	Continuous execution type	DECOP	Pulse execution type

32-bit instruction (13 steps)

DDECO	Continuous execution type	DDECOP	Pulse executio n type

Associated flag: none

Description

- S: source device to be decoded
  D: device for storing the decoded result
  n: length of decoded bits
- The instruction decodes the lower “n” bits of S and stores the result of “2^n” bits in D.
- This instruction generally adopts pulse execution instructions (DECOP).
- When operand D is bit device, n = 1–8, and when operand D is word device, n = 1–4.

Example

- Example 1
  1. When D is used as a bit device, the valid range is $0 < n \leq 8$. Error occurs when n = 0 or n > 8.
  2. When n = 8, the maximum points to decode is 2^8 = 256 points.
  3. When M200 = OFF→ON, this instruction decodes the content in X0–X2 to M100–M107
  4. If S = 3, M103 (third bit from M100) = ON.
  5. After executing the instruction, M200 becomes OFF. The decoded results have been output retain their operation.

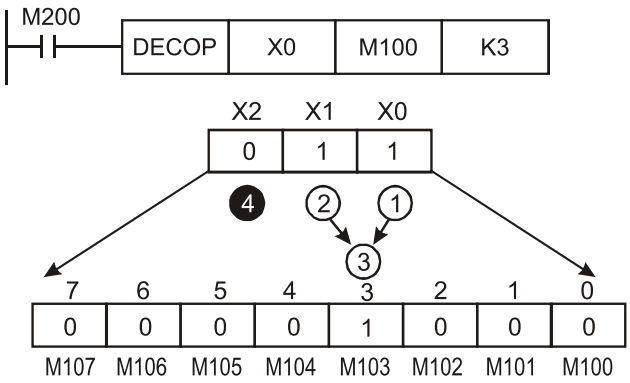

- Example 2
  1. When D is used as a word device, the valid range is $0 < n \leq 4$. Error occurs when n = 0 or n > 4.
  2. When n = 4, the maximum points to decode is 2^4 = 16 points.
  3. When M200 = OFF→ON, this instruction decodes the content in D10 (b2–b0) to D20 (b7–b0). The unused bits in D20 (b15–b8) become 0.
  4. The lower 3 bits of D10 are decoded and stored in the lower 8 bits of D20. The higher 8 bits of D20 are all 0.
  5. After executing the instruction, M200 becomes OFF. The decoded results have been output retain their operation.

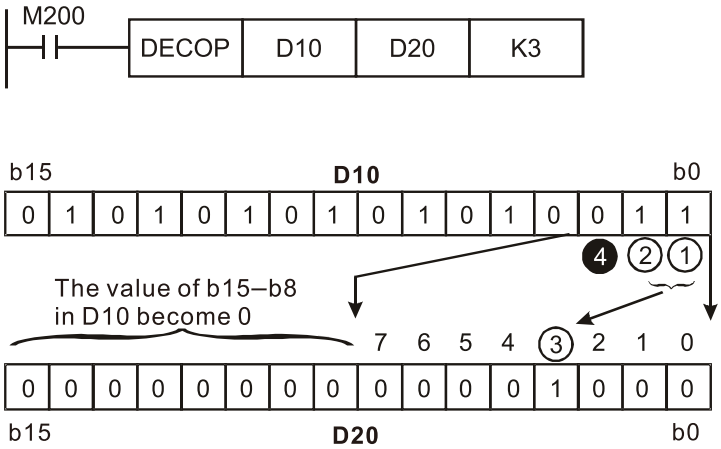
M200
DECOP
D10
D20
K3
b15
D10
b0
0 1 0 1 0 1 0 1 0 1 0 1 0 0 1 1
4 2 1
The value of b15–b8
in D10 become 0
7 6 5 4 3 2 1 0
0 0 0 0 0 0 0 0 0 0 0 0 1 0 0 0
b15
D20
b0

API	Instruction code	Operand	Function
42	**ENCO** P	S, D, n	Decode

Type / Operand	Bit devices			Word devices							
	X	Y	M	K	H	KnX	KnY	KnM	T	C	D
S	*	*	*						*	*	*
D							*	*	*	*	*
n				*	*						

Caution for using operand: none

16-bit instruction (7 steps)

ENCO	Continuous execution type	ENCOP	Pulse execution type

32-bit instruction (13 steps)

DENCO	Continuous execution type	DENCOP	Pulse execution type

Associated flag: none

Description

- S: source device to be decoded
  D: device for storing the decoded result
  n: length of decoded bits
- The instruction decodes the lower “n” bits of S and stores the result in D.
- If several bits of S are 1, the first bit that is 1 will be processed orderly from high bit to low bit.
- This instruction generally adopts pulse execution instructions (ENCOP).
- When operand S is bit device, n = 1–8, and when operand S is word device, n = 1–4.

Example

- Example 1
  1. When S is used as a bit device, the valid range is $0 < n \leq 8$. Error occurs when n = 0 or n > 8.
  2. When n = 8, the maximum points to encode is $2^8 = 256$ points.
  3. When X0 = OFF→ON, this instruction encodes the content in 2^3 bits (M0–M7) and stores in the lower 3-bit (b2–b0) of D0. The unused bits in D0 (b15–b3) become 0.
  4. After the execution is completed, X0 becomes OFF, and the data in D remains unchanged.

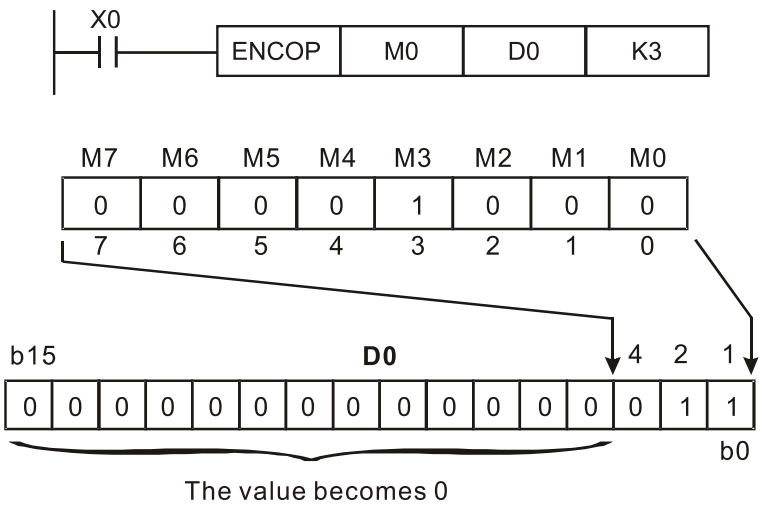

- Example 2
  1. When S is used as a word device, the valid range is $0 < n \leq 4$. Error occurs when n = 0 or n > 4.
  2. When n = 4, the points to encode can be $2^4 = 16$ points.
  3. When X0 = OFF→ON, this instruction encodes the content in 2^3 bits (b0–b7) of D10 and stores in the lower 3-bit (b2–b0) of D0. The unused bits in D20 (b15–b3) become 0. (b8–b15 in D10 are invalid data)

4. After the execution is completed, X0 becomes OFF, and the data in D remains unchanged.

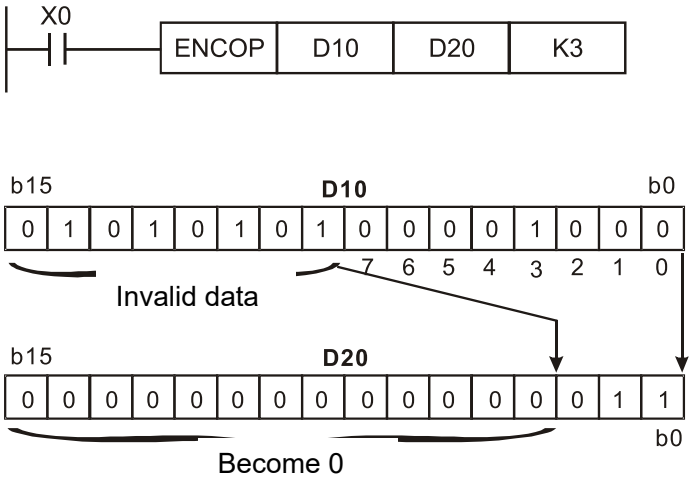

API	Instruction code			Operand	Function
43	D	**SUM**	P	S, D	Sum of active bits

Type / Operand	Bit devices			Word devices							
	X	Y	M	K	H	KnX	KnY	KnM	T	C	D
S				*	*	*	*	*	*	*	*
D									*	*	*

Caution for using operand: none

16-bit instruction (5 steps)

SUM	Continuous execution type	SUMP	Pulse execution type

32-bit instruction (9 steps)

DSUM	Continuous execution type	DSUMP	Pulse execution type

Associated flag: M1020

Description

- S: source device
  D: destination device for storing counted value
- The sum of all bits whose contents are "1" in S will be stored in D.
- When using 32-bit instruction, D occupies two registers.
- Operand S, D use device F, and they can only use 16-bit instructions.
- If there is no bit is ON, the flag signal M1020 will be ON.

Example

- When X0 = OFF→ON, the 16 bits (4 bits as a group) in D10 rotates to the left, as shown in the figure below. The bit marked with ※ is sent to carry flag M1022.
- When M200 = ON, the sum of whose contents are “1” in 16 bits of D0 will be stored in D2.

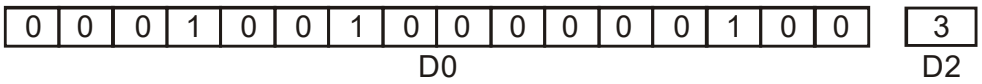

API	Instruction code			Operand	Function
44	D	**BON**	P	S, D, n	Check specified bit status

Operand \ Type	Bit devices			Word devices							
	X	Y	M	K	H	KnX	KnY	KnM	T	C	D
S				*	*	*	*	*	*	*	*
D		*	*						*	*	*
n				*	*				*	*	

Caution for using operand: none

16-bit instruction (7 steps)

BON	Continuous execution type	BONP	Pulse execution type

32-bit instruction (9 steps)

DBON	Continuous execution type	DBONP	Pulse execution type

Associated flag: none

Description

- S: source device
  D: device for storing check result
  n: bit number to be checked (numbered from 0)
- The instruction checks the status of designated bit (specified by n) in S and stores the result in D.
- Operand S uses device F, and they can only use 16-bit instructions.
- Valid range of operand n: n = 0–15 (16-bit), n = 0–31 (32-bit)

Example

- When X0 = ON, if the bit15 of D0 is “1”, then M0 = ON; if it’s “0”, then M0 = OFF.
- X0 becomes OFF, M0 remains in its previous status.

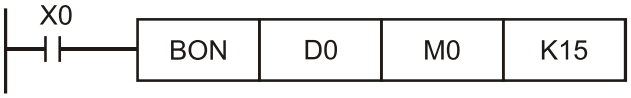

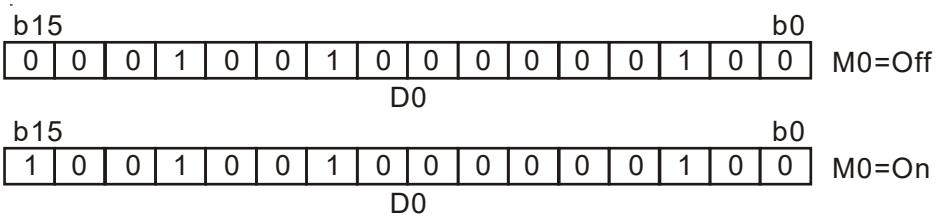

API	Instruction code			Operand	Function
49	D	**FLT**	P	S, D	BIN integer → binary floating-point number

Type / Operand	Bit devices			Word devices							
	X	Y	M	K	H	KnX	KnY	KnM	T	C	D
S									*	*	*
D									*	*	*

Caution for using operand:

- Operand D occupies 2 consecutive devices.
- See the specification of each model for the scope of device's usage.

16-bit instruction (5 steps)

FLT	Continuous execution type	FLTP	Pulse execution type

32-bit instruction (9 steps)

DFLT	Continuous execution type	DFLTP	Pulse execution type

Associated flag: none

Description

- S: source device for conversion
  D: device for storing the conversion result
- Convert BIN integer to binary floating-point number.

Example

- When M200 = ON, convert the BIN integers corresponding to D0 and D1 to floating-point numbers and put into D20 and D21.

API	Instruction code			Operand	Function
110	D	**ECMP**	P	S_1, S_2, D	Binary floating-point number comparison

Type / Operand	Bit devices			Word devices							
	X	Y	M	K	H	KnX	KnY	KnM	T	C	D
S_1				*	*						*
S_2				*	*						*
D											*

Caution for using operand:
- Operand D occupies 3 consecutive devices.
- See the specification of each model for the scope of device's usage.

16-bit instruction

-	-	-	-

32-bit instruction (13 steps)

DECMP	Continuous execution type	DECMPP	Pulse execution type

Associated flag: none

Description

- S_1: binary floating-point number comparison value 1
  S_2: binary floating-point number comparison value 2
  D: comparison result, occupies 3 consecutive devices
- The binary floating-point value 1 and 2 are compared with each other. The comparison result (>, =, <) is stored in D.
- If S_1 or S_2 is a designated constant K or H, the instruction will convert the constant into a binary floating-point value before the comparison.

Example

- Designate the device to be M10, and this automatically occupies M10 to M12.
- When X0 = ON, DECMP instruction is executed, and one of M10, M11, and M12 will be ON. When X0 = OFF, DECMP instruction is not executed, and M10, M11, and M12 remain their status before X0 = OFF.
- If you need to obtain a comparison result with ≥,≤, and ≠, make a serial-parallel connection between M10 –M12.
- To clear the comparison result, use RST or ZRST instruction.

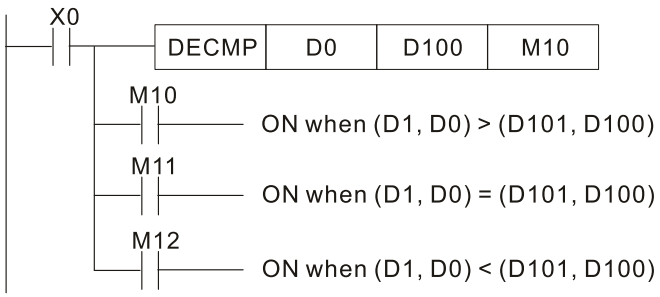

API	Instruction code			Operand	Function
111	D	**EZCP**	P	S_1, S_2, S, D	Binary floating-point number zone comparison

Type / Operand	Bit devices			Word devices							
	X	Y	M	K	H	KnX	KnY	KnM	T	C	D
S_1				*	*						*
S_2				*	*						*
S				*	*						*
D		*	*								

Caution for using operand:

- Operand D occupies 3 consecutive devices.
- See the specification of each model for the scope of device's usage.

16-bit instruction

-	-	-	-

32-bit instruction (17 steps)

DEZCP	Continuous execution type	DEZCPP	Pulse execution type

Associated flag: none

Description

- S_1: lower bound of binary floating-point in zone comparison
  S_2: upper bound of binary floating-point in zone comparison
  S: binary floating-point number comparison value
  D: comparison result, occupies 3 consecutive devices
- S is compared with S_1 and S_2, and the result is stored in D.
- If S_1 or S_2 is a designated constant K or H, the instruction will convert the constant into a binary floating-point value before the comparison.
- When $S_1 > S_2$, the instruction uses S_1 as upper / lower bound for comparison.

Example

- Designate the device to be M0, and this automatically occupies M0 to M2.
- When X0 = ON, DEZCP instruction is executed, and one of M0, M1, and M2 will be ON. When X0 = OFF, EZCP instruction is not executed, and M0, M1, and M2 remain their status before X0 = OFF.
- To clear the comparison result, use RST or ZRST instruction.

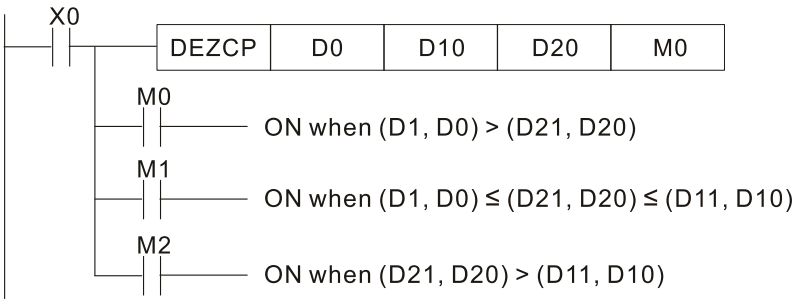

API	Instruction code			Operand	Function
116	D	**RAD**	P	S, D	Degree → Radian

Type / Operand	Bit devices			Word devices							
	X	Y	M	K	H	KnX	KnY	KnM	T	C	D
S				*	*						*
D											*

Caution for using operand:

- See the specification of each model for the scope of device's usage.

16-bit instruction

-	-	-	-

32-bit instruction (9 steps)

DRAD	Continuous execution type	DRADP	Pulse execution type

Associated flag: none

Description

- S: source of data (degree)
  D: result (radian)
- Use the following formula to convert degree to radian.
  Radian = Degree x (π / 180)

Example

- When X0 = ON, designate the degree of binary floating-point number (D1, D0). Convert the degree into radian and store the result in binary floating point in (D11, D10).

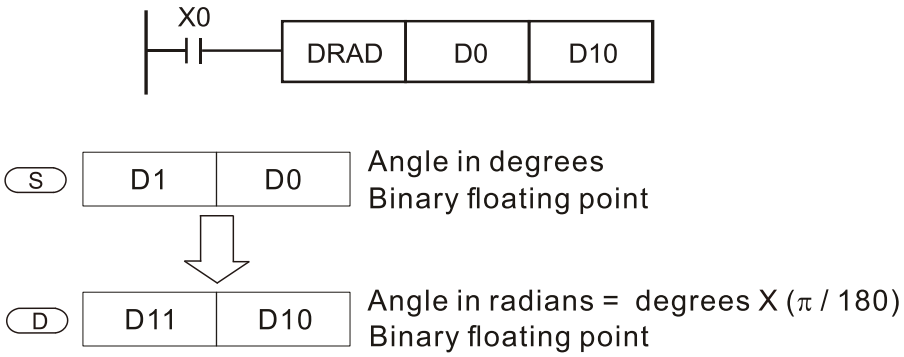

API	Instruction code			Operand	Function
117	D	**DEG**	P	S, D	Radian → Degree

Type / Operand	Bit devices			Word devices							
	X	Y	M	K	H	KnX	KnY	KnM	T	C	D
S				*	*						*
D											*

Caution for using operand:

- See the specification of each model for the scope of device's usage.

16-bit instruction

-	-	-	-

32-bit instruction (9 steps)

DDEG	Continuous execution type	DDEGP	Pulse execution type

Associated flag: none

Description

- S: source of data (radian)
  D: result (degree)
- Use the following formula to convert radian to degree.
  Degree = Radian x (π / 180)

Example

- When X0 = ON, designate the degree of binary floating-point number (D1, D0). Convert the radian into degree and store the result in binary floating point in (D11, D10).

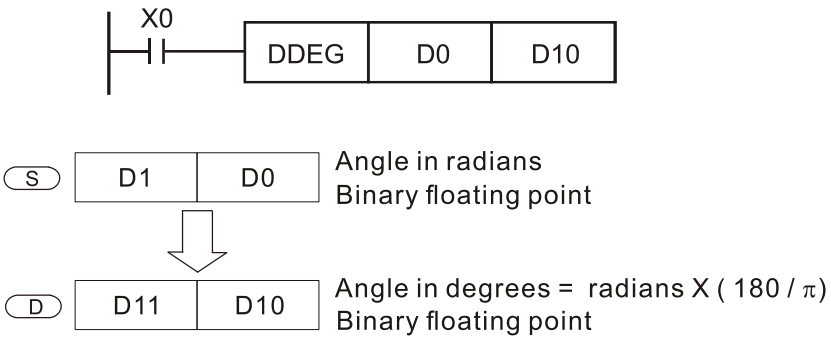

API	Instruction code			Operand	Function
120	D	**EADD**	P	S_1, S_2, D	Binary floating-point number addition

Type / Operand	Bit devices			Word devices							
	X	Y	M	K	H	KnX	KnY	KnM	T	C	D
S_1				*	*						*
S_2				*	*						*
D											*

Caution for using operand:
- See the specification of each model for the scope of device's usage.

16-bit instruction			
-	-	-	-

32-bit instruction (13 steps)			
DEADD	Continuous execution type	DEADDP	Pulse execution type

Associated flag: none

Description

- S_1: summand
  S_2: addend
  D: sum
- The content of the register that S_1 designates adds the content of the register that S_2 designates, and its sum is stored in the register that D designates. This addition is performed in the form of binary floating-point numbers.
- If S_1 or S_2 is an designated constant K or H, the instruction will convert the constant into a binary floating-point value before the addition.
- S_1 and S_2 can designate the same register. In this case, if the instruction is specified as "continuous execution type" instruction (pulse execution type DEADDP is generally used) and the drive contact is ON, the register will be added once in every scan.

Example

- Example 1
  When X0 = ON, the binary floating-point numbers (D1, D0) add the binary floating-point numbers (D3, D2), and stores the result in (D11, D10).

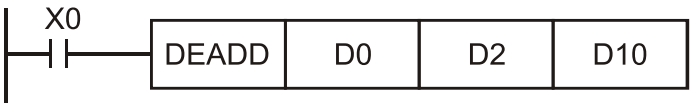

- Example 2
  When X2 = ON, the binary floating-point numbers (D11, D10) add K1234 (convert to binary floating-point number automatically), and stores the result in (D21, D20).

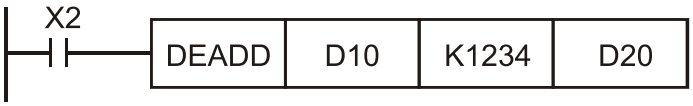

API	Instruction code			Operand	Function
121	D	**ESUB**	P	S_1, S_2, D	Binary floating-point number subtraction

Type / Operand	Bit devices			Word devices							
	X	Y	M	K	H	KnX	KnY	KnM	T	C	D
S_1				*	*						*
S_2				*	*						*
D											*

Caution for using operand:

- See the specification of each model for the scope of device's usage.

16-bit instruction			
-	-	-	-

32-bit instruction (13 steps)			
DESUB	Continuous execution type	DESUBP	Pulse execution type

Associated flag: none

Description

- S_1: minuend
  S_2: subtrahend
  D: difference
- Subtract the content of the register that S_2 designates from the content of the register that S_1 designates, and its difference is stored in the register that D designates. This subtraction is performed in the form of binary floating-point numbers.
- If S_1 or S_2 is a designated constant K or H, the instruction will convert the constant into a binary floating-point value before the subtraction.
- S_1 and S_2 can designate the same register. In this case, if the instruction is specified as "continuous execution type" instruction (pulse execution type DESUBP is generally used) and the drive contact is ON, the register will be subtracted once in every scan.

Example

- Example 1
  When X0 = ON, the binary floating-point numbers (D1, D0) subtract the binary floating-point numbers (D3, D2), and stores the result in (D11, D10).

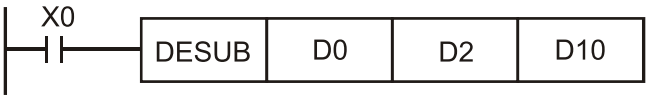

- Example 2
  When X2 = ON, subtract the binary floating-point numbers (D1, D0) from K1234 (convert to binary floating-point number automatically), and stores the result in (D11, D10).

API	Instruction code			Operand	Function
122	D	**EMUL**	P	S_1, S_2, D	Binary floating-point number multiplication

Type / Operand	Bit devices			Word devices							
	X	Y	M	K	H	KnX	KnY	KnM	T	C	D
S_1				*	*						*
S_2				*	*						*
D											*

Caution for using operand:
- See the specification of each model for the scope of device's usage.

16-bit instruction

-	-	-	-

32-bit instruction (13 steps)

DEMUL	Continuous execution type	DEMULP	Pulse execution type

Associated flag: none

Description

- S_1: Multiplicand
  S_2: Multiplicator
  D: Product
- The content of the register that S_1 designates multiplies the content of the register that S_2 designates, and its product is stored in the register that D designates. This multiplication is performed in the form of binary floating-point numbers.
- If S_1 or S_2 is a designated constant K or H, the instruction will convert the constant into a binary floating-point value before the multiplication.
- S_1 and S_2 can designate the same register. In this case, if the instruction is specified as "continuous execution type" instruction (pulse execution type DEMULP is generally used) and the drive contact is ON, the register will be multiplied once in every scan.

Example

- Example 1
  When X1 = ON, multiply the binary floating-point number (D1, D0) and (D11, D11), and store the product to the register that (D21, D20) designate.

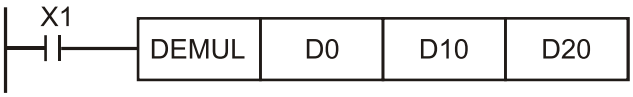

- Example 2
  When X2 = ON, multiply K1234 (convert to binary floating-point number automatically) and the binary floating-point numbers (D1, D0), and stores the result in (D11, D10).

API	Instruction code			Operand	Function
123	D	**EDIV**	P	S_1, S_2, D	Binary floating-point number division

Type / Operand	Bit devices			Word devices							
	X	Y	M	K	H	KnX	KnY	KnM	T	C	D
S_1				*	*						*
S_2				*	*						*
D											*

Caution for using operand:

- See the specification of each model for the scope of device's usage.

16-bit instruction

-	-	-	-

32-bit instruction (13 steps)

DEDIV	Continuous execution type	DEDIVP	Pulse execution type

Associated flag: none

Description

- S_1: Dividend
  S_2: Divisor
  D: Quotient and remainder
- The content of the register that S_1 designates divides by the content of the register that S_2 designates, and its quotient is stored in the register that D designates. This division is performed in the form of binary floating-point numbers.
- If S_1 or S_2 is a designated constant K or H, the instruction will convert the constant into a binary floating-point value before the division.

Example

- Example 1
  When X1 = ON, the binary floating-point number (D1, D0) divides by the binary floating-point number (D11, D10), and store the quotient to the register that (D21, D20) designate.

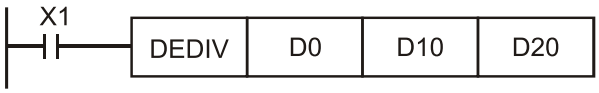

- Example 2
  When X2 = ON, the binary floating-point numbers (D1, D0) divides by K1234 (convert to binary floating-point number automatically), and stores the result in (D11, D10).

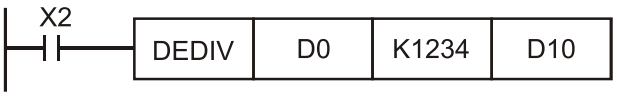

API	Instruction code			Operand	Function
124	D	**EXP**	P	S, D	Binary floating-point number exponentiation

Type / Operand	Bit devices			Word devices							
	X	Y	M	K	H	KnX	KnY	KnM	T	C	D
S				*	*						*
D											*

16-bit instruction			
-	-	-	-

32-bit instruction (9 steps)			
DEXP	Continuous execution type	DEXPP	Pulse execution type

Associated flag: none

Caution for using operand:

- See the specification of each model for the scope of device's usage.

Description

- S: device of operation source
  D: device of operation result
- e = 2.71828 is as a base number, and S is the exponent to do EXP operation.
  $[D + 1, D] = e^{[S+1, S]}$
- Both positive and negative values are valid for S. The 32-bit format must be used to designate register D. The operation is executed in floating-point numbers, so the value in S needs to be converted into floating-point number before exponent operation.
- The content of operand D = e^S, e =2.71828, and S is the designated source data.

Example

- When M0 = ON, convert (D0, D1) to be binary floating-point numbers and store in the register (D11, D10).
- When M1 = ON, (D11, D10) are the exponent to do EXP operation. Their value is binary floating-point numbers and store in the register (D21, D20).

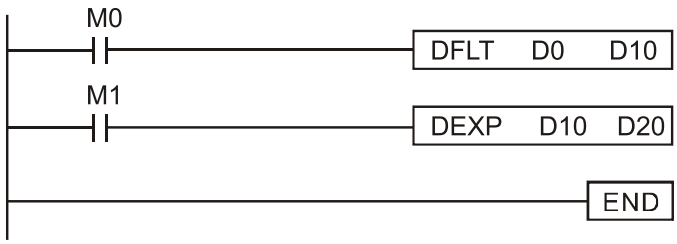

API	Instruction code			Operand	Function
125	D	**LN**	P	S, D	Binary floating-point number natural logarithm operation

Type / Operand	Bit devices			Word devices							
	X	Y	M	K	H	KnX	KnY	KnM	T	C	D
S				*	*						*
D											*

Caution for using operand:

- See the specification of each model for the scope of device's usage.

16-bit instruction

-	-	-	-

32-bit instruction (9 steps)

DLN	Continuous execution type	DLNP	Pulse execution type

Associated flag: none

Description

- S: device of operation source
  D: device of operation result
- e = 2.71828 is as a base number, and S is the exponent to do LN operation.
  $[D + 1, D] = \ln^{[S+1, S]}$
- Both positive and negative values are valid for S. The 32-bit format must be used to designate register D. The operation is executed in floating-point numbers, so the value in S needs to be converted into floating-point number before exponent operation.
- The content of operand D = $\ln_S = \log_e S$, e =2.71828, and S is the designated source data.

Example

- When M0 = ON, convert (D0, D1) to be binary floating-point numbers and store in the register (D11, D10).
- When M1 = ON, (D11, D10) are the exponent to do LN operation. Their value is binary floating-point numbers and store in the register (D21, D20).

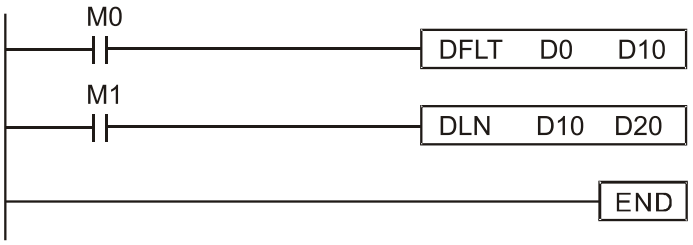

API	Instruction code			Operand	Function
127	D	**ESQR**	P	S, D	Binary floating-point number square root

Type / Operand	Bit devices			Word devices							
	X	Y	M	K	H	KnX	KnY	KnM	T	C	D
S				*	*						*
D											*

Caution for using operand:
- See the specification of each model for the scope of device's usage.

16-bit instruction

-	-	-	-

32-bit instruction (9 steps)

DESQR	Continuous execution type	DESQRP	Pulse execution type

Associated flag: none

Description

- S: the source device for calculating square root
  D: operation result
- Calculate square root of the content in register that S designates, the result will be stored in the register that D designates. The square root operation is performed in the form of binary floating-point numbers.
- If S is a designated constant K or H, the instruction will convert the constant into a binary floating-point value before the square root operation.

Example

- Example 1
  When X0 = ON, calculate the square root of the binary floating-point number (D1, D0), and store result to the register that (D11, D10) designate.

$\sqrt{(D1 \cdot D0)} \longrightarrow (D11 \cdot D10)$

Binary floating point → Binary floating point

- Example 2
  When X2 = ON, calculate the square root of K1234 (convert to binary floating-point number automatically), and stores the result in (D11, D10).

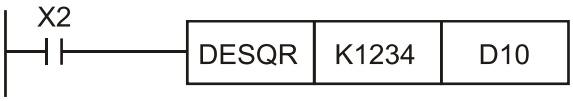

API	Instruction code			Operand	Function
129	D	**INT**	P	S, D	Binary floating-point number → BIN integer

Type / Operand	Bit devices			Word devices							
	X	Y	M	K	H	KnX	KnY	KnM	T	C	D
S											*
D											*

Caution for using operand:

- See the specification of each model for the scope of device's usage.

16-bit instruction (5 steps)

INT	Continuous execution type	INTP	Pulse execution type

32-bit instruction (9 steps)

DINT	Continuous execution type	DINTP	Pulse execution type

Associated flag: none

Description

- S: source device for conversion
  D: the conversion result
- The content in the register that S designates is converted from binary floating-point form to BIN integer, and store them to the register that D designates. The decimal of the operation result will be left out.
- This instruction is the opposite of the API 49 (FLT) instruction.

Example

- When X0 = ON, convert the binary floating-point numbers (D1, D0) to BIN integer, and store the result to (D10). The decimal of the operation result will be left out.

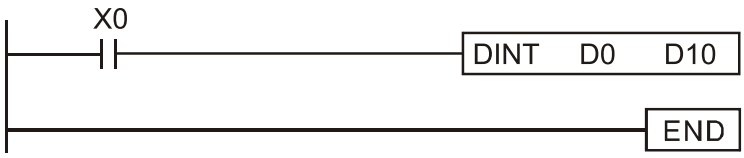

API	Instruction code			Operand	Function
130	D	**SIN**	P	S, D	Binary floating-point number sine operation

Type / Operand	Bit devices			Word devices							
	X	Y	M	K	H	KnX	KnY	KnM	T	C	D
S				*	*						*
D											*

Caution for using operand:

- See the specification of each model for the scope of device's usage.

16-bit instruction

-	-	-	-

32-bit instruction (9 steps)

DSIN	Continuous execution type	DSINP	Pulse execution type

Associated flag: none

Description

- S: source value
  D: operation result of sine
- The source designated by S is radian.
- RAD value = degree x π / 180
- Find sine value from the source value designated by S, and store in the register that D designates.
  See the figure below for the relation between the radian and the operation result:

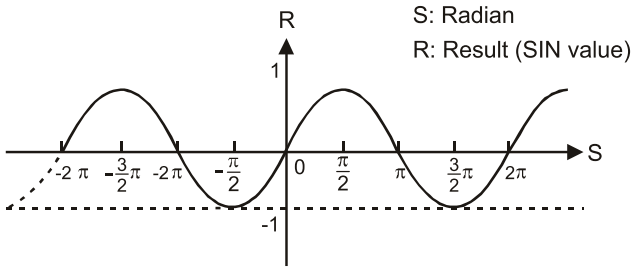

Example

- When X0 = ON, designate the RAD value of the binary floating-point number (D1, D0) to find the sine value and stores in (D11, D10). The content is binary floating-point number.

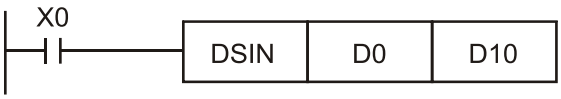

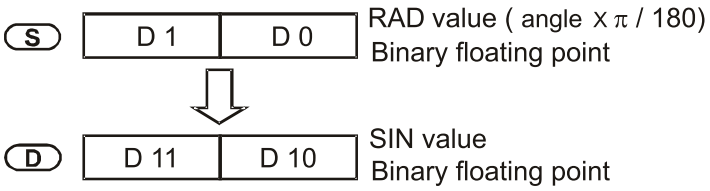

API	Instruction code			Operand	Function
131	D	**COS**	P	S, D	Binary floating-point number cosine operation

Type / Operand	Bit devices			Word devices							
	X	Y	M	K	H	KnX	KnY	KnM	T	C	D
S				*	*						*
D											*

Caution for using operand:

- See the specification of each model for the scope of device's usage.

16-bit instruction

-	-	-	-

32-bit instruction (9 steps)

DCOS	Continuous execution type	DCOSP	Pulse execution type

Associated flag: none

Description

- S: source value
  D: operation result of cosine
- The source value designated by S can be set as radian or degree, and this is decided by flag M1018.
- M1018 = OFF, radian mode, RAD value = degree x π / 180
- M1018 = ON, degree mode, range: 0° ≤ degree < 360°
- If the operation result is 0, M1020 = ON
- Find cosine value from the source value designated by S, and store in the register that D designates.

  See the figure below for the relation between the radian and the operation result:

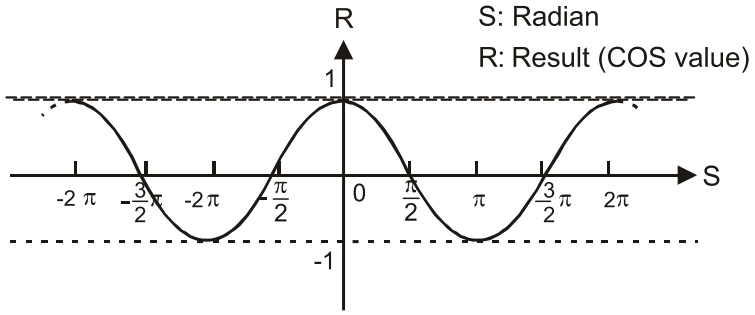

Example

- When X0 = ON, designate the RAD value of the binary floating-point number (D1, D0) to find the sine value and stores in (D11, D10). The content is binary floating-point number.

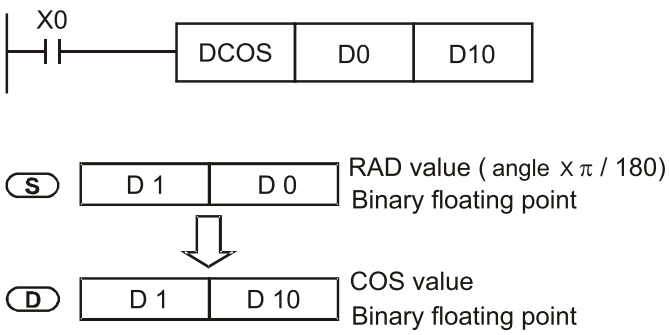

API	Instruction code			Operand	Function
132	D	**TAN**	P	S, D	Binary floating-point number tangent operation

Type / Operand	Bit devices			Word devices							
	X	Y	M	K	H	KnX	KnY	KnM	T	C	D
S				*	*						*
D											*

Caution for using operand:
- See the specification of each model for the scope of device's usage.

16-bit instruction

-	-	-	-

32-bit instruction (9 steps)

DTAN	Continuous execution type	DTANP	Pulse execution type

Associated flag: none

Description

- S: source value
  D: operation result of tangent
- The source value designated by S can be set as radian or degree, and this is decided by flag M1018.
- M1018 = OFF, radian mode, RAD value = degree x π / 180
- M1018 = ON, degree mode, range: 0° ≤ degree < 360°
- If the operation result is 0, M1020 = ON
- Find tangent value from the source value designated by S, and store in the register that D designates.
  See the figure below for the relation between the radian and the operation result:

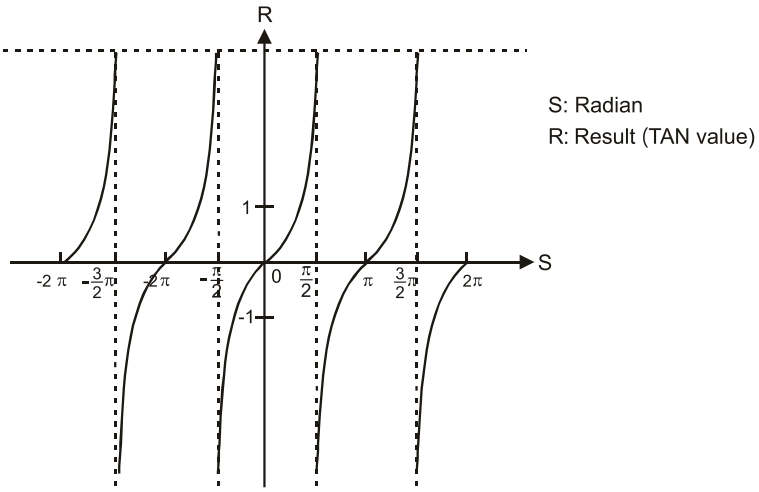

Example

- When X0 = ON, designate the RAD value of the binary floating-point number (D1, D0) to find the tangent value and stores in (D11, D10). The content is binary floating-point number.

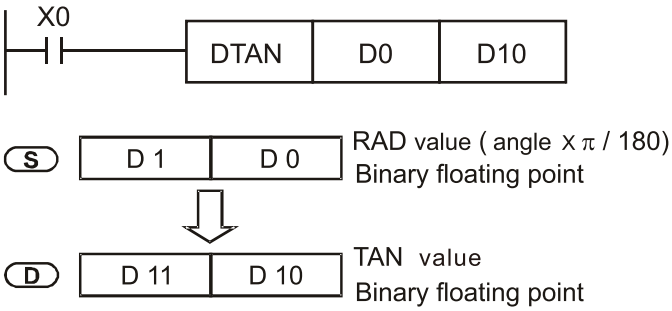

API	Instruction code			Operand	Function
133	D	**ASIN**	P	S, D	Binary floating-point number arcsine operation

Type / Operand	Bit devices			Word devices							
	X	Y	M	K	H	KnX	KnY	KnM	T	C	D
S				*	*						*
D											*

Caution for using operand:

- See the specification of each model for the scope of device's usage.

16-bit instruction

-	-	-	-

32-bit instruction (9 steps)

DASIN	Continuous execution type	DASINP	Pulse execution type

Associated flag: none

Description

- S: source value (binary floating-point number)
  D: operation result of arcsine
- ASIN value = $\sin^{-1}$
  See the figure below for the relation between the input value and the operation result:

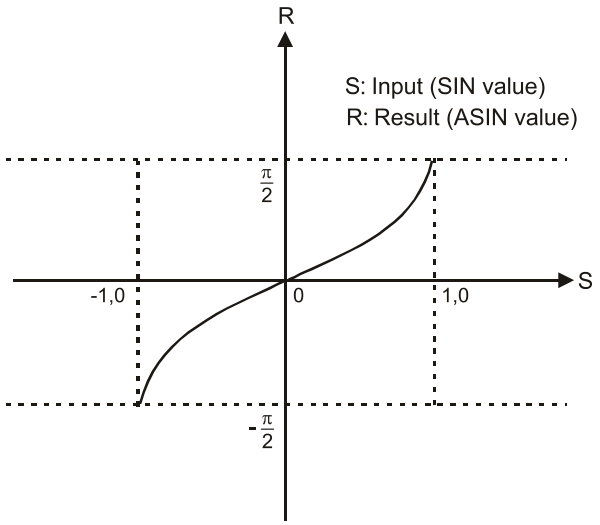

Example

- When X0 = ON, designate the binary floating-point number (D1, D0) to find the arcsine value and stores in (D11, D10). The content is binary floating-point number.

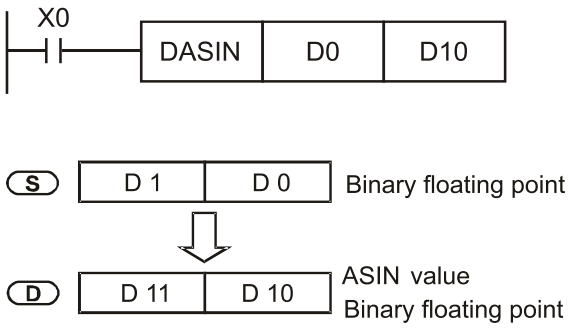

API	Instruction code			Operand	Function
134	D	**ACOS**	P	S, D	Binary floating-point number arccosine operation

Type / Operand	Bit devices			Word devices							
	X	Y	M	K	H	KnX	KnY	KnM	T	C	D
S				*	*						*
D											*

Caution for using operand:
- See the specification of each model for the scope of device's usage.

16-bit instruction

-	-	-	-

32-bit instruction (9 steps)

DACOS	Continuous execution type	DACOSP	Pulse execution type

Associated flag: none

Description

- S: source value (binary floating-point number)
  D: operation result of arccosine
- ACOS value = $\cos^{-1}$
  See the figure below for the relation between the input value and the operation result:

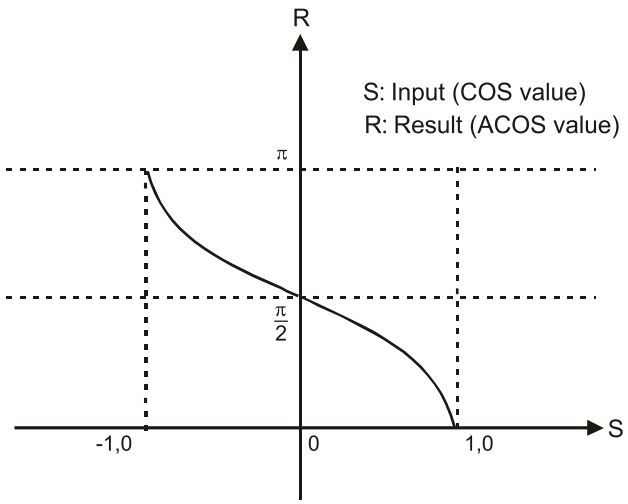

Example

- When X0 = ON, designate the binary floating-point number (D1, D0) to find the arccosine value and stores in (D11, D10). The content is binary floating-point number.

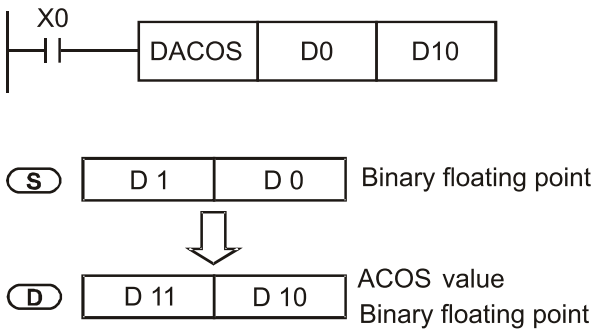

API	Instruction code			Operand	Function
135	D	**ATAN**	P	S, D	Binary floating-point number arctangent operation

Type / Operand	Bit devices			Word devices							
	X	Y	M	K	H	KnX	KnY	KnM	T	C	D
S				*	*						*
D											*

Caution for using operand:

- See the specification of each model for the scope of device's usage.

16-bit instruction

-	-	-	-

32-bit instruction (9 steps)

DATAN	Continuous execution type	DATANP	Pulse execution type

Associated flag: none

Description

- S: source value (binary floating-point number)
  D: operation result of arctangent
- ATAN value = $\tan^{-1}$
  See the figure below for the relation between the input value and the operation result:

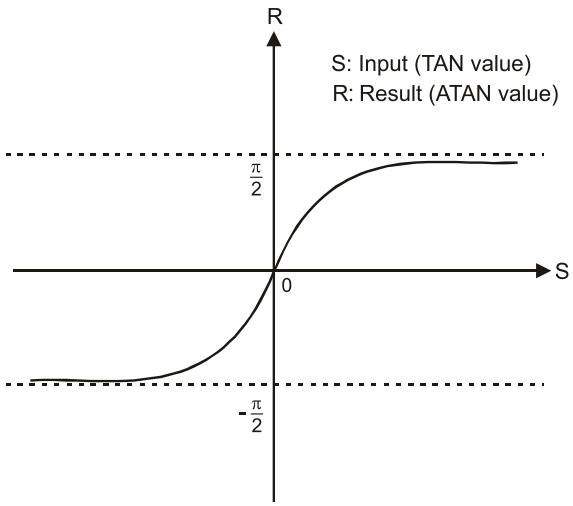

Example

- When X0 = ON, designate the binary floating-point number (D1, D0) to find the arctangent value and stores in (D11, D10). The content is binary floating-point number.

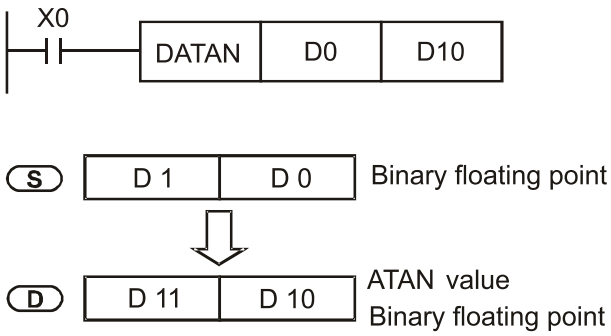

API	Instruction code			Operand	Function
136	D	**SINH**	P	S, D	Binary floating-point number hyperbolic sine operation

Operand \ Type	Bit devices			Word devices							
	X	Y	M	K	H	KnX	KnY	KnM	T	C	D
S				*	*						*
D											*

Caution for using operand:

- See the specification of each model for the scope of device's usage.

16-bit instruction

-	-	-	-

32-bit instruction (9 steps)

DSINH	Continuous execution type	DSINHP	Pulse execution type

Associated flag: none

Description

- S: source value (binary floating-point number)
  D: operation result of hyperbolic sine
- sinh value = $(e^{s}-e^{-s}) / 2$

Example

- When X0 = ON, designate the binary floating-point number (D1, D0) to find the hyperbolic sine value and stores in (D11, D10). The content is binary floating-point number.

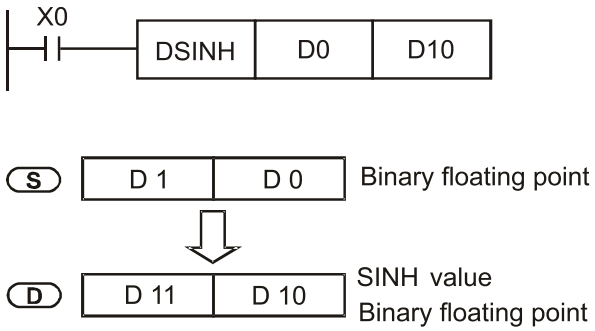

API	Instruction code			Operand	Function
137	D	**COSH**	P	S, D	Binary floating-point number hyperbolic cosine operation

Type / Operand	Bit devices			Word devices							
	X	Y	M	K	H	KnX	KnY	KnM	T	C	D
S				*	*						*
D											*

Caution for using operand:

- See the specification of each model for the scope of device's usage.

16-bit instruction

-	-	-	-

32-bit instruction (9 steps)

DCOSH	Continuous execution type	DCOSHP	Pulse execution type

Associated flag: none

Description

- S: source value (binary floating-point number)
  D: operation result of hyperbolic cosine
- COSH value = $(e^{s} + e^{-s}) / 2$

Example

- When X0 = ON, designate the binary floating-point number (D1, D0) to find the hyperbolic cosine value and stores in (D11, D10). The content is binary floating-point number.

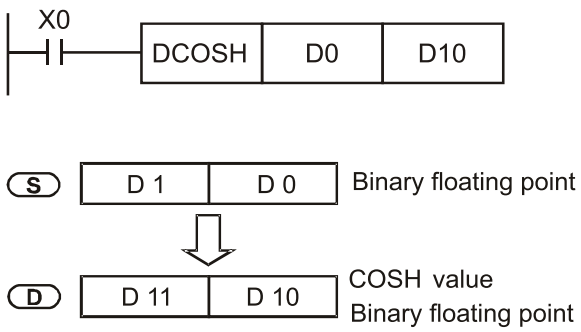

API	Instruction code			Operand	Function
138	D	**TANH**	P	S, D	Binary floating-point number hyperbolic tangent operation

Type / Operand	Bit devices			Word devices							
	X	Y	M	K	H	KnX	KnY	KnM	T	C	D
S				*	*						*
D											*

Caution for using operand:

- See the specification of each model for the scope of device's usage.

16-bit instruction

-	-	-	-

32-bit instruction (9 steps)

DTANH	Continuous execution type	DTANHP	Pulse execution type

Associated flag: none

Description

- S: source value (binary floating-point number)
  D: operation result of hyperbolic tangent
- tanh value= $(e^{s} - e^{-s}) / (e^{s} + e^{-s})$

Example

- When X0 = ON, designate the binary floating-point number (D1, D0) to find the hyperbolic tangent value and stores in (D11, D10). The content is binary floating-point number.

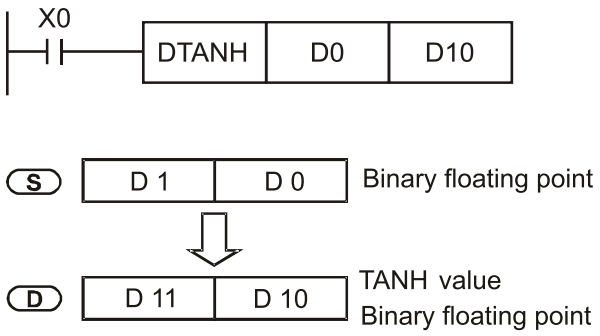

API	Instruction code			Operand	Function
147	D	**SWAP**	P	S	Exchange the up / down 8 bits

Type / Operand	Bit devices			Word devices							
	X	Y	M	K	H	KnX	KnY	KnM	T	C	D
S						*	*	*	*	*	*

Caution for using operand:

- See the specification of each model for the scope of device's usage.

16-bit instruction (3 steps)

SWAP	Continuous execution type	SWAPP	Pulse execution type

32-bit instruction (5 steps)

DSWAP	Continuous execution type	DSWAPP	Pulse execution type

Associated flag: none

Description

- S: a device to perform exchange of its up / down 8 bits.
- When using 16-bit instruction, the content of the upper 8-bit and lower 8-bit will exchange.
- When using 32-bit instruction, the content of the upper 8-bit and lower 8-bit in these two registers will exchange.
- This instruction generally adopts pulse execution instructions (SWAPP, DSWAPP).

API	Instruction code	Operand	Function
150	**MODRW**	S_1, S_2, S_3, S, n	Read / write Modbus data

Operand \ Type	Bit devices			Word devices							
	X	Y	M	K	H	KnX	KnY	KnM	T	C	D
S_1				*	*						*
S_2				*	*						*
S_3				*	*						*
S											*
n				*	*						*

16-bit instruction (11 steps)			
MODRW	Continuous execution type	MODRWP	Pulse execution type

32-bit instruction			
-	-	-	-

Caution for using operand: none

Associated flag: M1077, M1078, M1079

Description

- S_1: address of communication device
  S_2: function code
  S_3: device address of data to be read / written
  S: register for storing read / written data
  n: length of read / written data
- Before using this instruction, COM1 must be defined as being controlled by PLC (set Pr.09-31 = -12). After that, set the corresponding communication speed and format (Pr.09-01 and Pr.09-04). For function code (S_2), only these function codes listed below are available currently, others are still not executable.

Function	Description
H02	Read input
H03	Read word
H06	Write single word
H0F	Write multiple coil
H10	Write single word

- After executing the instruction, M1077, M1078, and M1079 become 0 immediately.
- For example, if you want the PLC master of the drive to control another drive slave and PLC slave, assume the station number of drive slave is 10, and the one of PLC slave is 20. See explanation below:
  The drive to control slave devices

No.	Example	MODRW instruction				
		S_1	S_2	S_3	S	n
		Station number	Function code	Address	Register	Length
1	Read the parameters Pr.01-00–Pr.01-03 of drive slave, 4 records in total. And store the data to D0–D3.	K10	H3	H100	D0	K4
2	Read the address H2100–H2102 of drive slave, 3 records in total. And store the data to D5–D7.	K10	H3	H2100	D5	K3
3	Write the parameters Pr.05-00–Pr.05-03 of drive slave, 3 records in total. And the written values are D10, D11, and D12.	K10	H10	H500	D10	K3

4	Write the address H2000–H2001of drive slave, 2 records in total. And the written values are D15 and D16.	K10	H10	H2000	D15	K2

The PLC to control slave devices

No.	Example	MODRW instruction				
		S_1	S_2	S_3	S	n
		Station number	Function code	Address	Register	Length
1	Read X0–X3 status of PLC slave, 4 records in total. And store the read data in bit0–bit3 of D0.	K20	H2	H400	D0	K4
2	Read Y0–Y3 status of PLC slave, 4 records in total. And store the read data in bit0–bit3 of D1.	K20	H2	H500	D1	K4
3	Read M0–M3 status of PLC slave, 4 records in total. And store the read data in bit0–bit3 of D2.	K20	H2	H800	D2	K4
4	Read T0–T3 status of PLC slave, 4 records in total. And store the read data in bit0–bit3 of D3.	K20	H2	H600	D3	K4
5	Read C0–C3 status of PLC slave, 4 records in total. And store the read data in bit0–bit3 of D4.	K20	H2	HE00	D4	K4
6	Read T0–T3 count values of PLC slave, 4 records in total. And store the read data in D10–D13.	K20	H3	H600	D10	K4
7	Read C0–C3 count values of PLC slave, 4 records in total. And store the read data in D20–D23.	K20	H3	HE00	D20	K4
8	Read D0–D3 count values of PLC slave, 4 records in total. And store the read data in D30–D33.	K20	H3	H1000	D30	K4
9	Write Y0–Y3 status of PLC slave, 4 records in total. And the written values are bit0–bit3 of D1.	K20	HF	H500	D1	K4
10	Write M0–M3 status of PLC slave, 4 records in total. And the written data are bit0–bit3 of D2.	K20	HF	H800	D2	K4
11	Write T0–T3 status of PLC slave, 4 records in total. And the written data are bit0–bit3 of D3.	K20	HF	H600	D3	K4
12	Write C0–C3 status of PLC slave, 4 records in total. And the written data are bit0–bit3 of D4.	K20	HF	HE00	D4	K4
13	Write T0–T3 count values of PLC slave, 4 records in total. And the written data are D10–D13.	K20	H10	H600	D10	K4
14	Write C0–C3 count values of PLC slave, 4 records in total. And the written data are D20–D23.	K20	H10	HE00	D20	K4
15	Write D0–D3 count values of PLC slave, 4 records in total. And the written data are D30–D33.	K20	H10	H1000	D30	K4

Example

- PLC triggers M0 to be ON when it starts, and sends the instruction to execute one MODRW.
- After receiving a response from the slave device, if the instruction is correct, then ROL is executed once, and M1 becomes ON.
- After receiving a response from the slave device, delays 10 PLC scan cycles, trigger M50 = 1, and then MODRW is executed once again.
- After receiving a response from the slave device again, if the instruction is correct, then ROL is executed once, and M2 becomes ON (M2 can be defined as repeat M), K4M0 becomes K1 again, that is, only M0 is 1, and the instructions can be sent cyclically. If you want to add instructions to be sent, you just have to add instructions in the dotted line box, and replace the M of repeat M to be Mn+1.

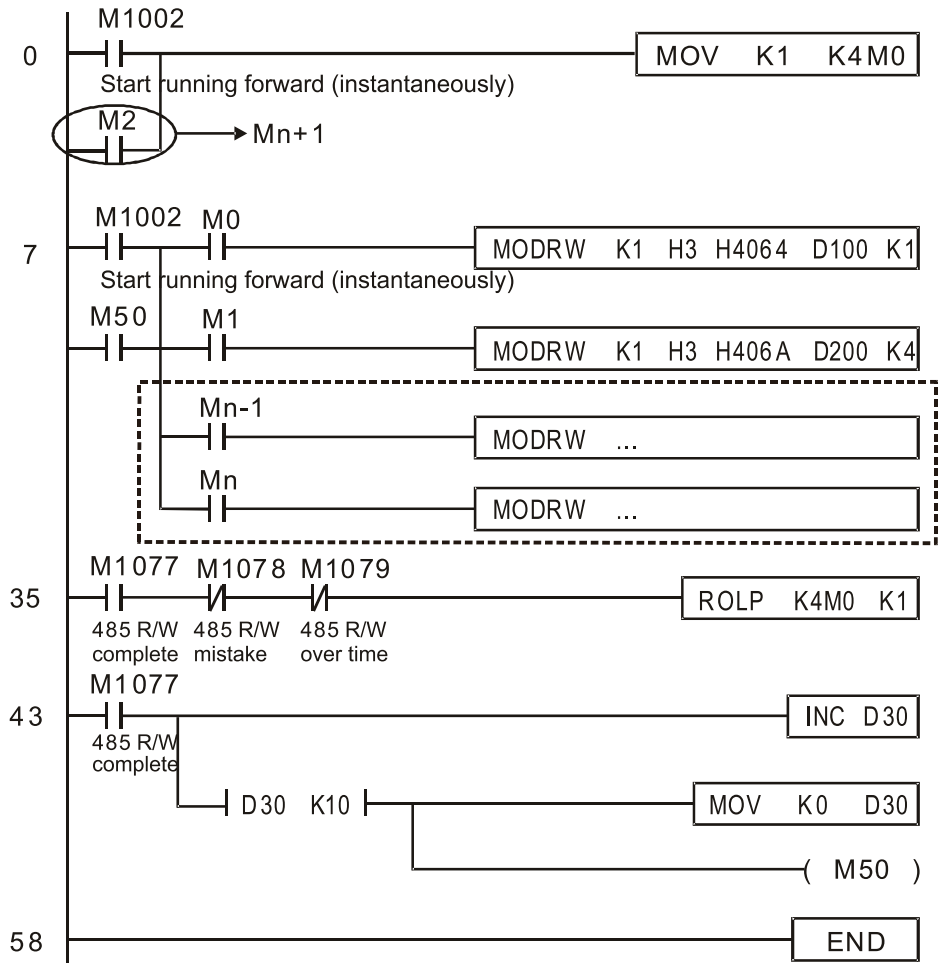

API	Instruction code	Operand	Function
160	**TCMP** P	S_1, S_2, S_3, S, D	Time comparison

Operand \ Type	Bit devices			Word devices							
	X	Y	M	K	H	KnX	KnY	KnM	T	C	D
S_1				*	*	*	*	*	*	*	*
S_2				*	*	*	*	*	*	*	*
S_3				*	*	*	*	*	*	*	*
S									*	*	*
D		*	*								

Caution for using operand:
- See the specification of each model for the scope of device's usage.

16-bit instruction (11 steps)			
TCMP	Continuous execution type	TCMPP	Pulse execution type

32-bit instruction			
-	-	-	-

Associated flag: none

Description

- S_1: hour setting for time comparison, setting range: K0–K23
  S_2: minute setting for time comparison, setting range: K0–K59
  S_3: second setting for time comparison, setting range: K0–K59
  S: current time of RTC
  D: comparison result
- Compare the setting value of S_1, S_2, S_3 and the current value of start of S, and the comparison result is stored in D.
- S is the "hour" of the current time (K0–K23) in RTC. S+1 is the "minute" of the current time (K0–K59) in RTC. S+2 is the "second" of the current time (K0–K59) in RTC.
- Usually the current time of RTC that S designates is read by using TRD instruction and then doing comparison by TCMP instruction. If S value exceeds the available range, it's operation error, so the instruction is not executed, M1068 = ON.

Example

- When X10 = ON, the instruction is executed to compare the current time of RTC D20–D22 and the setting value 12:20:45. The comparison result is stored in M10–M12. When X10 goes from ON→OFF, the instruction is not executed, but the previous ON / OFF statuses of M10–M12 remain.

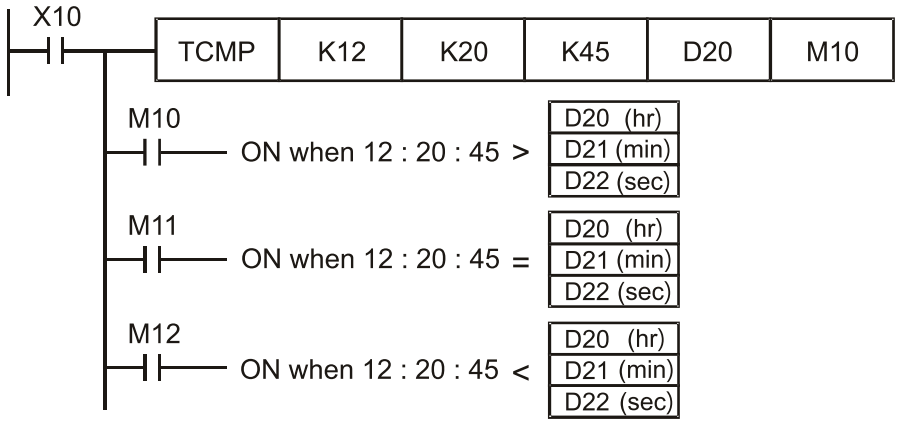

API	Instruction code			Operand	Function
161		**TZCP**	P	S_1, S_2, S, D	Time zone comparison

Type / Operand	Bit devices			Word devices							
	X	Y	M	K	H	KnX	KnY	KnM	T	C	D
S_1									*	*	*
S_2									*	*	*
S									*	*	*
D		*	*								

Caution for using operand:

- See the specification of each model for the scope of device's usage.

16-bit instruction (9 steps)

TZCP	Continuous execution type	TZCPP	Pulse execution type

32-bit instruction

-	-	-	-

Associated flag: none

Description

- S_1: the lower bound setting value for time comparison
  S_2: the upper bound setting value for time comparison
  S: current time of RTC
  D: comparison result
- Compare the current time of RTC that S designates with S1–S2, the comparison result is stored in D.
- S_1, S_1 + 1, S_1 + 2: the hour, minute, second of the lower bound setting value for comparison.
- S_2, S_2 + 1, S_2 + 2: the hour, minute, second of the upper bound setting value for comparison.
- S, S + 1, S + 2: the hour, minute, second of the current time of RTC.
- D0 that S designates is usually read the current time of RTC by using TRD instruction and then doing comparison by TZCP instruction. If S_1, S_2 and S value exceed the available range, it's operation error so the instruction is not executed, M1068 = ON.
- If S < S_1 and S < S_2, then D = ON; if S > S_1 and S < S_2, then D+2 = ON. For other conditions are D+1 = ON

Example

- When X10 = ON, TZCP instruction is executed, and one of M10, M11, and Y2 will be ON. When X10 = OFF, TZCP instruction is not executed, and M10, M11, and M12 remain their statuses before X10 = OFF.

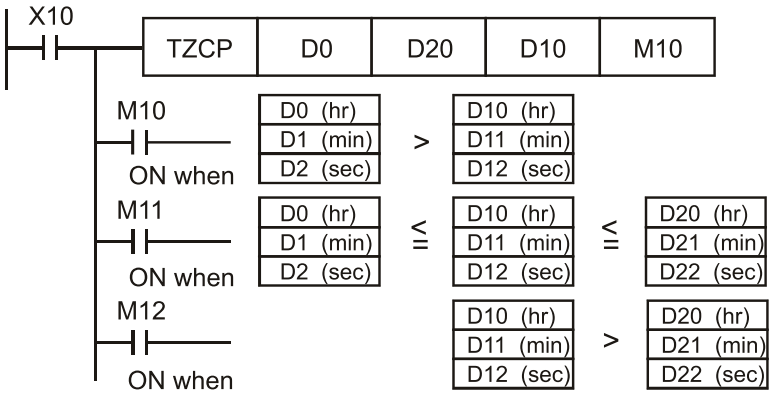

API	Instruction code	Operand	Function
162	**TADD** P	S_1, S_2, D	Real-time data addition

Operand \ Type	Bit devices			Word devices							
	X	Y	M	K	H	KnX	KnY	KnM	T	C	D
S_1									*	*	*
S_2									*	*	*
D									*	*	*

Caution for using operand:

- See the specification of each model for the scope of device's usage.

16-bit instruction (7 steps)

TADD	Continuous execution type	TADDP	Pulse execution type

32-bit instruction

-	-	-	-

Associated flag:

M1020: Zero flag
M1022: Carry flag
M1068 RTC error

Description

- S_1: time augend
  S_2: time addend
  D: time sum
- Add the hour, minute, second that S_1 designates and the hour, minute, second that S_2 designates, the result is stored in the hour, minuet, second of the register that D designates.
- If S_1, S_2 exceed the range, it's operation error, so the instruction is not executed. M1067, M1068 = ON, and record fault code 0E1A (HEX) in D1067.
- If the sum ≥ 24 hours, carry flag M1022 = ON, and the result in D is the value of the sum minus 24 hours.
- If the sum equals to 0 (00:00:00), zero flag M1020 = ON.

Example

- When X10 = ON, TADD instruction is executed. The hour, minute, second that D0–D2 designate plus the hour, minute, second that D10–D12 designates, the result is stored in the hour, minuet, second of the register that D20–D22 designates.

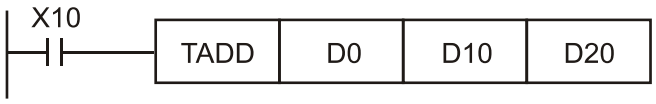

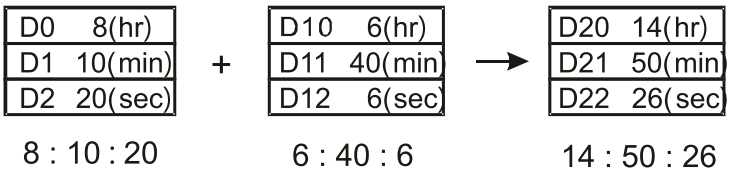

API	Instruction code	Operand	Function
163	**TSUB** P	S_1, S_2, D	Real-time data subtraction

Operand \ Type	Bit devices			Word devices							
	X	Y	M	K	H	KnX	KnY	KnM	T	C	D
S_1									*	*	*
S_2									*	*	*
D									*	*	*

Caution for using operand:

- See the specification of each model for the scope of device's usage.

16-bit instruction (7 steps)

TSUB	Continuous execution type	TSUBP	Pulse execution type

32-bit instruction

-	-	-	-

Associated flag:

M1020: Zero flag
M1022: Carry flag
M1068 RTC error

Description

- S_1: time minuend
  S_2: time subtrahend
  D: time difference
- Add the hour, minute, second that S_1 designates and the hour, minute, second that S_2 designates, the result is stored in the hour, minuet, second of the register that D designates.
- If S_1, S_2 exceed the range, it's operation error, so the instruction is not executed. M1067, M1068 = ON, and record fault code 0E1A (HEX) in D1067.
- If the difference is a negative, borrow flag M1021 = ON, and the result of the negative number plus 24 hours will be displayed in the register D designates.
- If the difference equals to 0 (00:00:00), zero flag M1020 = ON.

Example

- When X10 = ON, TSUB instruction is executed. The hour, minute, second that D0–D2 designate minus the hour, minute, second that D10–D12 designates, the result is stored in the register that D20–D22 designates.

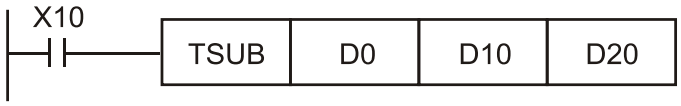

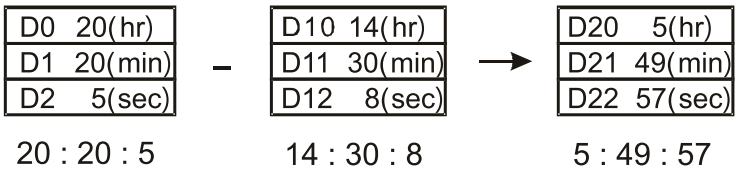

API	Instruction code	Operand	Function
166	**TRD** P	D	Read real-time data

Type / Operand	Bit devices			Word devices							
	X	Y	M	K	H	KnX	KnY	KnM	T	C	D
D									*	*	*

Caution for using operand:

- See the specification of each model for the scope of device's usage.

16-bit instruction (3 steps)

TRD	Continuous execution type	TRDP	Pulse execution type

32-bit instruction

-	-	-	-

Associated flag: none

Description

- S: the device for storing the current time read in RTC
- The RTC offers year, week, month, day, hour, minute, second, a total of 7 sets of data to store in D1063–D1069. The function of TRD instruction allows programmers to read the current time of RTC and store in the designated 7 registers.
- D1063 only stores the last 2 digits of the A.D. year.

Example

- When X0 = ON, read the current time of RTC and store in D0–D6 registers.
- The content of D1064, 1 = Monday, 2 = Tuesday ... 7 = Sunday

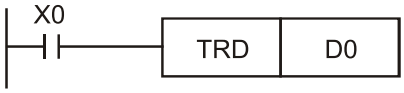

Special D	Item	Content		General D	Item
D1063	Year (A.D.)	00–99	→	D0	Year (A.D.)
D1064	Week	1–7	→	D1	Week
D1065	Month	1–12	→	D2	Month
D1066	Day	1–31	→	D3	Day
D1067	Hour	0–23	→	D4	Hour
D1068	Minute	0–59	→	D5	Minute
D1069	Second	0–59	→	D6	Second

API	Instruction code			Operand	Function
170	D	**GRY**	P	S, D	Binary code → Gray code

Operand \ Type	Bit devices			Word devices							
	X	Y	M	K	H	KnX	KnY	KnM	T	C	D
S				*	*	*	*	*	*	*	*
D							*	*	*	*	*

Caution for using operand:

- See the specification of each model for the scope of device's usage.

16-bit instruction (5 steps)

GRY	Continuous execution type	GRYP	Pulse execution type

32-bit instruction (9 steps)

DGRY	Continuous execution type	DGRYP	Pulse execution type

Associated flag: none

Description

- S: source device
  D: device for storing Gray code
- Convert the binary value of the device designated by S to Gray code, and store in the device that D designates.
- The available range of S is as shown below. If the value exceeds the range, it's operation error, and the instruction is not executed.
  16-bit instruction: 0–32,767
  32-bit instruction: 0–2,147,483,647

Example

- When X0 = ON, convert the constant K6513 to Gray code, and store in D0.

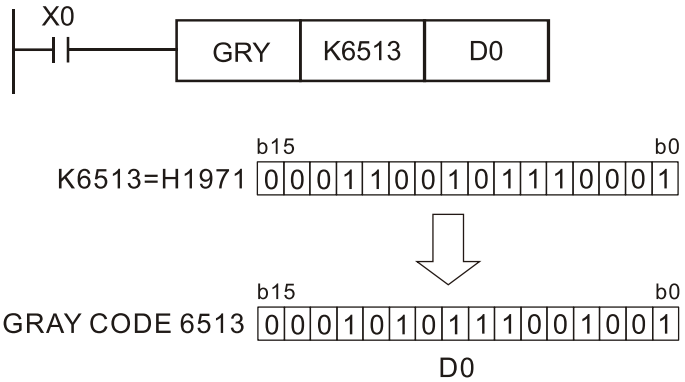

API	Instruction code			Operand	Function
171	D	**GBIN**	P	S, D	Gray code → Binary code

Type / Operand	Bit devices			Word devices							
	X	Y	M	K	H	KnX	KnY	KnM	T	C	D
S				*	*	*	*	*	*	*	*
D							*	*	*	*	*

Caution for using operand:

- See the specification of each model for the scope of device's usage.

16-bit instruction (5 steps)

GBIN	Continuous execution type	GBINP	Pulse execution type

32-bit instruction (9 steps)

DGBIN	Continuous execution type	DGBINP	Pulse execution type

Associated flag: none

Description

- S: source device for storing Gray code
  D: device for storing the binary value
- Convert the content (Gray code) of the device designated by S to binary value, and store in the device that D designates.
- This instruction is to convert the content of the absolute position type encoder (the output value is generally Gray code) which connects with input side of PLC to be binary value, and store in the designated register.
- The available range of S is as shown below. If the value exceeds the range, it's operation error, and the instruction is not executed.
  16-bit instruction: 0–32,767
  32-bit instruction: 0–2,147,483,647

Example

- When X20 = ON, convert the Gray code from the absolute position encoder which connects with X0–X17 input side to be binary value, and store in D10.

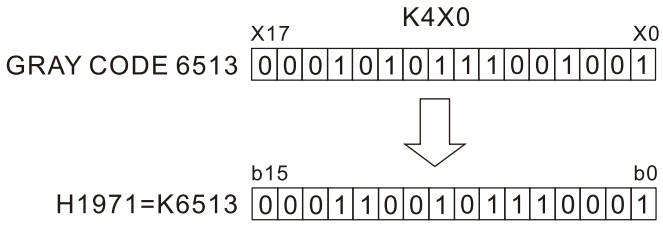

API	Instruction code			Operand	Function
215–217	D	**LD#**		S_1, S_2	Contact type logical operation LD#

Type / Operand	Bit devices			Word devices							
	X	Y	M	K	H	KnX	KnY	KnM	T	C	D
S_1				*	*	*	*	*	*	*	*
S_2				*	*	*	*	*	*	*	*

Caution for using operand: # : & | ^

- See the specification of each model for the scope of device's usage.

16-bit instruction (5 steps)

LD#	Continuous execution type	-	-

32-bit instruction (9 steps)

DLD#	Continuous execution type	-	-

Associated flag: none

Description

- S_1: source device 1
  S_2: source device 2
- This instruction is to compare S_1 and S_2, if the result ≠ 0, the continuity of the instruction is enabled; if the result = 0, the continuity of the instruction is disabled.
- LD# (#: &, |, ^) instruction is used for direct connection with busbar

API No.	16-bit instruction	32-bit instruction	Continuity condition	Discontinuity condition
215	LD&	**D**LD&	S_1 & S_2 ≠0	S_1 & S_2 =0
216	LD|	**D**LD|	S_1 | S_2 ≠0	S_1 | S_2 =0
217	LD^	**D**LD^	S_1 ^ S_2 ≠0	S_1 ^ S_2 =0

- &: logical operation with AND operator
- |: Logical operation with OR operator
- ^: Logical operation with XOR operator

Example

- C1 and C10 perform "AND" logical operation, if the result is not 0, Y10 = ON
- D200 and D300 perform "OR" logical operation, if the result is not 0 and X1 = ON, then Y11 = ON and hold.

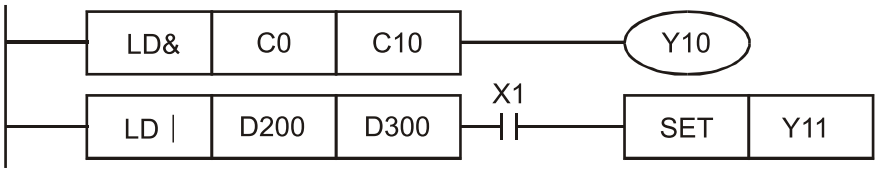

API	Instruction code	Operand	Function
218–220	D **AND#**	S_1, S_2	Contact type logical operation AND#

Operand \ Type	Bit devices			Word devices							
	X	Y	M	K	H	KnX	KnY	KnM	T	C	D
S_1				*	*	*	*	*	*	*	*
S_2				*	*	*	*	*	*	*	*

Caution for using operand: # : & | ^

- See the specification of each model for the scope of device's usage.

16-bit instruction (5 steps)

AND#	Continuous execution type	-	-

32-bit instruction (9 steps)

DAND#	Continuous execution type	-	-

Associated flag: none

Description

- S_1: source device 1
  S_2: source device 2
- This instruction is to compare S_1 and S_2, if the result ≠ 0, the continuity of the instruction is enabled; if the result = 0, the continuity of the instruction is disabled.
- AND# (#: &, |, ^) instruction is used for serial connection with contacts

API No.	16-bit instruction	32-bit instruction	Continuity condition	Discontinuity condition
218	AND&	**D**AND&	S_1 & S_2 ≠0	S_1 & S_2 =0
219	AND|	**D**AND|	S_1 | S_2 ≠0	S_1 | S_2 =0
220	AND^	**D**AND^	S_1 ^ S_2 ≠0	S_1 ^ S_2 =0

- &: logical operation with AND operator
- |: Logical operation with OR operator
- ^: Logical operation with XOR operator

Example

- When X0 =ON, and C1 and C10 perform "AND" logical operation with the result is not 0, then Y10 = ON
- When X1 = OFF, and D10 and D0 perform "OR" logical operation with the result is not 0, then Y11 = ON and hold.
- When X2 = ON, and 32-bit registers D200 (D201) and D100 (D101) perform "XOR" logical operation with the result is not 0 or M3 = ON, then M50 = ON.

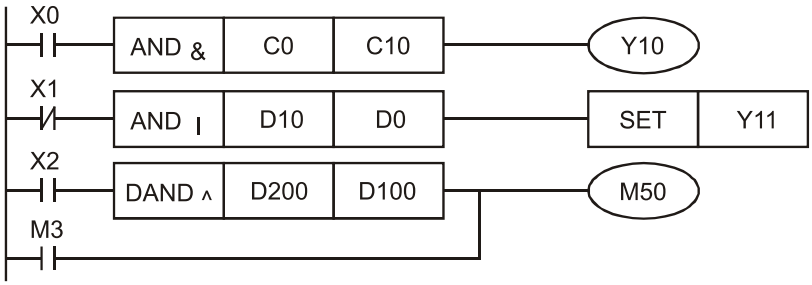

API	Instruction code			Operand	Function
221–223	D	**OR#**		S_1, S_2	Contact type logical operation OR#

Type / Operand	Bit devices			Word devices							
	X	Y	M	K	H	KnX	KnY	KnM	T	C	D
S_1				*	*	*	*	*	*	*	*
S_2				*	*	*	*	*	*	*	*

Caution for using operand: # : & | ^

- See the specification of each model for the scope of device's usage.

16-bit instruction (5 steps)

OR#	Continuous execution type	-	-

32-bit instruction (9 steps)

DOR#	Continuous execution type	-	-

Associated flag: none

Description

- S_1: source device 1
  S_2: source device 2
- This instruction is to compare S_1 and S_2, if the result ≠ 0, the continuity of the instruction is enabled; if the result = 0, the continuity of the instruction is disabled.
- OR# (#: &, |, ^) instruction is used for parallel connection with contacts

API No.	16-bit instruction	32-bit instruction	Continuity condition	Discontinuity condition
221	OR&	**D**OR&	S_1 & S_2 ≠0	S_1 & S_2 =0
222	OR|	**D**OR|	S_1 | S_2 ≠0	S_1 | S_2 =0
223	OR^	**D**OR^	S_1 ^ S_2 ≠0	S_1 ^ S_2 =0

- &: logical operation with AND operator
- |: Logical operation with OR operator
- ^: Logical operation with XOR operator

Example

- When X0 =ON, or C0 and C10 perform "AND" logical operation with the result is not 0, then Y0 = ON
- When both X2 and M30 are ON, or 32-bit registers D10 (D11) and D20 (D21) perform "OR" logical operation with the result is not 0, or 32-bit counter C235 and 32-bit register D200 (D201) perform "XOR" logical operation with the result is not 0, then M60 = ON.

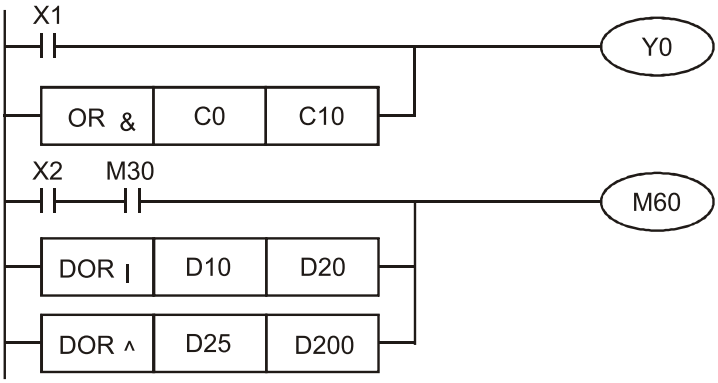

API	Instruction code			Operand	Function
224–230	D	**LD※**		S_1, S_2	Contact type comparison LD※

Type / Operand	Bit devices			Word devices							
	X	Y	M	K	H	KnX	KnY	KnM	T	C	D
S_1				*	*	*	*	*	*	*	*
S_2				*	*	*	*	*	*	*	*

Caution for using operand: ※: =, >, <, <>, ≦, ≧

- See the specification of each model for the scope of device's usage.

16-bit instruction (5 steps)

LD※	Continuous execution type	-	-

32-bit instruction (9 steps)

DLD※	Continuous execution type	-	-

Associated flag: none

Description

- S_1: source device 1
  S_2: source device 2
- This instruction is to compare S_1 and S_2, take API 224 (LD=) as an example, if the result is "equal to", the continuity of the instruction is enabled; if the result is "not equal to", the continuity of the instruction is disabled.
- LD※ (※: =, >, <, <>, ≦, ≧) instruction is used for direct connection with busbar

API No.	16-bit instruction	32-bit instruction	Continuity condition	Discontinuity condition
224	LD=	**D**LD=	$S_1 = S_2$	$S_1 \neq S_2$
225	LD>	**D**LD>	$S_1 > S_2$	$S_1 \leq S_2$
226	LD<	**D**LD<	$S_1 < S_2$	$S_1 \geq S_2$
228	LD<>	**D**LD<>	$S_1 \neq S_2$	$S_1 = S_2$
229	LD<=	**D**LD<=	$S_1 \leq S_2$	$S_1 > S_2$
230	LD>=	**D**LD>=	$S_1 \geq S_2$	$S_1 < S_2$

Example

- When C10 = K200, Y10 = ON.
- When D200 > K-30 and X1 = ON, Y11 = ON and hold.

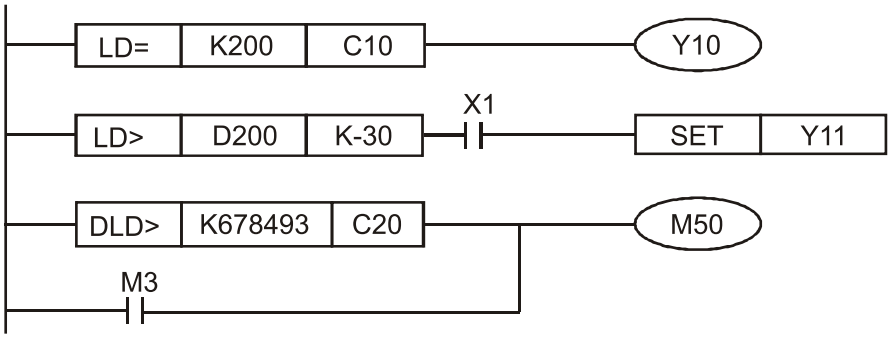

API	Instruction code	Operand	Function
232–238	D **AND※**	S_1, S_2	Contact type comparison AND※

Operand \ Type	Bit devices			Word devices							
	X	Y	M	K	H	KnX	KnY	KnM	T	C	D
S_1				*	*	*	*	*	*	*	*
S_2				*	*	*	*	*	*	*	*

Caution for using operand: ※: =, >, <, <>, ≦, ≧

- See the specification of each model for the scope of device's usage.

16-bit instruction (5 steps)

AND※	Continuous execution type	-	-

32-bit instruction (9 steps)

DAND※	Continuous execution type	-	-

Associated flag: none

Description

- S_1: source device 1
  S_2: source device 2
- This instruction is to compare S_1 and S_2, take API 232 (AND=) as an example, if the result is "equal to", the continuity of the instruction is enabled; if the result is "not equal to", the continuity of the instruction is disabled.
- AND※ (※: =, >, <, <>, ≦, ≧) instruction is used for serial connection with contacts

API No.	16-bit instruction	32-bit instruction	Continuity condition	Discontinuity condition
232	AND=	**D**AND=	$S_1 = S_2$	$S_1 \neq S_2$
233	AND>	**D**AND>	$S_1 > S_2$	$S_1 \leq S_2$
234	AND<	**D**AND<	$S_1 < S_2$	$S_1 \geq S_2$
236	AND<>	**D**AND<>	$S_1 \neq S_2$	$S_1 = S_2$
237	AND<=	**D**AND<=	$S_1 \leq S_2$	$S_1 > S_2$
238	AND>=	**D**AND>=	$S_1 \geq S_2$	$S_1 < S_2$

Example

- When X0 = ON, and the current value of C10 = K200, then Y10 = ON
- When X1 = OFF, and D0 ≠ K-10, then Y11 = ON and hold.
- When X2 = ON, the 32-bit register D0 (D11) is less than 678,493 or M3 = ON, then M50 = ON.

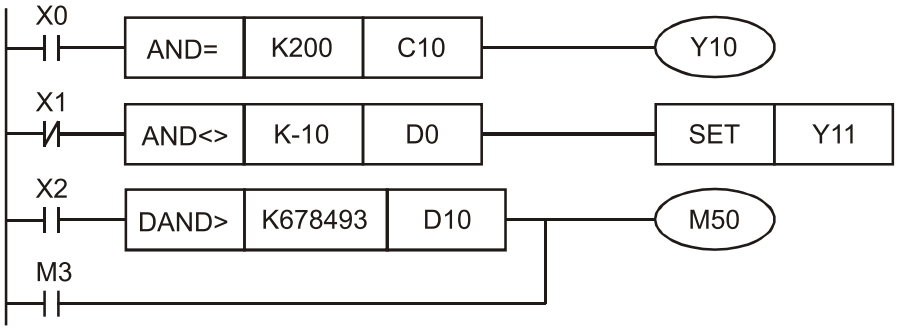

API	Instruction code	Operand	Function
240–246	D **OR※**	S_1, S_2	Contact type comparison OR※

Type / Operand	Bit devices			Word devices							
	X	Y	M	K	H	KnX	KnY	KnM	T	C	D
S_1				*	*	*	*	*	*	*	*
S_2				*	*	*	*	*	*	*	*

Caution for using operand: ※: =, >, <, <>, ≦, ≧

- See the specification of each model for the scope of device's usage.

16-bit instruction (5 steps)

OR※	Continuous execution type	-	-

32-bit instruction (9 steps)

DOR※	Continuous execution type	-	-

Associated flag: none

Description

- S_1: source device 1
  S_2: source device 2
- This instruction is to compare S_1 and S_2, take API 240 (OR=) as an example, if the result is "equal to", the continuity of the instruction is enabled; if the result is "not equal to", the continuity of the instruction is disabled.
- OR※ (※: =, >, <, <>, ≦, ≧) instruction is used for parallel connection with contacts

API No.	16-bit instruction	32-bit instruction	Continuity condition	Discontinuity condition
240	OR=	**D**OR=	$S_1 = S_2$	$S_1 \neq S_2$
241	OR>	**D**OR>	$S_1 > S_2$	$S_1 \leq S_2$
242	OR<	**D**OR<	$S_1 < S_2$	$S_1 \geq S_2$
244	OR<>	**D**OR<>	$S_1 \neq S_2$	$S_1 = S_2$
245	OR<=	**D**OR<=	$S_1 \leq S_2$	$S_1 > S_2$
246	OR>=	**D**OR>=	$S_1 \geq S_2$	$S_1 < S_2$

Example

- When X0 = ON, and the current value of C10 = K200, then Y10 = ON
- When X1 =OFF, and D0 ≠ K-10, then Y11 = ON and hold.
- When X2 = ON, the 32-bit register D0 (D11) is less than 678,493 or M3 = ON, then M50 = ON.

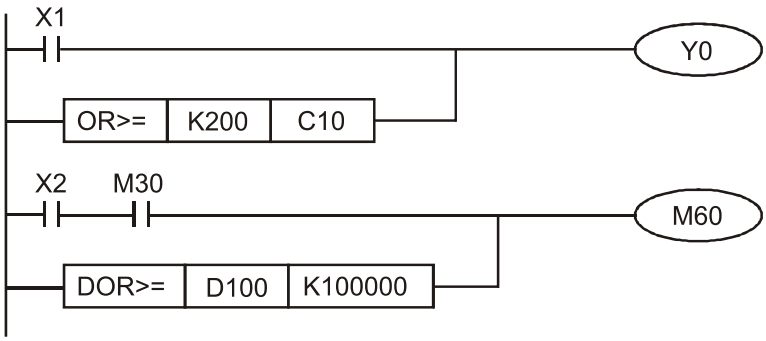

API	Instruction code			Operand	Function
275–280	D	**FLD※**		S_1, S_2	Floating-point number contact type comparison LD※

Type / Operand	Bit devices			Word devices							
	X	Y	M	K	H	KnX	KnY	KnM	T	C	D
S_1									*	*	*
S_2									*	*	*

Caution for using operand: # : & | ^

- See the specification of each model for the scope of device's usage.

16-bit instruction

-	-	-	-

32-bit instruction (9 steps)

FLD※	Continuous execution type	-	-

Associated flag: none

Description

- S_1: source device 1
  S_2: source device 2
- This instruction compares the content in S_1 and S_2. Take "FLD=" as an example, if the result is "equal to", the continuity of the instruction is enabled; if the result is "not equal to", the continuity of the instruction is disabled.
- Use FLD※ instruction, users can execute operation directly by inputting floating-point value (e.g. F1.2) in S_1, S_2 or storing floating-point value in the register D.
- The instruction is used for direct connection with busbar

API No.	32-bit instruction	Continuity condition	Discontinuity condition
275	FLD=	$S_1 = S_2$	$S_1 \neq S_2$
276	FLD>	$S_1 > S_2$	$S_1 \leq S_2$
277	FLD<	$S_1 < S_2$	$S_1 \geq S_2$
278	FLD<>	$S_1 \neq S_2$	$S_1 = S_2$
279	FLD<=	$S_1 \leq S_2$	$S_1 > S_2$
280	FLD>=	$S_1 \geq S_2$	$S_1 < S_2$

Example

- When the floating-point value in D200 (D201) ≤ F1.2 and X1 is ON, then Y21 is being triggered and hold.

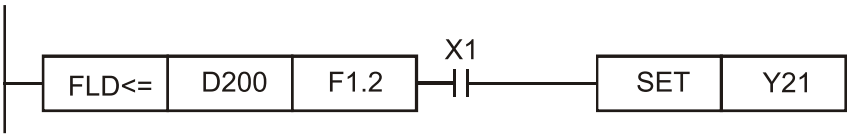

API	Instruction code			Operand	Function
281–286	D	**FAND※**		S_1, S_2	Floating-point number contact type comparison AND※

Type / Operand	Bit devices			Word devices							
	X	Y	M	K	H	KnX	KnY	KnM	T	C	D
S_1									*	*	*
S_2									*	*	*

Caution for using operand: # : & | ^

- See the specification of each model for the scope of device's usage.

16-bit instruction

-	-	-	-

32-bit instruction (9 steps)

FAND※	Continuous execution type	-	-

Associated flag: none

Description

- S_1: source device 1
  S_2: source device 2
- This instruction compares the content in S_1 and S_2. Take "FAND=" as an example, if the result is "equal to", the continuity of the instruction is enabled; if the result is "not equal to", the continuity of the instruction is disabled.
- Use FAND※ instruction, users can execute operation directly by inputting floating-point value (e.g. F1.2) in S_1, S_2 or storing floating-point value in the register D.
- The instruction is used for direct connection with busbar

API No.	32-bit instruction	Continuity condition	Discontinuity condition
281	FAND=	$S_1 = S_2$	$S_1 \neq S_2$
282	FAND>	$S_1 > S_2$	$S_1 \leq S_2$
283	FAND<	$S_1 < S_2$	$S_1 \geq S_2$
284	FAND<>	$S_1 \neq S_2$	$S_1 = S_2$
285	FAND<=	$S_1 \leq S_2$	$S_1 > S_2$
286	FAND>=	$S_1 \geq S_2$	$S_1 < S_2$

Example

- When X1 = OFF, and D100 (D101) ≠ F1.2, then Y21 = ON and hold.

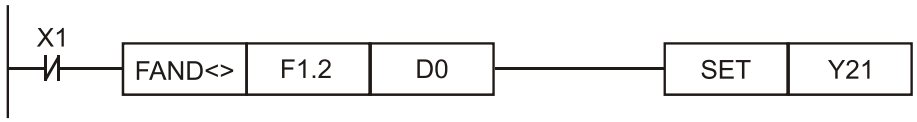

API	Instruction code	Operand	Functions
287–292	**FOR※**	S_1, S_2	Floating-point number contact type comparison OR※

Type / Operand	Bit devices			Word devices							
	X	Y	M	K	H	KnX	KnY	KnM	T	C	D
S_1									*	*	*
S_2									*	*	*

Caution for using operand: # : & | ^

- See the specification of each model for the scope of device's usage.

16-bit instruction			
-	-	-	-

32-bit instruction (9 steps)			
FOR※	Continuous execution type	-	-

Associated flag: none

Description

- S_1: source device 1
  S_2: source device 2
- This instruction compares the content in S_1 and S_2. Take "FOR=" as an example, if the result is "equal to", the continuity of the instruction is enabled; if the result is "not equal to", the continuity of the instruction is disabled.
- Use FOR※ instruction, users can execute operation directly by inputting floating-point value (e.g., F1.2) in S_1, S_2 or storing floating-point value in the register D.
- The instruction is used for direct connection with busbar

API No.	32-bit instruction	Continuity condition	Discontinuity condition
287	FOR=	$S_1 = S_2$	$S_1 \neq S_2$
288	FOR>	$S_1 > S_2$	$S_1 \leq S_2$
289	FOR<	$S_1 < S_2$	$S_1 \geq S_2$
290	FOR<>	$S_1 \neq S_2$	$S_1 = S_2$
291	FOR<=	$S_1 \leq S_2$	$S_1 > S_2$
292	FOR>=	$S_1 \geq S_2$	$S_1 < S_2$

Example

- When both X2 and M30 are ON, or the content in D100 (D101) ≥ F1.234, then M60 = ON.

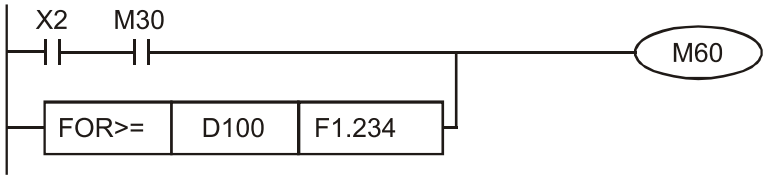

15-6-5 Instructions of special application instructions for AC motor drives

API	Instruction code			Operand	Function
139	D	**RPR**	P	S_1, S_2	Read parameters of drive

Type / Operand	Bit devices			Word devices							
	X	Y	M	K	H	KnX	KnY	KnM	T	C	D
S_1				*	*						*
S_2											*

Caution for using operand: none

16-bit instruction (5 steps)

RPR	Continuous execution type	RPRP	Pulse execution type

32-bit instruction

-	-	-	-

Associated flag: none

Description	● S_1: the parameter address for reading data S_2: the register for storing the read data

API	Instruction code			Operand	Functions
140	D	**WPR**	P	S_1, S_2	Write parameters of drive

Type / Operand	Bit devices			Word devices							
	X	Y	M	K	H	KnX	KnY	KnM	T	C	D
S_1				*	*						*
S_2				*	*						*

Caution for using operand: none

16-bit instruction (5 steps)			
WPR	Continuous execution type	WPRP	Pulse execution type

32-bit instruction			
-	-	-	-

Associated flag: none

Description

- S_1: the data to be written
  S_2: the parameter address for writing data

Example

- Read H01.00 data of MP300 and write into D0, read H01.01 data and write into D1.
- When M0 = ON, write the content of D10 into MP300's Pr.04-00 (multi-speed 1).
- If parameters are written successfully, M1017 = ON.
- WPR instruction uses in MP300 does not support writing to 20XX address, but RPR instruction supports reading 21XX, 22XX.

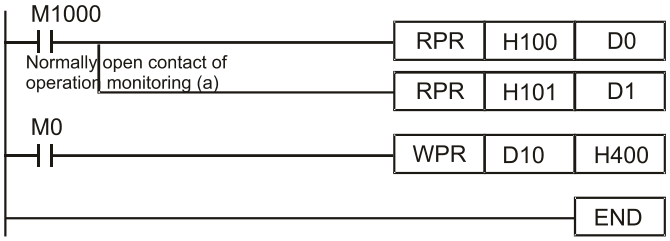

Suggestion

- Note that when you use WPR instruction and write in parameters, most parameters are recorded at the same time of writing, and these parameters allows 10^9 times for change. A memory write error may occur if parameters are written more than 10^9 times.
- The following commonly used parameters have been specially processed, so there is no limit to the number of write times.
  Pr.00-11: speed control mode
  Pr.00-27: user-defined value 1
  Pr.01-12: acceleration time 1
  Pr.01-13: deceleration time 1
  Pr.01-14: acceleration time 2
  Pr.01-15: deceleration time 2
  Pr.01-16: acceleration time 3
  Pr.01-17: deceleration time 3
  Pr.01-18: acceleration time 4
  Pr.01-19: deceleration time 4
  Pr.02-12: multi-function input mode selection
  Pr.02-18: multi-function output mode selection
  Pr.04-50–04-69: PLC temporarily store parameter 0–19
  Pr.08-04: upper limit of integral control
  Pr.08-05: PID output command limit (positive limit)
- The calculation of write times is based on the written value whether is being changed or not. For example, write the same value 100 times at the same time counts as once only.
- If you are not sure that the use of WPR instruction in PLC writing, we recommend you use WPRA instruction.

API	Instruction code			Operand	Function
141		**FPID**	P	S_1, S_2, S_3, S_4	Drive PID control mode

Type / Operand	Bit devices			Word devices							
	X	Y	M	K	H	KnX	KnY	KnM	T	C	D
S_1				*	*						*
S_2				*	*						*
S_3				*	*						*
S_4				*	*						*

Caution for using operand: none

16-bit instruction (9 steps)			
FPID	Continuous execution type	FPIDP	Pulse execution type

32-bit instruction			
-	-	-	-

Associated flag: none

Description

- S_1: PID set point selection
  S_2: PID function proportional gain (P)
  S_3: PID function integral time (I)
  S_4: PID function differential time (D)
- FPID instruction can directly control the feedback control PID of AC motor drive, such as Pr.08-00 (terminal selection of PID feedback), Pr.08-01 (proportional gain, P), Pr.08-02 (integral time, I), and Pr.08-03 (differential time, D).

Example

- When M0 = ON, set Pr.08-00 = 0 (means PID function disabled), Pr.08-01 = 0, Pr.08-02 = 1 (unit: 0.01 sec.), and Pr.08-03 = 1 (unit: 0.01 sec.).
- When M1 = ON, set Pr.08-00 = 0 (means PID function disabled), Pr.08-01 = 1 (unit: 0.01), Pr.08-02 = 0, and Pr.08-03 = 0.
- When M2 = ON, set Pr.08-00 = 1 (negative PID feedback: by analog input), Pr.08-01 = 1 (unit: 0.01), Pr.08-02 = 0, and Pr.08-03 = 0.
- D1027: frequency command after PID calculation

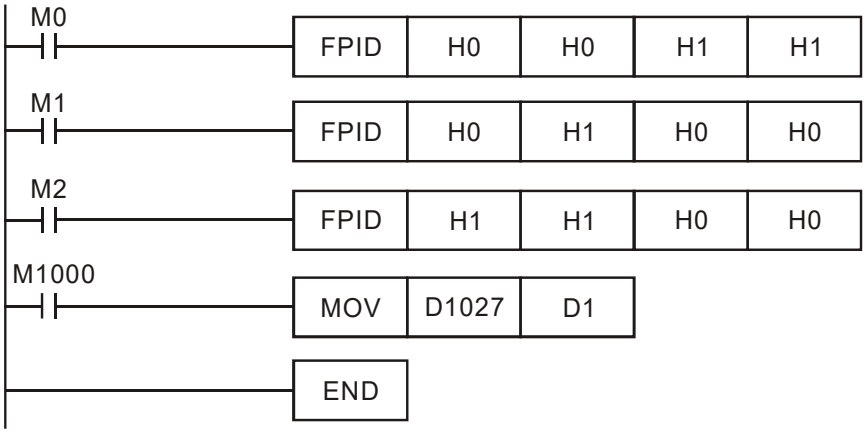

API	Instruction code	Operand	Function
142	**FREQ** P	S_1, S_2, S_3	AC motor drive speed control

Operand \ Type	Bit devices			Word devices							
	X	Y	M	K	H	KnX	KnY	KnM	T	C	D
S_1				*	*						*
S_2				*	*						*
S_3				*	*						*

Caution for using operand: none

16-bit instruction (7 steps)			
FREQ	Continuous execution type	FREQP	Pulse execution type

32-bit instruction			
-	-	-	-

Associated flag: M1015

Description

- S_1: frequency command
  S_2: acceleration time
  S_3: deceleration time
- S_2, S_3: for the setting of acceleration time / deceleration time, the number of decimal places is determined by Pr.01-45.
  For example, when Pr.01-45 = 0 (unit: 0.01 sec.)
  See the ladder diagram below, if set S_2 as 50, it means 0.5 seconds; if set S_3 as 60, it means 0.6 seconds.
- The FREQ instruction can control AC motor drive's frequency command, acceleration time and deceleration time.; and it also can control operation by using special register.
  Such as:
  1. M1025: control RUN (ON) / STOP (OFF) of AC motor drive
     [Note: RUN is valid when servo ON (M1040 = ON).]
  2. M1026: control the direction of operation FWD (OFF) / REV (ON) of AC motor drive
  3. M1040: control servo ON (ON) / servo OFF (OFF)
  4. M1042: trigger quick stop (ON) / do not trigger quick stop (OFF)
  5. M1044: pause (ON) / release pause (OFF)
  6. M1052: lock frequency (ON) / release lock frequency (OFF)

Example

- M1025: control RUN (ON) / STOP (OFF) of AC motor drive
  M1026: control the direction of operation FWD (OFF) / REV (ON) of AC motor drive
  M1015: frequency reached
- When M10 = ON, set AC motor drive's frequency command K300 (3.00 Hz) with acceleration time and deceleration time of 0.
  When M11 = ON, set AC motor drive's frequency command K3000 (30.00 Hz) with acceleration time of 50 (0.5 sec.) and deceleration time of 60 (0.6 sec.). (when Pr.01-45 = 0)
- When M11 = OFF, AC motor drive's frequency command becomes 0.

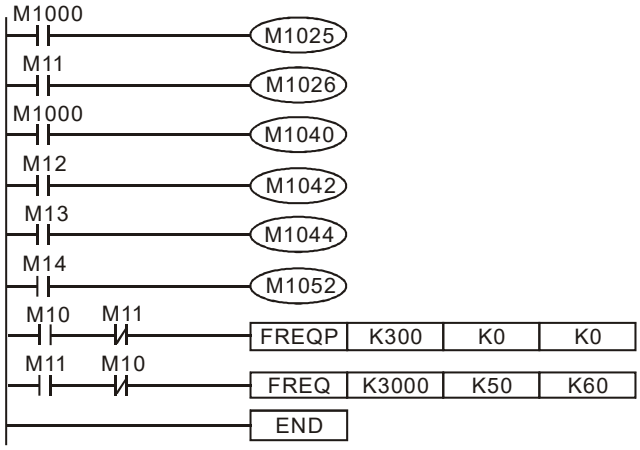

	● Pr.09-33 is defined as whether the reference command before PLC execution is cleared. bit 0: before the PLC scan, whether the target frequency is cleared to be 0. (PLC is ON, and FREQ instruction is in the program) bit 1: before the PLC scan, whether the target torque is cleared to be 0. (PLC is ON, and TORQ instruction is in the program) bit 2: before the PLC scan, whether the speed limit in torque mode is cleared to be 0. (PLC is ON, and TORQ instruction is in the program) For example: when a user is writing a program 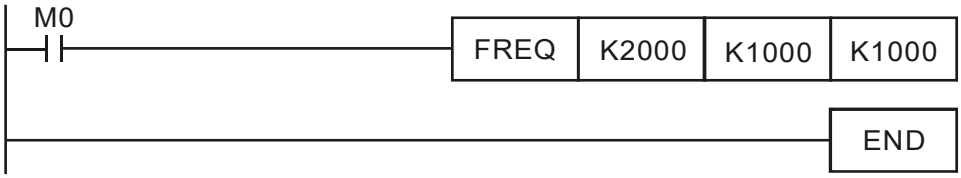 If we force M0 to be 1, then the frequency command is 20.00 Hz. If M0 = 0, it has different situations: Case1: when Pr.09-33 bit0 is 0, and M0 = 0, then the frequency command remains at 20.00 Hz. Case2: when Pr.09-33 bit0 is 1, and M0 = 0, then the frequency command becomes 0.00 Hz. This is because that before the PLC scans the programs, when Pr.09-33 bit0 = 1, the frequency will be cleared to be 0 first; when Pr.09-33 bit0 = 0, the action to clear the frequency to be 0 is not performed.

API	Instruction code			Operand	Function
323	D	**WPRA**	P	S_1, S_2	Write parameters of drive (in RAM only)

Type / Operand	Bit devices			Word devices							
	X	Y	M	K	H	KnX	KnY	KnM	T	C	D
S_1				*	*						*
S_2				*	*						*

Caution for using operand: none

16-bit instruction (5 steps)

WPRA	Continuous execution type	WPRAP	Pulse execution type

32-bit instruction

-	-	-	-

Associated flag: none

Description

- S_1: the data to be written
  S_2: the parameter address for writing data
- When WPRA is executed, it is only written to RAM area, and will return to the previous record value after powering OFF.

Example

- Read H01.00 data of MP300 and write into D0, read H01.01 data and write into D1.
- When M0 = ON, write the content of D10 into MP300's Pr.04-00 (multi-speed 1).
- If parameters are written successfully, M1017 = ON.
- WPR instruction uses in MP300 does not support writing to 20XX address, but RPR instruction supports reading 21XX, 22XX.

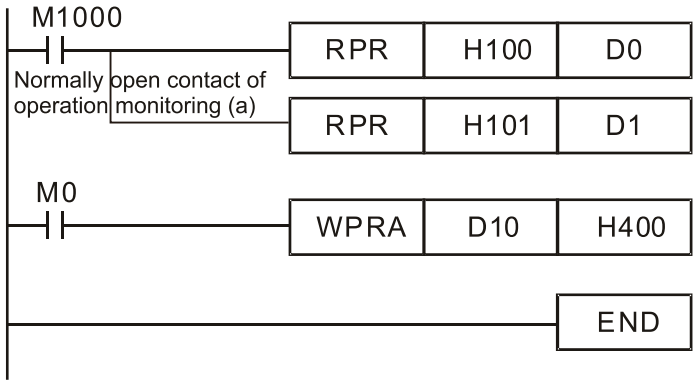

15-7 Fault Display and Treatment

Code	ID	Description	Recommended Treatment
PLod	50	Download PLC programs, the component in codes exceeds the range, for example, T component supports the range T0–T159, if there is T160 in grammar, then displays a PLod fault when downloading the programs.	Check if there are any faults in programs. Download the programs again and check after correcting.
PLSv	51	During the execution of PLC programs, discovers that the assigned address that PLC writes in is unreasonable, then displays a PLSv fault.	Check if there are any faults in programs. Download the programs again and check after correcting.
PLdA	52	During the execution of PLC programs, the external Modbus reads / writes unreasonable components to the internal PLC, then displays a PLdA fault.	Check if the upper unit transmits the correct command
PLFn	53	Unsupported command has used while downloading the program, then displays a PLFn fault.	Check if the firmware of the drive is the old version. If yes, contact with Delta.
PLor	54	The program detects internal source code error during PLC operation, then displays a PLor fault.	1. PLC function disabled. 2. Delete PLC programs (set Pr.00-02 = 6). 3. Enable PLC function. 4. Re-download the PLC program
PLFF	55	The corresponding instructions PLC executes during operation are unreasonably, then displays a PLFF fault.	When starting the PLC function and there is no program in the PLC, the PLFF warning occurs. This is a normal warning, please download the program.
PLSn	56	The program detects checksum error during PLC operation	1. PLC function disabled. 2. Delete PLC programs (set Pr.00-02 = 6). 3. Enable PLC function. 4. Re-download the PLC program
PLEd	57	There is no “END” command during PLC operation	1. PLC function disabled. 2. Delete PLC programs (set Pr.00-02 = 6). 3. Enable PLC function. 4. Re-download the PLC program
PLCr	58	The MC command is continuously used for more than 9 times	The MC command cannot be used continuously for 9 times. Check and correct the program, then download the program again.
PLdF	59	PLC download is forced to stop, so the written program is incomplete	Check if there is any error in the program and download the program again.
PLSF	60	PLC scan time exceeds the maximum allowable time	Check if the source code is correct and download the program again.

*ID: Warning code

15-8 Explanation of Speed Mode Control with PLC

The relevant registers in speed mode are listed below:

Control special M

Special M	Function	Attribute
M1025	Frequency of AC motor drive = frequency setting (ON) / frequency of AC motor drive = 0 (OFF)	RW
M1026	The operating direction of AC motor drive, FWD (OFF) / REV (ON)	RW
M1040	Power supply by hardware (Servo ON)	RW
M1042	Quick stop	RW
M1044	Halt	RW
M1052	Lock frequency (lock, frequency locked at the current operating frequency)	RW

Status special M

Special M	Function	Attribute
M1015	Frequency reached (use with M1025)	RO
M1056	Already power supply by hardware (Servo ON ready)	RO
M1058	On quick stopping	RO

Control special D

Special D	Function	Attribute
D1060	Mode setting (speed mode = 0)	RW

Status special D

Special D	Function	Attribute
D1037	The output frequency of AC motor drive (XXX.XX)	RO
D1050	Actual operating mode (speed mode = 0)	RO

Speed mode control command:

FREQ(P)	S1	S2	S3
	Target speed	1st acceleration time	1st deceleration time

The example for speed mode control:

Before executing speed control, if the control method is FOC (magnetic field orientation), you have to set up the motor parameters to be used first.

1. Set D1060 = 0, to make the AC motor drive be speed mode (default).
2. Control frequency, acceleration time and deceleration time by FREQ instruction.
3. Set M1040 =1, AC motor drive is being magnetized, but the frequency is zero.
4. Set M1025 = 1, the frequency command of AC motor drive becomes the frequency that FREQ instruction designates. The acceleration and deceleration also operate according to the acceleration time and deceleration time that FREQ instruction designates.

5. Available to lock the current operating frequency by controlling M1052.
6. Available to execute temporarily stop (halt) by controlling M1044, the deceleration method is according to the deceleration setting.
7. Available to execute quick stop by controlling M1042, the deceleration method will decelerate as soon as possible on the premise that no error occurs. (An error may occur if the load is too large)
8. The authority to control is M1040 (Servo ON) > M1042 (Quick stop) > M1044 (Halt) > M1052 (LOCK)

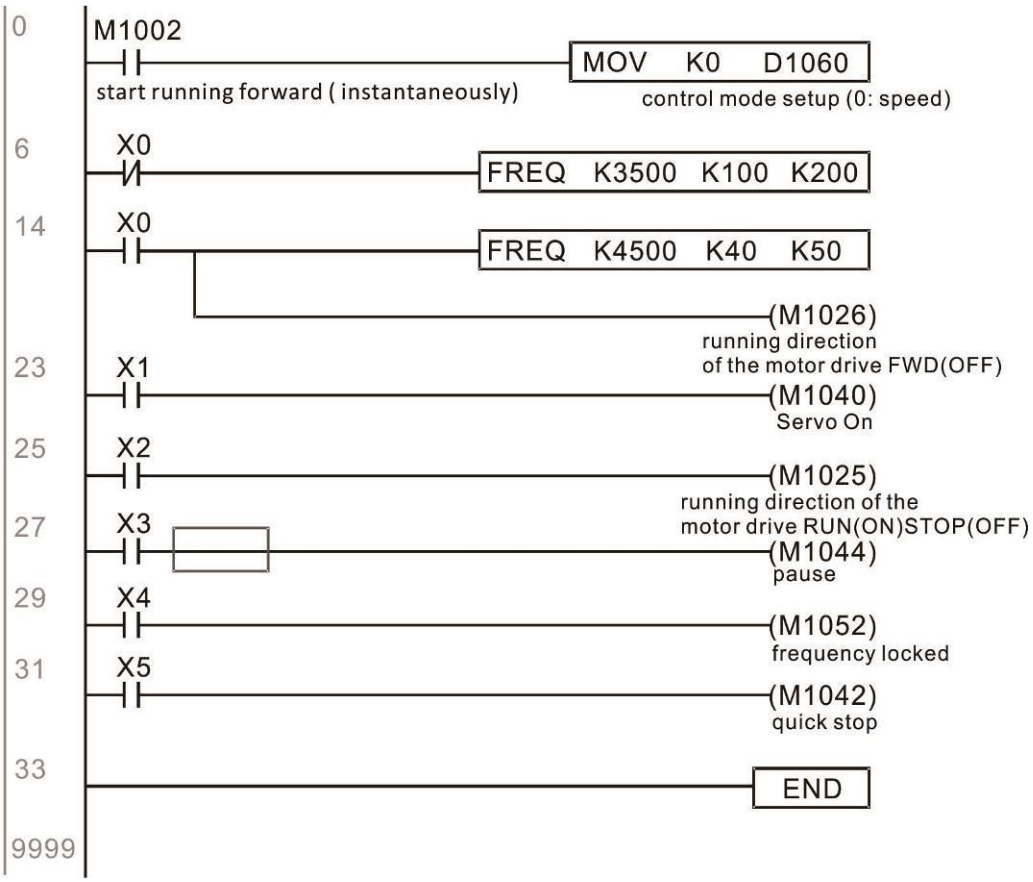

15-9 The Applications for Remote IO Control of Modbus (Use MODRW)

The internal PLC of MP300 supports read / write for RS-485, which can be realized using the MODRW instruction. Before writing programs, you should set Pr.09-31 = -12 (defined the serial port of RS-485 as PLC use). After the setting is completed, you can use the standard communication format defined by RS-485 to perform read and write commands to other stations. Communication speed is defined by Pr.09-01, communication format is defined by Pr.09-04, and the PLC's current station address is defined by Pr.09-35.

The communication formats currently supported by MP300 include reading Coil (0x01), reading Input (0x02), reading Register (0x03), writing a single Register (0x06), writing multiple Coils (0x0F) and writing multiple Registers (0x10). The explanations and their usages are as follows:

MODRW instruction					General meaning	Defined Delta's PLC as the slave device	Defined Delta's AC motor drive as the slave device
S1	S2	S3	S4	S5			
Station number	Command	Address	Correspond to Dx	Length			
K3	H01	H500	D0	K18	Read Coil (bit)	Read 18 bits of data corresponding to slave station 3 PLC Y0 to Y21. This data is stored by bit 0 to 15 of this station's D0 and bit 0 to bit 3 of D1.	Does not support this function.
K3	H02	H400	D10	K10	Read Input (bit)	Read 10 bits of data corresponding to slave station 3 PLC X0 to X11. This data is stored by bit 0 to 9 of this station's D10.	Does not support this function.
K3	H03	H600	D20	K3	Read Register (word)	Read 3 words of data corresponding to slave station 3 PLC T0 to T2. This data is stored by D20 to D22.	Read 3 words of data corresponding to slave station 3 converter Pr.06-00 to 06-02. This data is stored by D20 to D22
K3	H06	H610	D30	XX	Write a single Register (word)	Write slave station 3 PLC's T16 to this station's D30 value	Write slave station 3 converter 06 to 16 parameter to this station's D30 value
K3	H0F	H509	D40	K10	Write multiple Coil (bit)	Write slave station 3 PLC's Y11 to Y22 to bit 0 to 9 of D40.	Does not support this function.
K3	H10	H602	D50	K4	Write multiple Registers (word)	Write slave station 3 PLC's T2 to T5 to D50 to D53	Write slave station 3 converter 06-02 to 06-05 parameters to this station's D50 to D53

* XX indicates it doesn't matter.

After implementing MODRW, the status will be displayed in M1077 (RS-485 read / write completed), M1078 (485 read / write error), and M1079 (485 read / write time out). M1077 is defined so as to immediately revert to 0 after the MODRW command has been implemented. However, any of three situations—a report of no error, a data error report, or time out with no report—will cause the status of M1077 to change to ON.

Example: tests of functions

Let the transmission sequence switch to the first data when turning ON the drive.

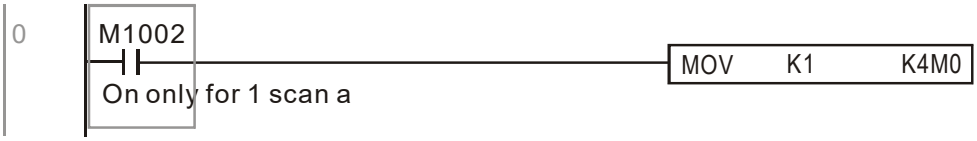

When the reported message indicates no error, it will switch to the next transmitted command.

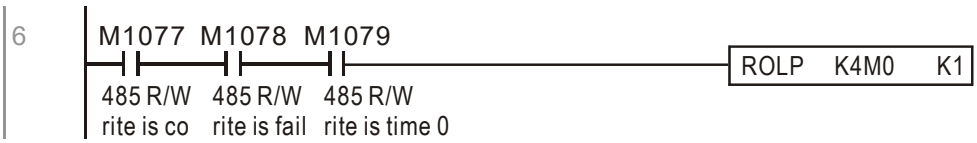

If time out occurs or an error is reported, M1077 will change to ON. At this moment, after a delay of 30 scanning cycles, it will issue the original command once again.

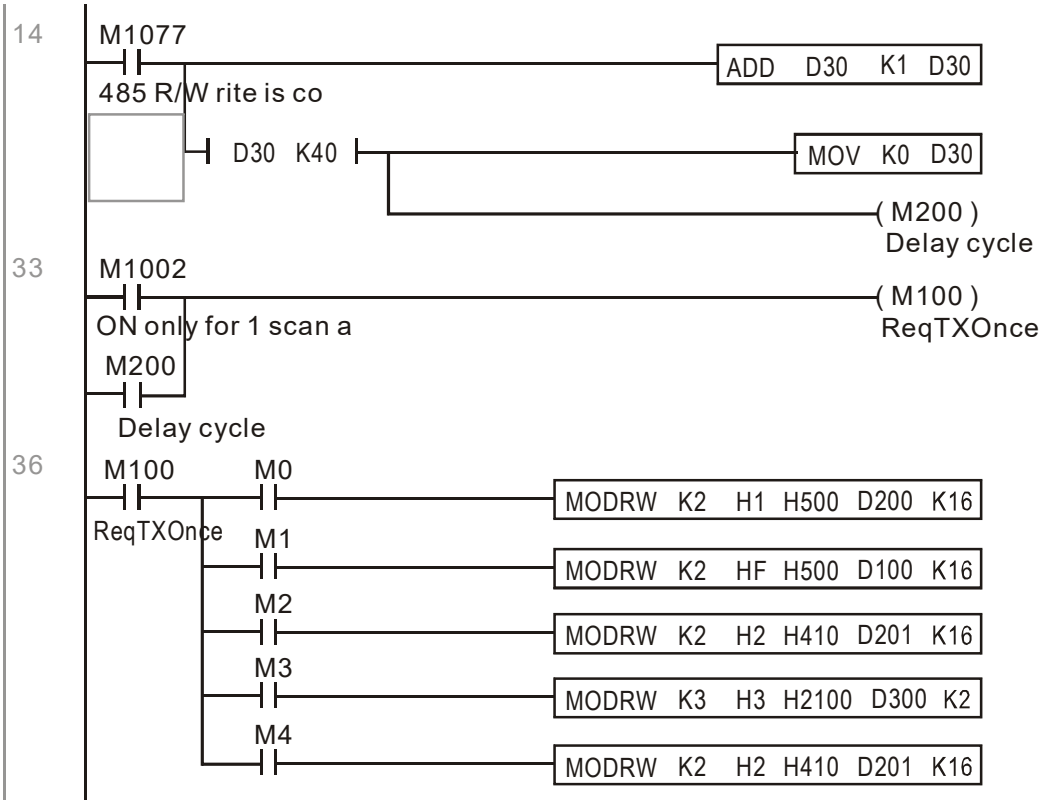

After all instructions have been sent, and restart.

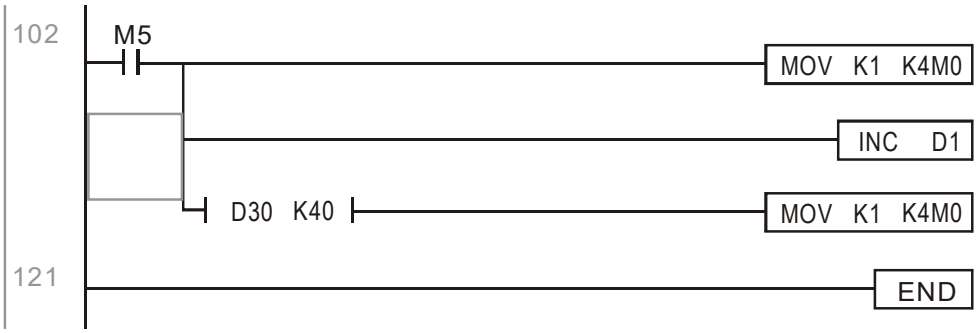

Practical application:

To control RTU-485 module.

Step 1: set communication format. Assume that the communication format is 115200, 8,N,2, RTU

MP300：the default PLC station address is set as 2 (09-35)

Pr.09-31 = -12 (COM1 is controlled by the PLC), Pr.09-01 = 115.2 (The communication speed is 115200)

Pr.09-04 = 13 (The format is 8,N,2, RTU)

RTU-485: The station address = 8 (as an example)

ID7	ID6	ID5	ID4	ID3	ID2	ID1	ID0
0	0	0	0	1	0	0	0

PA3	PA2	PA1	PA0	DR2	DR1	DR0	A/R
1	**0**	**0**	**0**	**1**	**1**	**1**	**0**

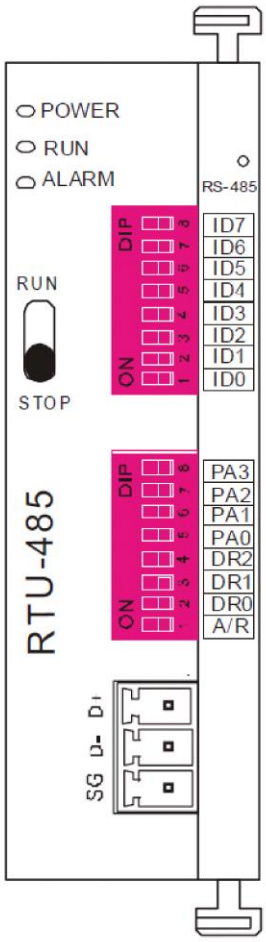

Communication station #:
ID0~ ID7 are defined as 2^0, 2^1, 2^2…2^6, 2^7

Communication protocol

PA3	PA2	PA1	PA0	A/R	Communication Protocol
OFF	OFF	OFF	OFF	ON	7,E,1，ASCII
OFF	OFF	OFF	ON	ON	7,O,1，ASCII
OFF	OFF	ON	OFF	ON	7,E,2，ASCII
OFF	OFF	ON	ON	ON	7,O,2，ASCII
OFF	ON	OFF	OFF	ON	7,N,2，ASCII
OFF	ON	OFF	ON	ON	8,E,1，ASCII
OFF	ON	ON	OFF	ON	8,O,1，ASCII
OFF	ON	ON	ON	ON	8,N,1，ASCII
ON	OFF	OFF	OFF	ON	8,N,2，ASCII
OFF	ON	OFF	ON	OFF	8,E,1，RTU
OFF	ON	ON	OFF	OFF	8,O,1，RTU
OFF	ON	ON	ON	OFF	8,N,1，RTU
ON	OFF	OFF	OFF	OFF	8,N,2，RTU

DR2	DR1	DR0	Communicaton Speed
OFF	OFF	OFF	1,200 bps
OFF	OFF	ON	2,400 bps
OFF	ON	OFF	4,800 bps
OFF	ON	ON	9,600 bps
ON	OFF	OFF	19,200 bps
ON	OFF	ON	38,400 bps
ON	ON	OFF	57,600 bps
ON	ON	ON	115,200 bps

Step 2: install control equipment.

We sequentially connect a DVP16-SP (8 IN 8 OUT), DVP-04AD (4 channels AD), DVP02DA (2 channels DA), and DVP-08ST (8 switches) to the RTU-485.

The following corresponding locations can be obtained from the RTU-485's configuration definitions:

Module	Terminals	485 Address
DVP16-SP	X0–X7	0400H–0407H
	Y0–Y7	0500H–0507H
DVP-04AD	AD0–AD3	1600H–1603H
DVP02DA	DA0–DA1	1640H–1641H
DVP-08ST	Switch 0–7	0408H–040FH

Step 3: physical configuration

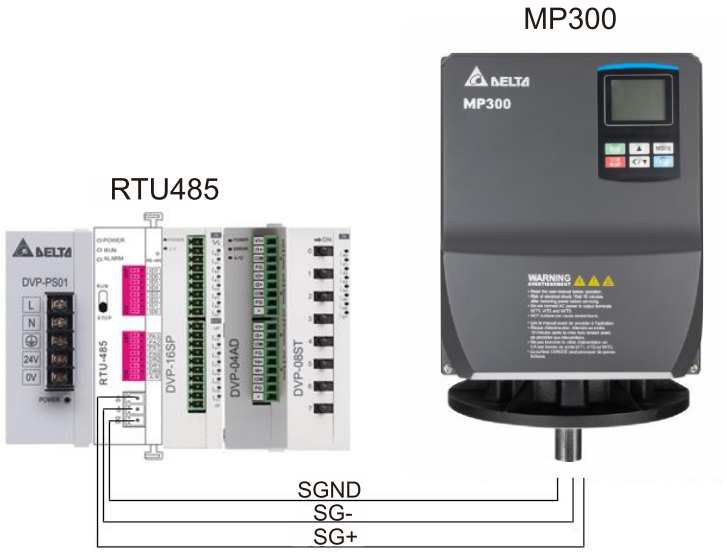

Step 4: write PLC programs

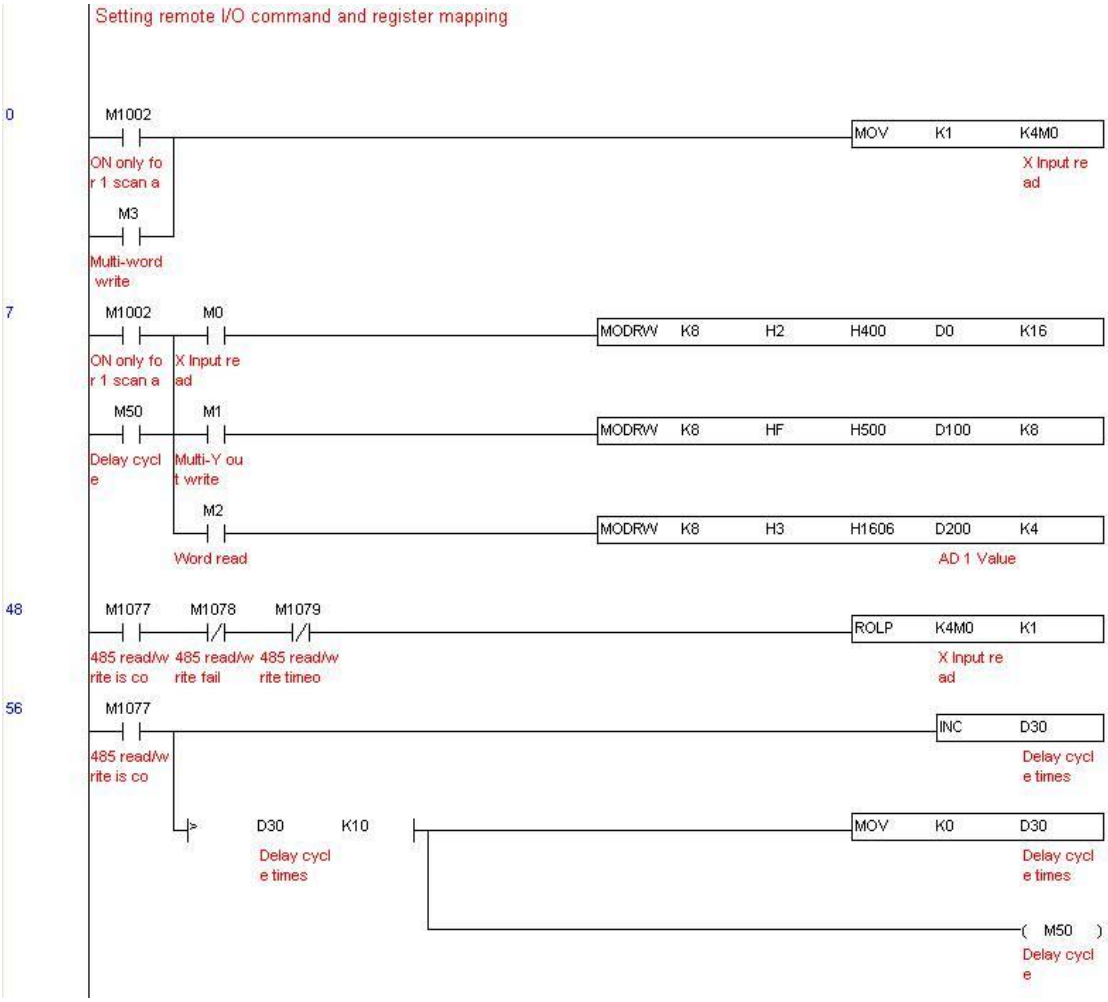

Monitor X input

71 M1000 (Normally open contac) — MOV D0 K4M100 (X0)

77 M115 (Switch 7) M114 (Switch 6) M113 (Switch 5) M112 (Switch 4) M111 (Switch 3) M110 (Switch 2) M109 (Switch 1) M108 (Switch 0) — (M120)

M107 (X7) M106 (X6) M105 (X5) M104 (X4) M103 (X3) M102 (X3) M101 (X1) M100 (X0)

Monitor AD0 ~ AD3 (0 ~ 8000)

95 M1000 (Normally open contac)

- MOV D200 D210 (AD 1 Value)
- MOV D201 D211 (AD 2 Value)
- MOV D202 D212 (AD 3 Value)
- MOV D203 D213 (AD 4 Value)

Control Out Y

116 M1013 (1s clock pulse, 0.5s) — INCP D100

Control DA Value (0 ~ 4000)

120 M1011 (10ms clock pulse, 5m)

- INCP K3M200
- MOV K4M200 D300 (DA 1)
- DECP K3M220
- MOV K4M220 D301 (DA 2)

137 END

Step 5: practical testing situation

I/O test: when the switch is activated, it can be discovered that the display corresponds to M115–M108. Furthermore, it can be seen that one output point light is added every 1 sec. (the display uses a binary format)

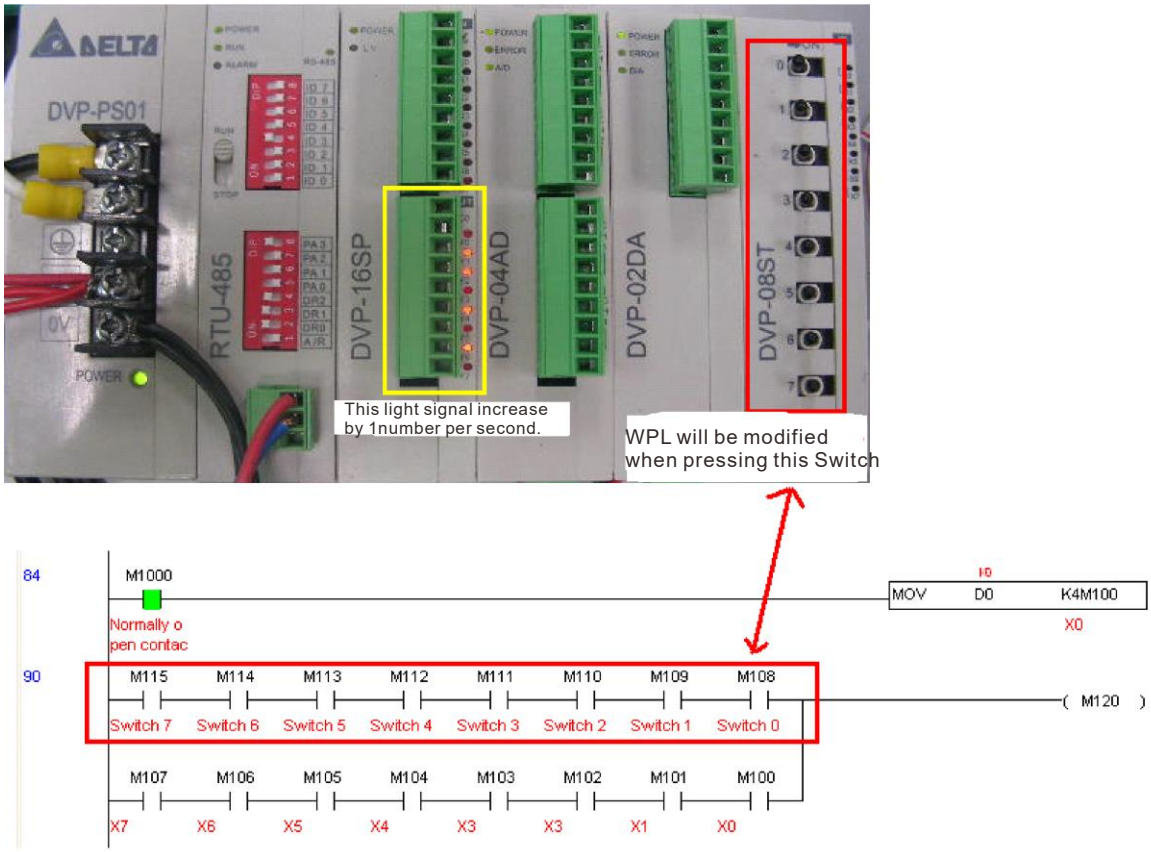

AD / DA test: it can be discovered that D200 and D201 are roughly twice the D300, and continue to increase progressively. For their part, D202 and D203 are roughly twice the D301, and continue to decrease progressively.

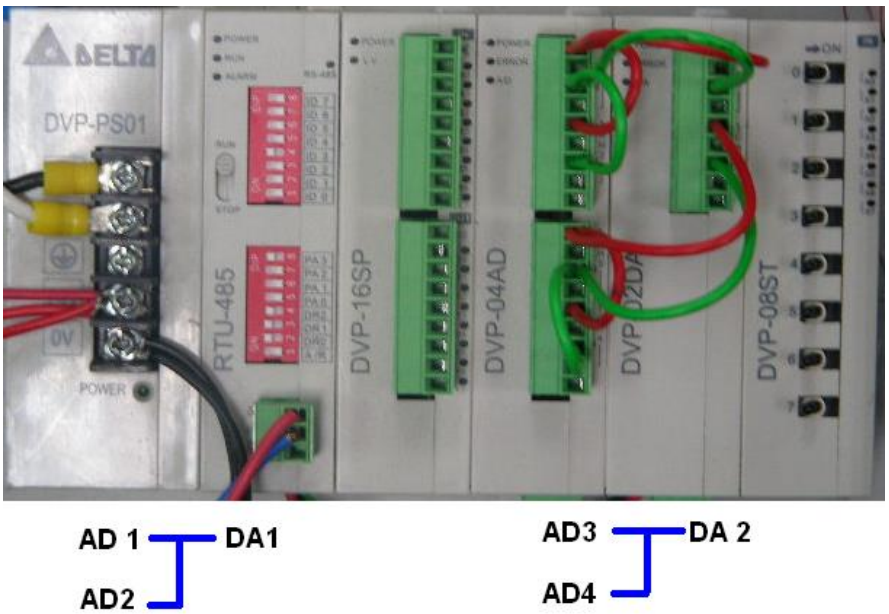

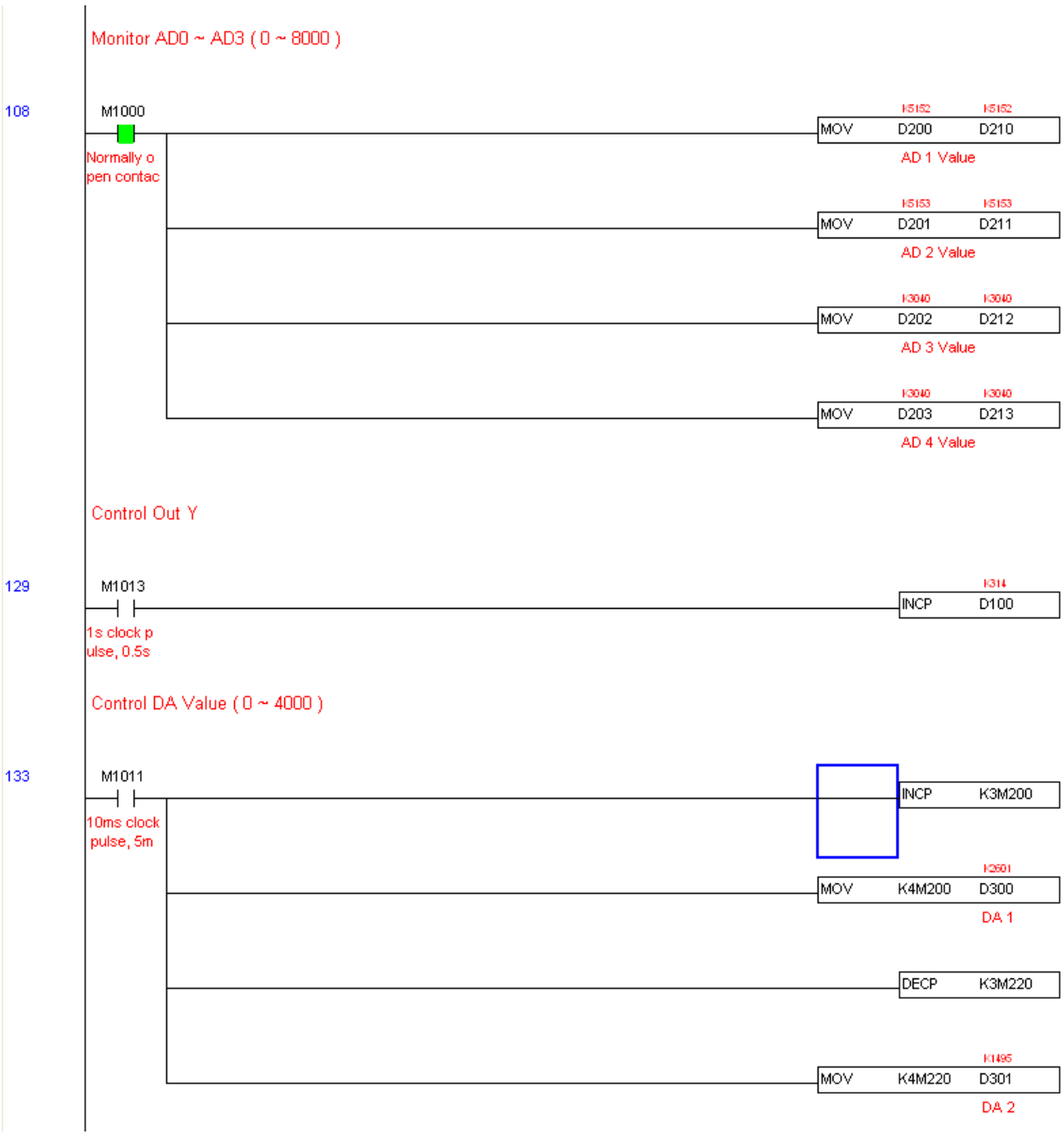
Monitor AD0 ~ AD3 (0 ~ 8000)
108
M1000
Normally o
pen contac
K5152 K5152
MOV D200 D210
AD 1 Value
K5153 K5153
MOV D201 D211
AD 2 Value
K3040 K3040
MOV D202 D212
AD 3 Value
K3040 K3040
MOV D203 D213
AD 4 Value
Control Out Y
129
M1013
1s clock p
ulse, 0.5s
K314
INCP D100
Control DA Value (0 ~ 4000)
133
M1011
10ms clock
pulse, 5m
INCP K3M200
K2601
MOV K4M200 D300
DA 1
DECP K3M220
K1495
MOV K4M220 D301
DA 2

15-10 RTC (real-time clock)

The internal PLC of MP300 contains a real-time clock function. Currently supported commands include TCMP (real-time data comparison), TZCP (zone comparison of real-time data), TADD (real-time data addition), TSUB (real-time data subtraction), and TRD (read real-time data). Refer to the explanation of relevant instructions and functions for the usages.

In practical applications, the internal PLC can judge whether real-time clock function has been activated; if it has been activated, real-time clock warning codes may be displayed in some situations. The activation of the real-time clock function is judged based on whether the above-mentioned real-time clock instructions write in the program, or the program refers to the real-time clock (D1063~D1069).

The time display of the real-time clock is currently planned between D1063~D1069, and its definition is as follows:

Special D	Item	Content	Attribute
D1063	Year (A.D.)	20xx (2000–2099)	RO
D1064	Week	1–7	RO
D1065	Month	1–12	RO
D1066	Day	1–31	RO
D1067	Hour	0–23	RO
D1068	Minute	0–59	RO
D1069	Second	0–59	RO

Real-time clock related special M items are as follows:

Special D	Item	Attribute
M1026	RTC error	RO

*If the program contains TCMP, TZCP, TADD, TSUB instructions, and the value exceeds the reasonable range, then M1026 is one.

Example:

- First, adjust the time of the drive by the time setting in Pr.12-93–Pr.12-96, these settings react to the special D mentioned above.
- Second, write WPLsoft program to set the drive to be ON during the period of 08:00–17:20. See the program below:

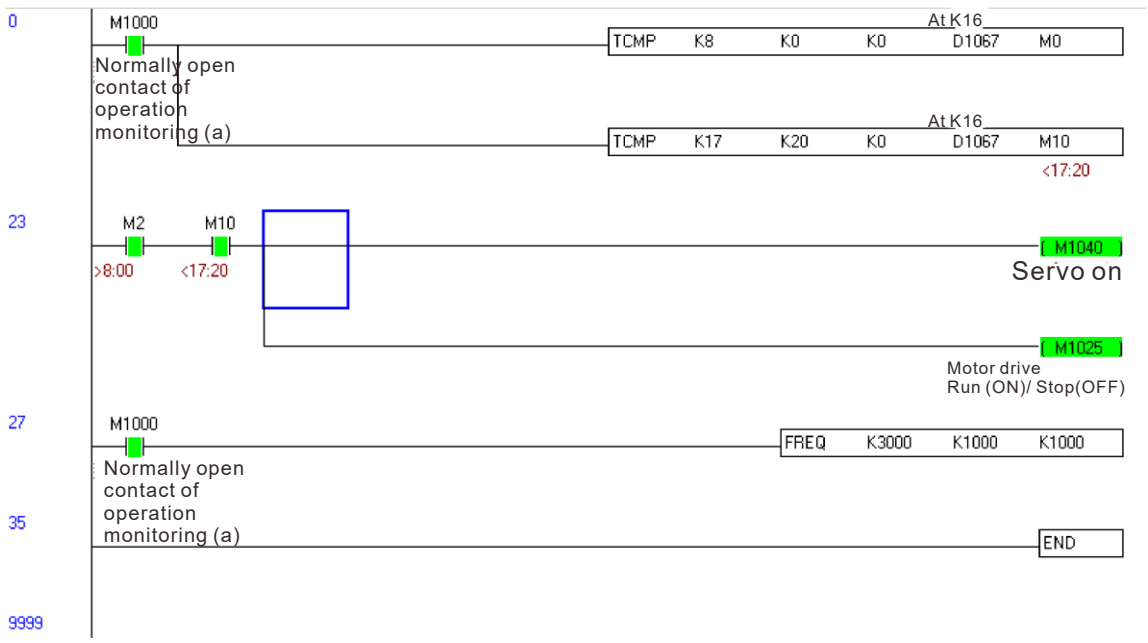

15-11 Enable The Built-in PLC Function of MPD (Scheduled Function, Multi-master Function)

MPD supports built-in PLC function for users to write programs according to user requirements. And also supports built-in PLC water pump function (scheduled function and multi-master function). Follow the instructions below to enable the built-in PLC function for using the related functions.

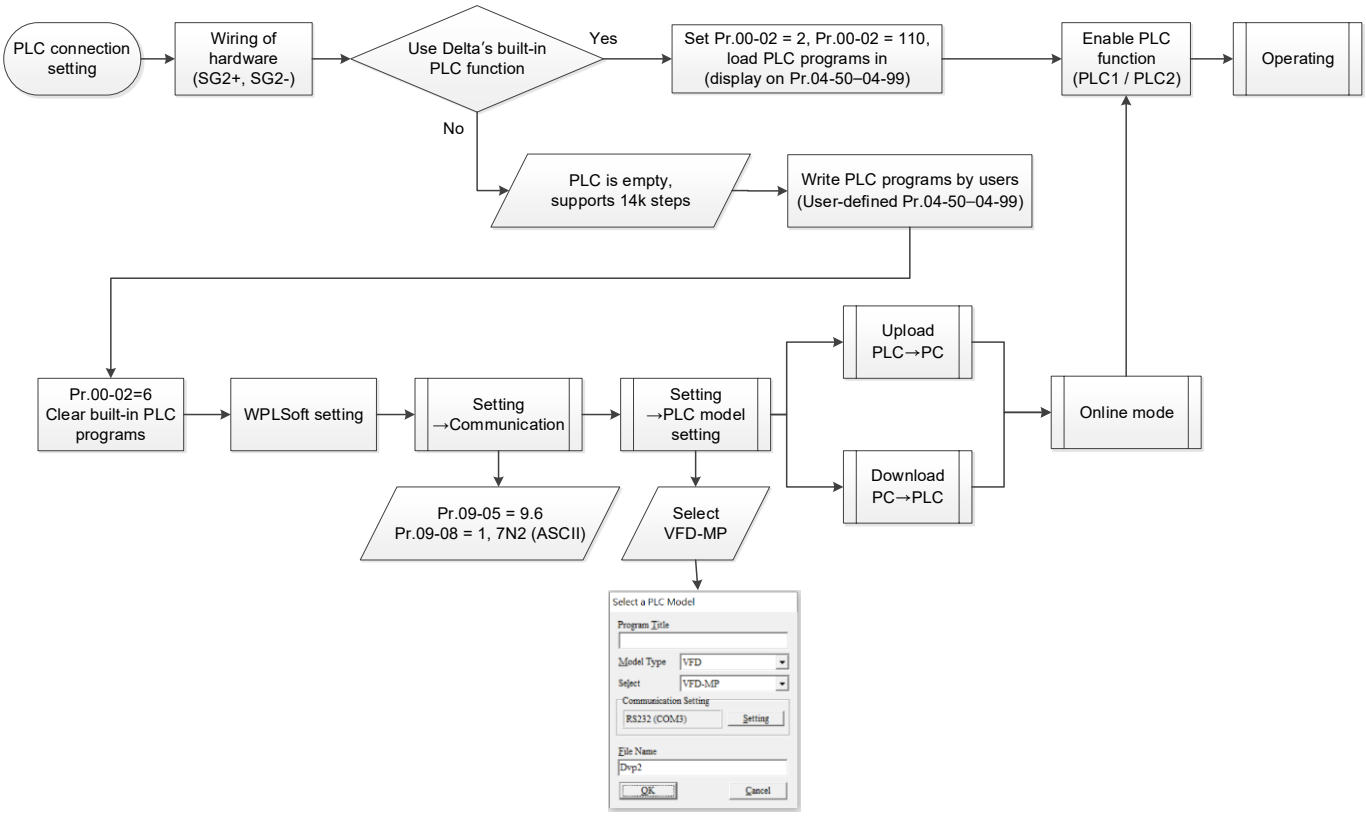

15-11-1 Scheduled function

To meet water requirements at different time, use this scheduled function to arrange the target pressure in the specific time interval for saving energy. After enabling the built-in PLC function, Pr.04-58–04-99 are displayed as the parameters of the scheduled function. Refer to the instructions of group 04 in chapter 12 for more details.

15-11-2 Multi-master station function

The common multi-pump system can automatically add / reduce pumps according to water requirements, increase water-use efficiency. To keep the system stability and no water outage, use the redundancy of AC motor drive and pressure sensor that based on PLC's multi-master function to make the backup pump operates automatically when breakdown, power failure, disconnection occurs. By doing so, increase the pump's reliability, decrease the risk of water outage.

The multi-pump system with built-in PLC function use COM1 as communication interface, the communication format is fixed, the station address of the master is 1, and supports eight pumps. To provide convenience for users, the whole system stops when pressing STOP to the master, and starts to operate again after pressing RUN. Set Pr.00-32 = 1, press STOP to the slave to make it separate from multi-pump system for maintaining conveniently. At the same time, the slave displays a FSTP fault as a reminder. After finishing the maintenance, connect the slave back to the system and press STOP again, reset for FSTP, and the slave starts to operate while connecting with multi-pump system automatically.

About the display of warnings, only the master can display the warnings when there is any pressure deviation related warnings (high / low water pressure, heavy water leakage) occur in the multi-pump system. Other else warnings (dry pump, clean, cavitation) give warnings according to each parameter setting. If systematic faults [high water pressure (HPS), low water pressure (LPS), heavy water leakage (LEKE)], RTC error (rtf) occur or when the scheduled function is ON, ensure for the safety, low battery voltage (LBAt), adjust RTC (rCAL), force to stop (FStop) make the whole system stop in the first second of powering ON .

When using multi-master function, load the built-in PLC function of all MPD (master, slave) in the system in, switch ON and set the range of the pressure sensor (Pr.00-25, Pr.00-26), station address (Pr.09-00), pump system configuration setting (Pr.04-57), refer to the section 12-2 for more details about parameters and the setting procedures. For taking over the master, the wiring of hardware and the function parameters of backup master should be the same as the master. Refer to the section 4-4 Wiring Of Multi-pump Communication Cables and section 4-5 Wiring Of Pressure Sensor for more details about the wiring of hardware.

Station definitions of the built-in PLC function

Communication master	Slave	Absolute master	Backup master
The station to send commands (Display M on LCD)	Relative communication master The station to receive commands	Station address1, and is definitely the communication master	The other station addresses that Pr.04-57 bit8 = 1

The conditions to be master, backup master, slave:

Conditions for setting		Absolute master	Backup master	Slave
Essential setting	Enable / disable built-in PLC function	Enable (PLC1)	Enable (PLC1)	Enable (PLC1)
	Setting of CANopen station address (Pr.09-00)	1	2–8 (cannot set doubly)	1–8 (cannot set doubly)
	Setting of backup master (Pr.04-57)	-	A. Backup master is ON / OFF: bit 8 = 1 B. Warning of switching backup master to master PL00 is ON / OFF: set bit 9 according to requirement	-
	User defined (Pr.00-26) (Pr.00-39)	Should be set the same	Should be set the same	Should be set the same
	Differential pressure control (Pr.08-57)	Should be set the same	Should be set the same	Should be set the same
	Reducing pump setting (Pr.12-00) (Pr.12-01) (Pr.12-10)	Should be set the same	Should be set the same	-

Conditions for setting		Absolute master	Backup master	Slave
Other conditions	Communication setting (Pr.09-31)	-12 (auto-setting)	0 (auto-setting) NOTE: the setting changes to -12 automatically after changing to be master station	0 (auto-setting)
	Malfunction, ANL occurs in master (Except FSTP, LVS)	If a malfunction occurs, then the absolute master changes to be slave, and the communication master transfers to another station address.	If a malfunction occurs, then this cannot be communication master.	-
	Others	Can not have other communication masters in communication	Can not be master if there is another communication master	-

NOTE: The mark " - " means it does not refer to the parameter setting.

Take notice of this, when built-in PLC function is ON, the parameters listed below are set automatically or affect the function listed below. Switch to normal multi-pump mode when built-in PLC function is OFF, and remember to adjust the parameters listed below to prevent multi-pump function from being invalid.

Parameter setting	Disable PLC	Enable PLC (for multi-master)	Enable PLC and then disable it
PID mode (Pr.08-00)	-	0: Disabled	-
Internal communication protocol (Pr.09-31)	-	Master: -12 Slave: 0	-
Communication address (Pr.09-00)	-	1–8	-
Communication speed of COM1 (Pr.09-01)	-	115.2	-
Communication format of COM1 (Pr.09-04)	-	14: 8E1 (RTU)	12: 8N1 (RTU)
Treatment of pump's fault (Pr.12-13)	-	5	-
MI1	-	MI1 is not regulated by Pr.02-00. If Pr.04-57 bit 0 = 1, MI1 fixes the mode that bit 0 = 1 (RUN) and bit 0 = 0 (STOP)	-
Signal loss selection for the AI1 4–20 mA (Pr.03-19)	-	Pr.03-19 cannot be 2. But if Pr.03-19 = 2 originally, then the value changes to be 3 automatically.	-

NOTE: The mark " - " means does not do any other setting, but maintain parameter's last status.

If offline communication, power failure, breakdown, or offline pressure sensor occurs, then the communication master becomes slave, and the communication master transfer to another station address.

A. The communication is offline / online:

a. When the communication is offline, the backup master in the communication block without communication master automatically becomes the communication master. The smaller the ID is, the easier it becomes communication master.

b. If the slave detects that it's not controlled by communication master, then the operation is according to Pr.12-12 (pump's frequency at time-out) and continues till the communication is online.

c. After the communication is online, the absolute master re-controls the system (becomes communication master). If there is no absolute master, then the smaller the ID of backup master is, the easier it controls system. And it continues operating by the previous state.

In the system, ID1 is the absolute master, ID2 / ID3 are backup masters, ID4 is the slave.

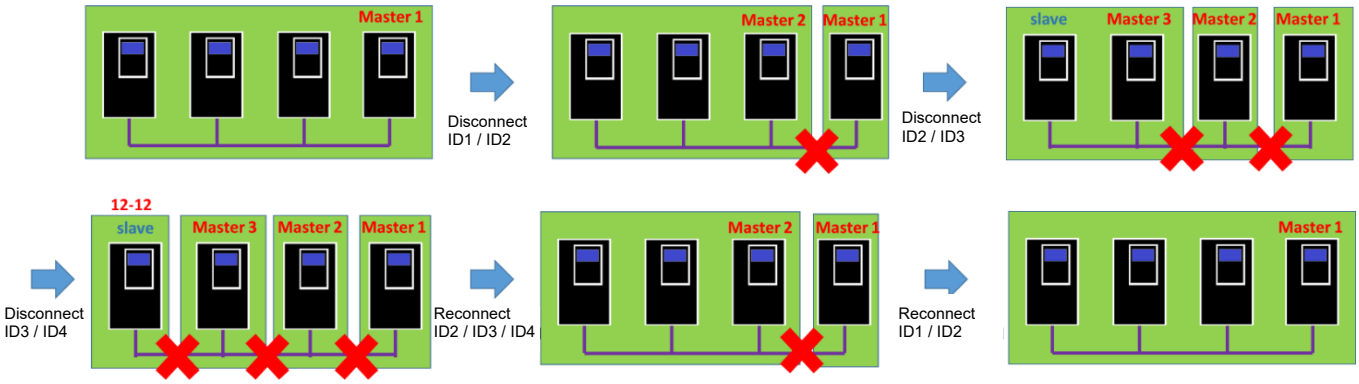

B. Power failure, breakdown / restore power, reset:

a. If the original communication master has power failure or breakdown, the backup master becomes communication master. The smaller the ID is, the easier it becomes communication master.

b. When the original communication master is back to normal (after reset or re-power on), if this is absolute master, then it becomes communication master again; if this is backup master, then it keeps the slave's state.

In the system, ID1 is the absolute master, ID2 / ID3 are backup masters, ID4 is the slave.

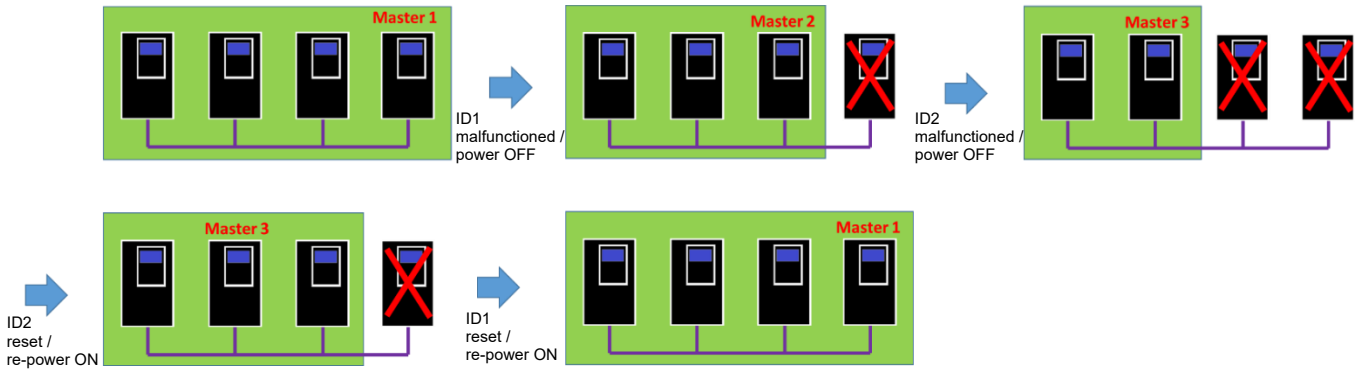

C. The pressure sensor is off-line / online:

a. When the absolute master loses the signal of pressure sensor, it cannot be communication master, but the backup master can be. The smaller the ID of backup master is, the easier it becomes communication master.

b. If the communication master loses the signal of pressure sensor, then it operates according to Pr.03-19 (signal loss selection for AI1 analog input 4–20 mA); if there is no communication master, then the slave operates according to Pr.12-12 till the communication master appears.

Pr.	Descriptions	Setting range of AC motor drive	Setting range of the enabled built-in PLC function
03-19	Signal loss selection for the AI1 4–20 mA	0: Disabled 1: Continue operation at the last frequency 2: Decelerate to 0 Hz 3: Stop immediately and display ACE	0: No warning 1: Occurs a ANL warning and operates according to the command from communication master. If there is no communication master, then it operates according to Pr.12-12. 2: Disabled 3: Occur an ACE fault to stop and withdraws from multi-pump system

In the system, ID1 is the absolute master, ID2 / ID3 are backup masters, ID4 is the slave.

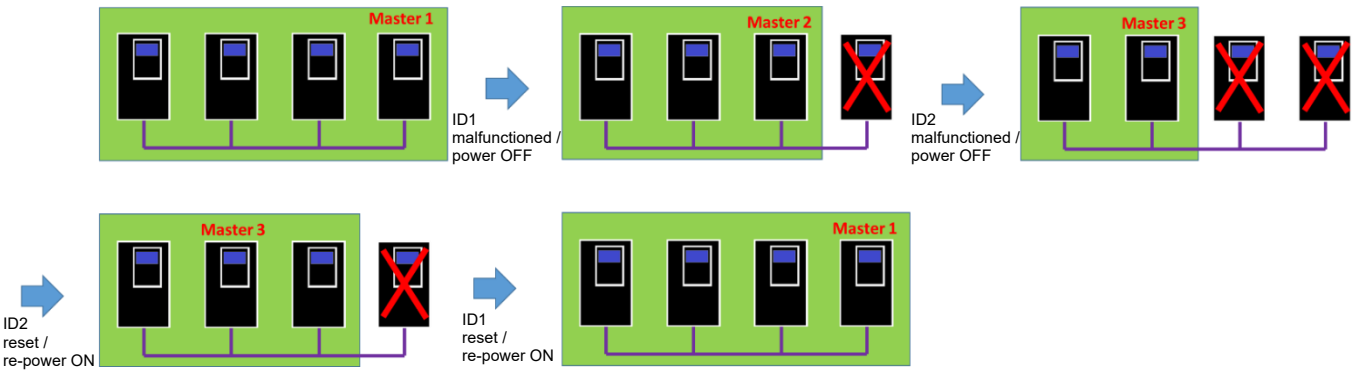

In the system, ID1 is the absolute master, ID2 is the backup master, ID3 / ID4 are the slaves (Pr.03-19 ≠ 0)

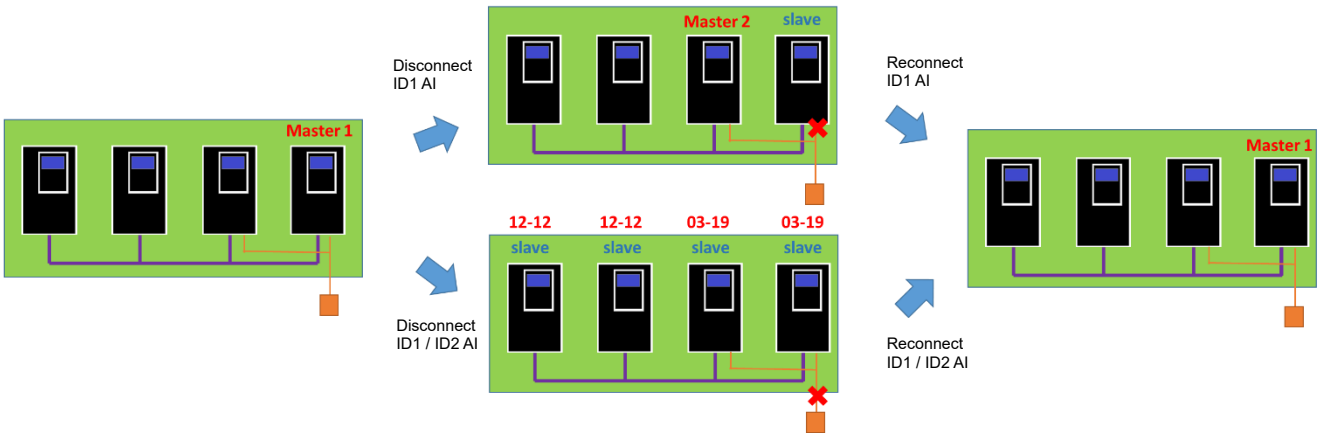

c. When the original communication master receives the signal of pressure sensor again, if this is absolute master, then it becomes communication master again; if this is backup master, then it keeps the slave's state.

In the system, ID1 is the absolute master, ID2 / ID3 / ID4 are the backup masters (Pr.03-19 ≠ 0)

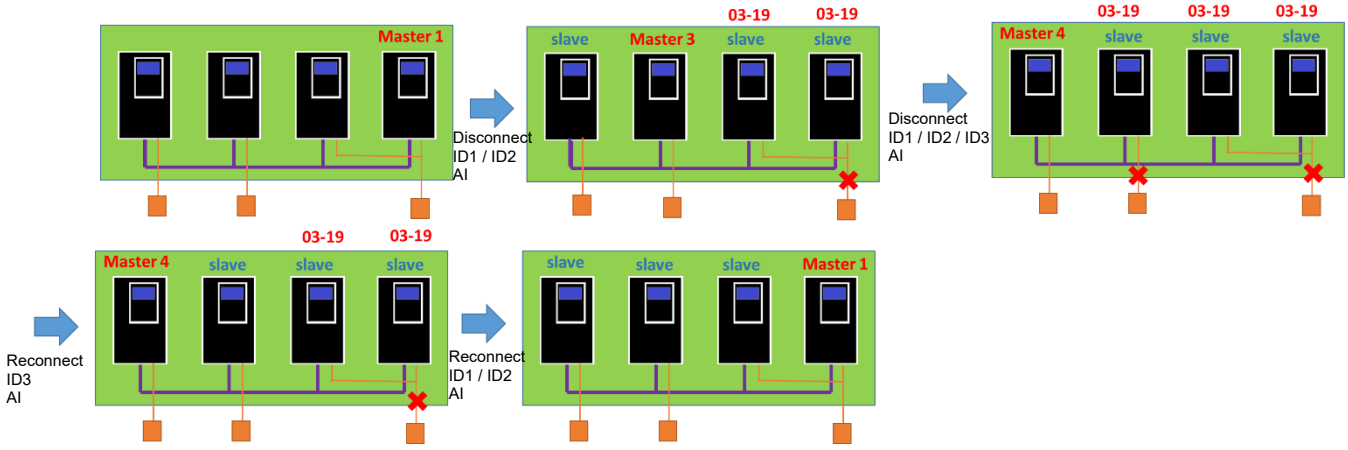

The special D mentioned below is the settings for PID, you can use Pr.08-01–08-03 to set it synchronously.

N = 1–8

Special D	Function	Settings	R/W *
D1195 + 20N	P value of PIN N (two decimal places)	Pr.08-01	RW
D1196 + 20N	I value of PID1 (two decimal places)	Pr.08-02	RW
D1197 + 20N	D value of PID1 (two decimal places)	Pr.08-03	RW

15-12 Function Block Diagram (FBD) --- for DIADesigner

MPD provides built-in multiple master stations and scheduled function blocks. You can import function blocks via the software called DIADesigner to perform these functions, and you can also add other programs, but this don't affect the original built-in functions.

Note: For information related to DIADesigner software, please click on the link: DIAStudio Downloads or scan the QR code on the upper right.

15-12-1 MPD PLC multiple master station function block

15-12-1-1 Features

A. Introduction to functions

a-1 Multi-master station function

- Master station: the function block can be set as a master station. When set as a master station, the LCD displays M.
- Slave station: the function block can be set as a slave station. When set as a slave station, the LCD displays the current setting value of Pr.09-00.
- Backup master station: set the slave station as a backup master station, and this backup master station will become the master station automatically if the original master station fails or lose the connection with the original master station.
- The definitions of these stations are as follows:

Communication master station	Slave station	Absolute master station	Backup master station
The station to send commands (Display M on LCD)	The station to receive commands	Station number 1 (Pr.09-00 = 1), and is definitely the communication master station if there is no errors.	Any other stations that Pr.04-57 bit8 = 1

a-2 Multi-pump controlling function

- Add / reduce pumps: the order of adding / reducing pumps follows Pr.12-14 setting: Pr.12-14 = 0, according to the serial numbers of the pumps; Pr.12-14 = 1, according to the operating time.
- Auto-change pumps: set Pr.12-50, and set the corresponding time parameters (Pr.12-51, 12-52). If Pr.12-50 = 1 (absolute time), when the RTC (Pr.12-95, 12-96) reaches the setting (Pr.12-51), then auto-change pumps has been triggered. If Pr.12-50 = 2 (fixed time), when the accumulated time reaches the setting (Pr.12-52), then auto-change pumps is been triggered.

a-3 Bluetooth function

- When the communication master station is connected to an external Bluetooth communication card, it can capture the data of each slave station and send the data to the APP through the Bluetooth card.
- Users can read the information of each station through Bluetooth APP.

15-12-1-2 Introduction to function block diagram (FBD)

A. Interface of function block diagram (FBD)

The following table introduces the function block interface, includes input and output pins.

FB/FC	FB Name	Graphic Expression
FB	DFB_MPD_MultiStationSystem	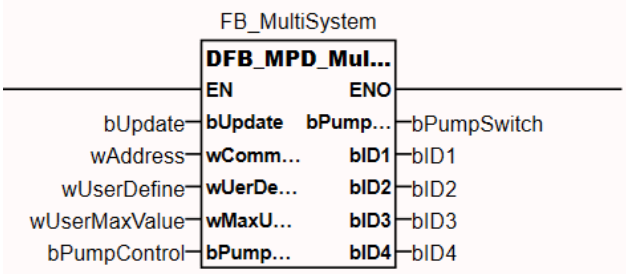

B. Input pins

The following table explains the functions of input pins:

Name	Function	Data type	Setting value (Default value)	Note
bUpdate	Update parameters	BOOL	False / True (False)	Update parameters as follows when bUpdate = True
wAddress	Communication address	Word	N/A	Write in Pr.09-00 when bUpdate = True
wUserDefine	User-defined characteristics	Word	N/A	Write in Pr.00-25 when bUpdate = True
wUserMaxValue	Maximum user-defined value	Word	N/A	Write in Pr.00-26 when bUpdate = True
bPumpControl	External control outputs	BOOL	False / True (False)	When bPumpControl = True, the outputs of pumps are controlled by the external programs, and add / reduce pumps according to the station number (Pr.12-14 = 0).

C. Output pins

The following table explains the functions of output pins:

Name	Function	Data type	Output range (Default value)
bPumpSwitch	Display the pumps start	BOOL	False / True (False)
bID1	Display the first station is online	BOOL	False / True (False)
bID2	Display the second station is online	BOOL	False / True (False)
bID3	Display the third station is online	BOOL	False / True (False)
bID4	Display the fourth station is online	BOOL	False / True (False)

15-12-1-3 Operation instruction

A. Operating procedures

a-1 Import MPD PLC function block

Step 1. Click “Library Manager”

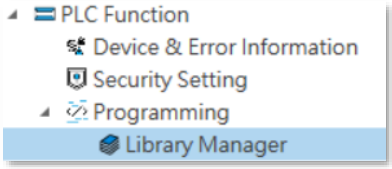

Step 2. Click “Library Repository”

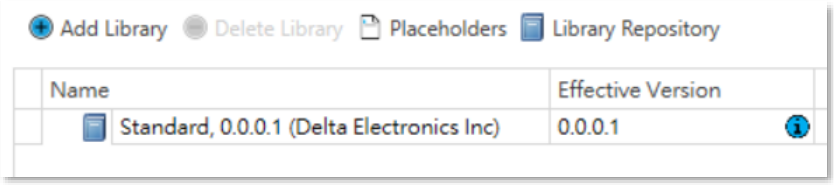

Step 3. At this moment, a dialog appears the installed libraries, click “Install”

Step 4. Select MPD PLC Library to import

Step 5. Click “Add Library”

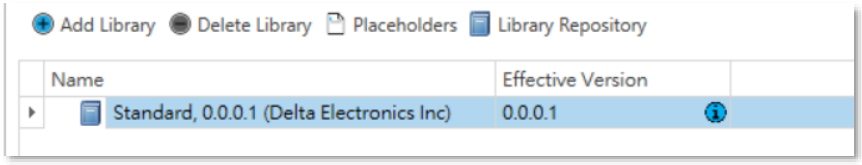

a-2 Set RTC time before using the scheduled function block (Pr.12-93–12-96)

a-3 Drag and drop the function block to PLC program as shown below.

Drag the function block from the left project tree, and drop in PLC program.

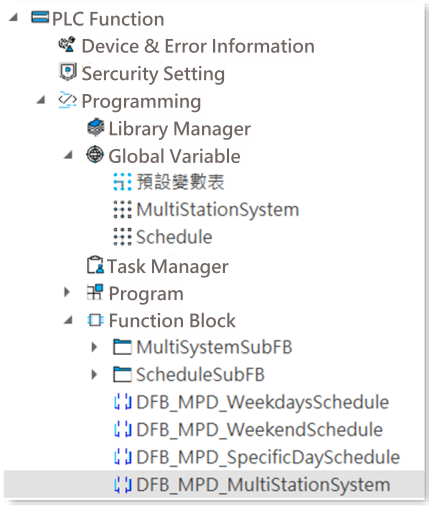

B. Multi-master station function

b-1 Set communication master station

- Set communication address Pr.09-00 = 1, it can also been set by using function block. For example, after performing wAddress = 1, it becomes communication master station, and M shows on the LCD.
- After setting the communication master station, the function block will display the online status of each station. For example, bID1 = True, this means the master stations is online. Through the function block output pin, you can know the current online status of each slave station.

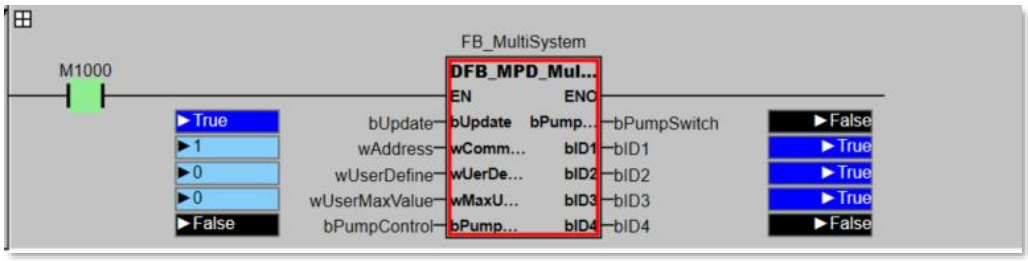

b-2 Set slave station

Set communication address Pr.09-00 = 2–4, this becomes slave station after performing, and LCD shows the setting value of Pr.09-00.

b-3 Set backup master station

Set Pr.04-57 bit8 = 1 for slave station, and this becomes backup master station.

C. Multi-pump controlling function

c-1 Add / reduce pumps

Step 1. Set Pr.12-14 (selection of pump start-up sequence), to select the way to add / reduce pumps.

Step 2. Set Pr.12-00 (set point deviation level) and Pr.12-01 (detection time of set point deviation level).

Step 3. Set Pr.12-02 (offset level of low water consumption)

Step 4. Press RUN button of the master station keypad. If the current water pressure is less than the low water consumption level, then add pumps in sequence.

Step 5. When the target pressure is reached, pumps reduce sequentially.

c-2 Auto-change pumps

Step 1. Set the type of cycle time

1: absolute time, refer to Pr.12-51

2: fixed time, refer to Pr.12-52

Step 2. The auto-change pumps setting refer to the follows

12-50 Cycle Time Selection

Default: 2

Settings	0: Disabled
	1: Absolute time
	2: Fixed time

12-51 Multi-pump's Real Time Circulation Period

Default: 00:00

Settings 00:00–23:59

12-52 Multi-pump's Fixed Time Circulation Period

Default: 5.0

Settings 0.0–3000.0 hours

- This parameter is valid for master pump.
- Set cycle time in Pr.12-50, master pump and slave pump switches when the absolute time is equal to Pr.12-51 or the operation time of master pump is larger than Pr.12-52.
- If Pr.12-50 = 1, adjust RTC in Pr.12-93–12-96 before setting this parameter.

15-12-2 MPD PLC scheduled function block

15-12-2-1 Features

A. Introduction to functions

a-1 The rules of each time interval and target pressure

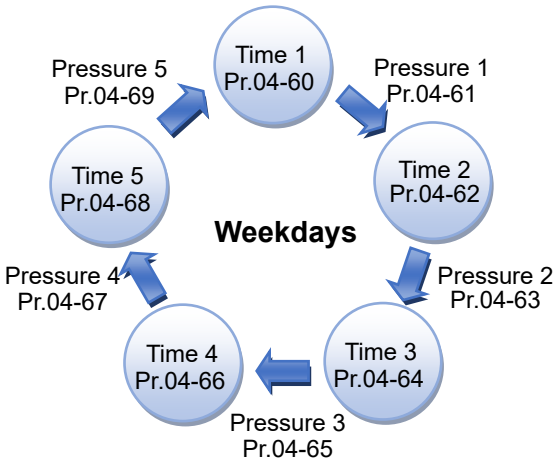

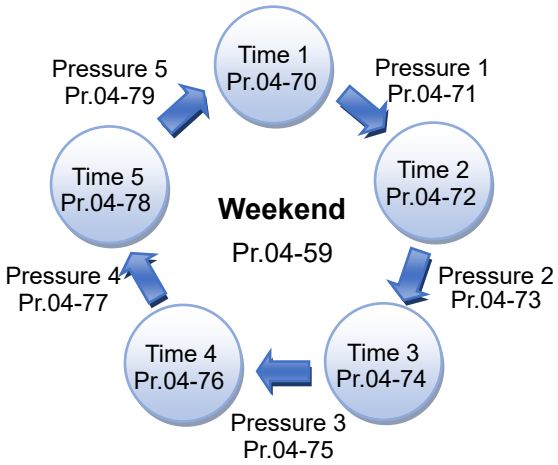

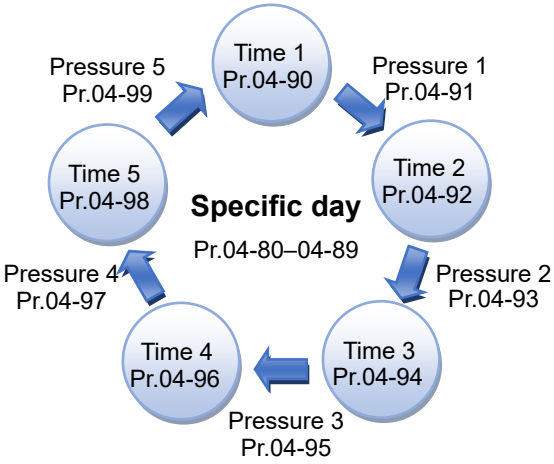

a-2 Specific day schedule

- To perform the target pressure for the time interval of the specific day
- The specific day is the date specified by user

a-3 Weekend schedule

- To perform the target pressure for the time interval of weekends
- Use Pr.04-59 to define the weekends, which are Saturdays and Sundays or is just Sundays.

a-4 Weekday schedule

- Weekday schedule means that the days except specific days and weekends.
- Weekday schedule just needs to specify time interval.

a-5 The priority to perform target pressure:

- In the same time interval, specific day > weekend > weekday

15-12-2-2 Introduction to function block diagram (FBD)

b. The scheduled function block is divided into: weekday scheduled function block, weekend scheduled function block, and specific day scheduled function block.

b-1 Introduction to weekday scheduled function block

The following table introduces the function block interface of weekday schedule, includes descriptions of input and output pins, and default.

FB/FC	FB Name	Graphic Expression
FB	DFB_MPD_WeekdaysSchedule	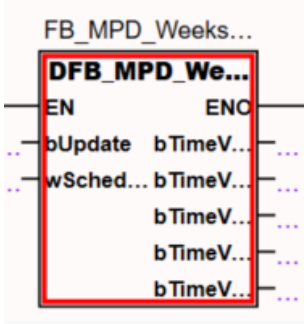

Input pins

Name	Function	Data type	Setting value (Default value)	Note
bUpdate	Update parameters	BOOL	False / True (False)	Update parameters as follows when bUpdate = True
wSchedule	Schedule setting	Word	N/A	Write in Pr.04-58 when bUpdate = True

Output pins

Name	Function	Data type	Output range (Default value)
bTimeValid1	Time interval 1 is valid	BOOL	False / True (False)
bTimeValid2	Time interval 2 is valid	BOOL	False / True (False)
bTimeValid3	Time interval 3 is valid	BOOL	False / True (False)
bTimeValid4	Time interval 4 is valid	BOOL	False / True (False)
bTimeValid5	Time interval 5 is valid	BOOL	False / True (False)

b-2 Introduction to weekend scheduled function block

The following table introduces the function block interface of weekend schedule, includes descriptions of input and output pins, and default.

FB/FC	FB Name	Graphic Expression
FB	DFB_MPD_WeekendSchedule	

Input pins

Name	Function	Data type	Setting value (Default value)	Note
bUpdate	Update parameters	BOOL	False / True (False)	Update parameters as follows when bUpdate = True
wSchedule	Schedule setting	Word	N/A	Write in Pr.04-58 when bUpdate = True
wWeekendSetting	Weekend setting	Word	N/A	Write in Pr.04-59 when bUpdate = True, refer to Pr.04-59 for the setting

Parameter setting

04-58 Weekdays, weekend, specific day schedule

Default: 0

Settings bit 0: 1 (weekdays)
bit 1: 1 (weekend)
bit 2: 1 (specific day)

04-59 Weekend Setting

Default: 0

Settings 0: Saturday, Sunday
1: Sunday

Output pins

Name	Function	Data type	Output range (Default value)
bTimeValid1	Time interval 1 is valid	BOOL	False / True (False)
bTimeValid2	Time interval 2 is valid	BOOL	False / True (False)
bTimeValid3	Time interval 3 is valid	BOOL	False / True (False)
bTimeValid4	Time interval 4 is valid	BOOL	False / True (False)
bTimeValid5	Time interval 5 is valid	BOOL	False / True (False)

b-3 Introduction to specific day scheduled function block

The following table introduces the function block interface of specific day schedule, includes descriptions of input and output pins, and default.

FB/FC	FB Name	Graphic Expression
FB	DFB_MPD_WeekendSchedule	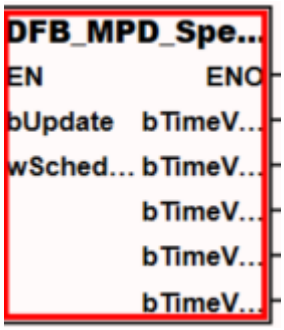

Input pins

	Function	Data type	Setting value (Default value)	Note
bUpdate	Update parameters	BOOL	False / True (False)	Update parameters as follows when bUpdate = True
wSchedule	Schedule setting	Word	N/A	Write in Pr.04-58 when bUpdate = True

Output pins

Name	Function	Data type	Output range (Default value)
bTimeValid1	Time interval 1 is valid	BOOL	False / True (False)
bTimeValid2	Time interval 2 is valid	BOOL	False / True (False)
bTimeValid3	Time interval 3 is valid	BOOL	False / True (False)
bTimeValid4	Time interval 4 is valid	BOOL	False / True (False)
bTimeValid5	Time interval 5 is valid	BOOL	False / True (False)

15-12-2-3 Operation instruction of function block

A. Import function block

a-1 Import MPD PLC function block

Step 1. Click “Library Manager”

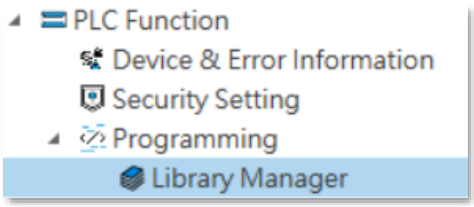

Step 2. Click “Library Repository”

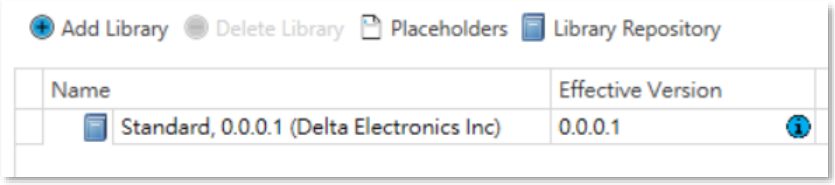

Step 3. At this moment, a dialog appears the installed libraries, click “Install”

Step 4. Select MPD PLC Library to import

Step 5. Click “Add Library”

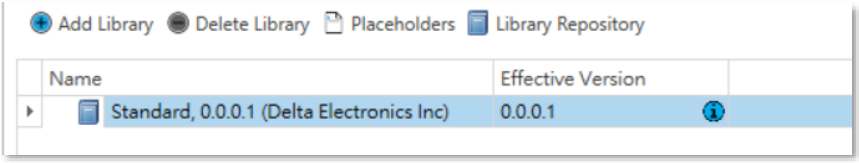

a-2 Set RTC time before using the scheduled function block (Pr.12-93–12-96)

a-3 Drag and drop the function block to PLC program as shown below.

Drag the function block from the left project tree, and drop in PLC program.

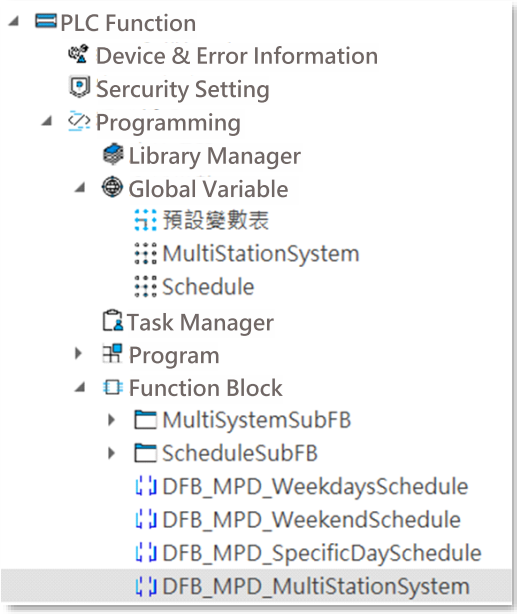

a-4 The scheduled function block needs to be used with the multiple master function block. Please confirm that the multiple master function block has been imported, as shown below.

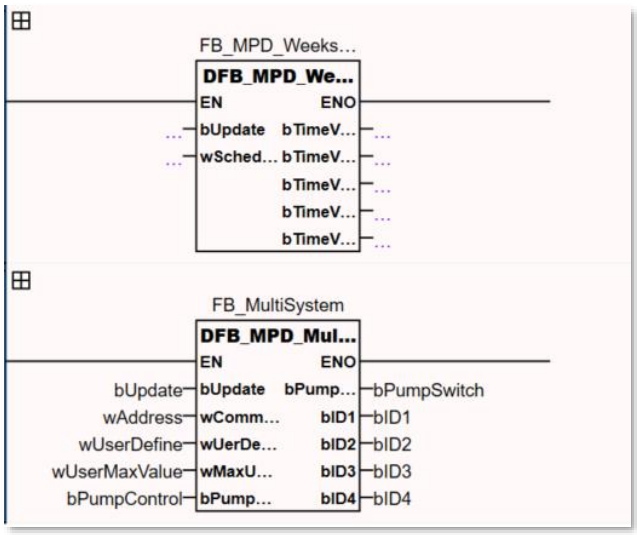

a-5 If you want to use all scheduled functions, then import the entire of them to PLC program, as shown below.

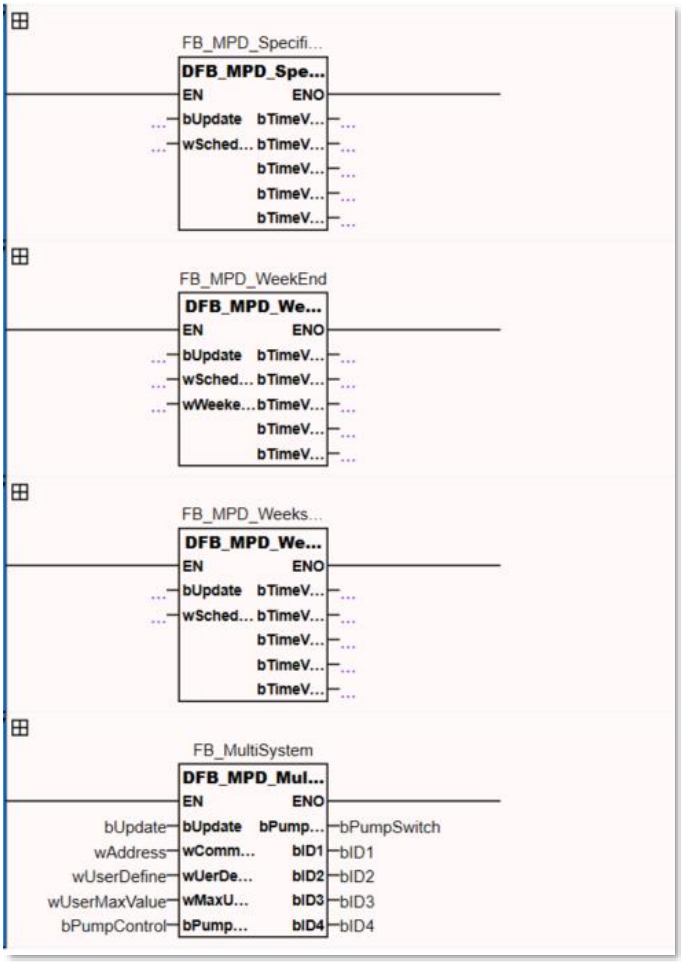

B. Weekday schedule

b-1 Set Pr.04-58 = 1, or use function block to set wSchedule = 1.

b-2 Set Pr.04-60–04-69.

b-3 Start the function block, the performing status is as shown below

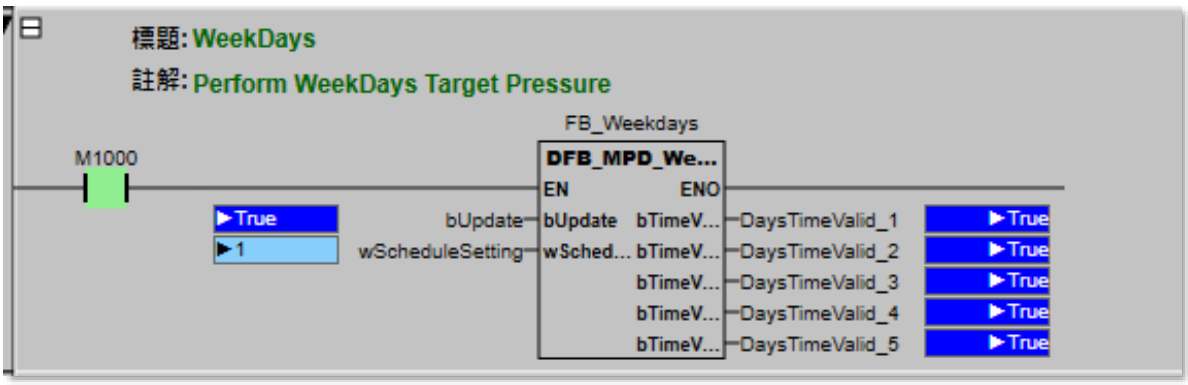

C. Weekend schedule

c-1 Set Pr.04-58 = 2, or use function block to set wSchedule = 2.

c-2 Set Pr.04-59 = 0 or 1, or use function block to set wWeekenSetting = 2

c-3 Set Pr.04-70–04-79.

c-4 Start the function block, the performing status is as shown below

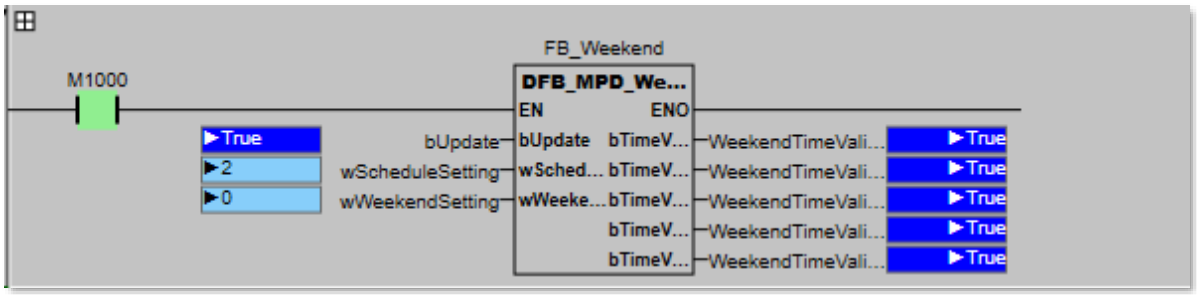

D. Specific day schedule

d-1 Set Pr.04-58 = 4, or use function block to set wSchedule = 4.

d-2 Set Pr.04-80–04-99.

d-3 Start the function block, the performing status is as shown below

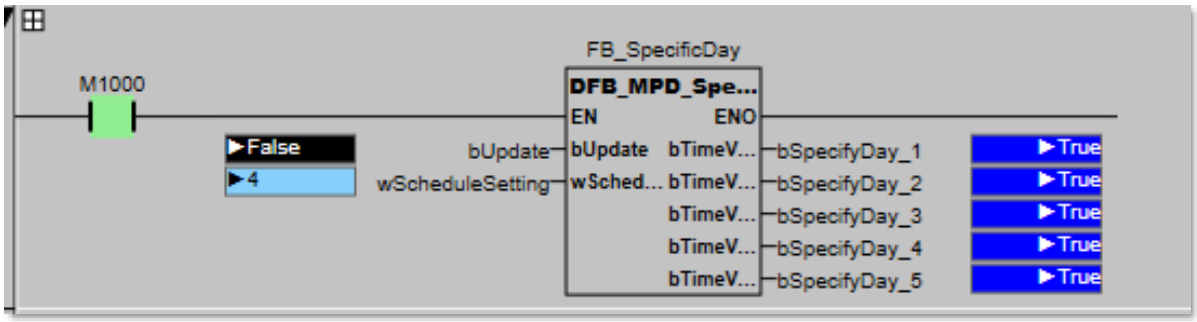

Chapter 16 BACnet Instructions

16-1 Introduction to BACnet and the Steps

16-1 Introduction to BACnet and the Steps

16-1-1 Specifications of BACnet

Item		Content
Interface		RS-485
Type of synchronization		Asynchronous
Communication parameters	Serial transfer rate	9.6, 19.2, 38.4 Kbps
	Data bits	8-bit
	Parity	None (N)
	Stop bit	1-bit
Communication protocol		RTU

16-1-2 About BACnet:

BACnet is an ASHRAE communication protocol for **b**uilding **a**utomation and **c**ontrol **net**works. (ASHRAE: **A**merican **S**ociety of **H**eating, **R**efrigerating and Air-Conditioning **E**ngineers, Inc.). MP300's BACnet is based on version 2004.

BACnet's regulations are related to several kinds of physical layers' interfaces. The physical layer built inside MP300 is achieved via MS/TP interface.

The BACnet of MP300 supports a device type called B-ASC. B-ASC supports six types of services such as DS-RP-B, DS-RPM-B, DS-WP-B, DM-DDB-B, DM-DOB-B and DM-DCC-B.

16-1-3 Cable Configuration

For the communication interface and wring are as the following descriptions and figure: Pay special attention to this, when Pr.09-32 is 1, only COM2 interface supports BACnet communication. When BACnet function is enabled, COM2 port will be controlled by BACnet to transmit and receive data. In other words, COM2 port will not be able to support Modbus, DIADesigner for communication.

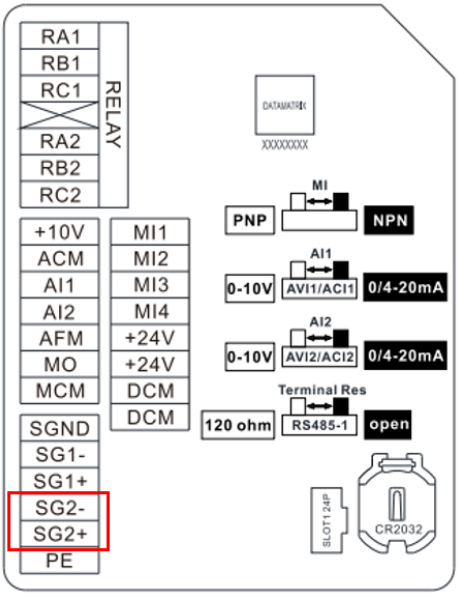

16-1-4 Parameter Setting for BACnet

To use MP300's BACnet, we have two parts of parameters to set.

Part 1. Set communication parameters in the parameter group 9.

Part 2. Set system parameters in the parameter group 0.

Part 1. Set communication parameters in the parameter group 9

1. Set Pr.09-32 = 1 to define the communication interface of COM2 is BACnet (Please note that when BACnet function is enabled, Modbus, DIADesigner cannot be used on the COM2 port). After the setting, the communication format is fixed to RTU 8, N, 1, and will not consider the setting of Pr.09-04.
2. Set Pr.09-05 to define the communication speed of BACnet. It supports three kinds of speed which are 9600, 19200, 38400, and the default is 38400.
3. Set Pr.09-45 to define MS/TP station number of BACnet is 0–127, and the default is 10.
4. Set Pr.09-46 to define searching range of station numbers, the default is 127.
5. Set Pr.09-47 for Device Object_Identifier (Device Instance), the default is 55.
6. Set Pr.09-48 if you want to use password to lock and control, the default is 0.

Part 2. Set system parameters in the parameter group 0

1. Set Pr.00-20 = 1, it means the frequency source is from RS-485.
2. Set Pr.00-21 = 2, it means the control source is from RS-485.

Application:

After setting the parameters of those two parts through the above steps, we have enabled MP300's BACnet function. Therefore, we can control MP300's run and stop, or get the running status through BACnet's objects.

Step1. Use write service to change Present_Value of AV_000 (Frequency command) to be 60.0 Hz.

Step2. Use write service to change Present_Value of BV_000 (Active CMD) to be Active.

Step3. Use read service to retrieve Present_Value of AV_050 (Output frequency).

NOTE: In the application of MP300, we can make the frequency command refer to different sources through different parameter settings or digital terminal settings. To understand more rules about reference sources, refer to the instructions of keypad, parameters, and digital terminals.

16-1-5 Objects and Properties of MP300

MP300's BACnet supports 3 types of objects: Device, Analog Value (AV) and Binary Value (BV). We use the following table to describe that the properties supported by each of these objects.

Property Numbers and Property Names		Object Type		
		Device	Analog Value (AV)	Binary Value (BV)
#4	ACTIVE_TEXT			V
#11	APDU_TIMEOUT (APDU, Application Protocol Data Unit)	V		

Property Numbers and Property Names		Object Type		
		Device	Analog Value (AV)	Binary Value (BV)
#12	APPLICATION_SOFTWARE_VERSION	V		
#28	DESCRIPTION	V	V	V
#30	DEVICE_ADDRESS_BINDING	V	V	
#36	EVENT_STATE		V	V
#44	FIRMWARE_REVISION	V		
#46	INACTIVE_TEXT			V
#62	MAX_APDU_LENGTH_ACCEPTED	V		
#63	MAX_INFO_FRAMES	V		
#64	MAX_MASTER	V		
#70	ODEL_NAME	V		
#73	NUMBER_OF_APDU_RETRIES	V		
#75	OBJECT_IDENTIFIER	V *1	V	V
#76	OBJECT_LIST	V		
#77	OBJECT_NAME	V *1	V	V
#79	OBJECT_TYPE	V	V	V
#81	OUT_OF_SERVICE		V	V
#85	PRESENT_VALUE		V *2	V *2
#87	PRIORITY_ARRAY		V *3	V *3
#96	PROTOCOL_OBJECT_TYPES_SUPPORTED	V		
#97	PROTOCOL_SERVICES_SUPPORTED	V		
#98	PROTOCOL_VERSION	V		
#104	RELINQUISH_DEFAULT		V *3	V *3
#107	SEGMENTATION_SUPPORTED	V		
#111	STATUS_FLAGS		V	V
#112	SYSTEM_STATUS	V		
#117	UNITS		V	
#120	VENDOR_IDENTIFIER	V		
#121	VENDOR_NAME	V		
#139	PROTOCOL_REVISION	V		
#155	DATABASE_REVISION	V		

NOTE:

*1. Both the property of the object identity code (Object_ID) and the property of the object name (Object_Name) of the Device are writeable.

*2. The present values (Present_Value) of some AV and BV are commandable.

*3. If the object is commandable, it also supports Priority_Array and Relinguish_Default properties.

16-1-5-1 AV objects, they can be divided into *commandable objects* and *read-only objects*

- Commandable AV objects: we can use write service to change the present values of commandable objects. Therefore, commandable AV objects are often linked to the control characters and parameters of MP300.
  In MP300, the present values of the object number AV_000–AV_001 are commandable. Moreover, the object number AV_000–AV_001 also support Priority_Array and Relinguish_Default properties. Therefore, we can use read service to get data.

Object Number	R/W	Object Name	Description	Unit
AV 000	RW	AV 000	Frequency command	UNITS_HERTZ
AV 001	RW	AV 001	AO Value	UNITS_PERCENT

- Read-only AV objects: we can only use read service to get data from the present value of the read-only objects. Therefore, read-only AV objects are often linked to the status characters of MP300.
  In MP300, the present values of the object number AV_050–AV_075 are read-only. Therefore, the object number AV_050–AV_075 don't support Priority_Array and Relinguish_Default properties.

Object Number	R/W	Object Name	Description	Unit
AV 050	R	AV 050	Output Frequency	UNITS_HERTZ
AV 051	R	AV 051	Output Torque	UNITS_PERCENT
AV 052	R	AV 052	Warn Code	UNITS_NO_UNITS
AV 053	R	AV 053	Error Code	UNITS_NO_UNITS
AV 054	R	AV 054	Output Current	UNITS_AMPERES
AV 055	R	AV 055	Dc Bus Voltage	UNITS_VOLTS
AV 056	R	AV 056	Output Voltage	UNITS_VOLTS
AV 057	R	AV 057	Output Power Angle P.F.	UNITS_DEGREES_ANGULAR
AV 058	R	AV 058	Output Power	UNITS_KILOWATTS
AV 059	R	AV 059	IGBT Temperature	UNITS_DEGREES_CELSIUS
AV 060	R	AV 060	Capacitance Temperature	UNITS_DEGREES_CELSIUS
AV 061	R	AV 061	Real Carrier Frequency	UNITS_KILOHERTZ
AV 062	R	AV 062	OL Level	UNITS_PERCENT
AV 063	R	AV 063	GFF Detect Level	UNITS_PERCENT
AV 064	R	AV 064	Dc Bus Voltage Ripples	UNITS_VOLTS
AV 065	R	AV 065	Fan Speed	UNITS_PERCENT
AV 066	R	AV 066	Output Speed(rpm)	UNITS_REVOLUTIONS_PER_MINUTE
AV 067	R	AV 067	Kw Per Hour	UNITS_KILOWATT_HOURS
AV 068	R	AV 068	Real Multi-Speed Switch	UNITS_NO_UNITS
AV 069	R	AV 069	Digital Input Status	UNITS_NO_UNITS
AV 070	R	AV 070	Digital Output Status	UNITS_NO_UNITS
AV 071	R	AV 071	Cpu Pin Status of Digital Input	UNITS_NO_UNITS
AV 072	R	AV 072	Cpu Pin Status of Digital Output	UNITS_NO_UNITS

Object Number	R/W	Object Name	Description	Unit
AV 073	R	AV 073	PLC D1043 Value	UNITS_NO_UNITS
AV 074	R	AV 074	PID Reference	UNITS_NO_UNITS
AV 075	R	AV 075	PID Feedback	UNITS_NO_UNITS

16-1-5-2 BV objects, they can be divided into *commandable objects* and *read-only objects*

- Commandable BV objects: we can use write service to change the present values of commandable objects. Therefore, commandable BV objects are often linked to the control characters of MP300.
  In MP300, the present values of the object number BV_000–BV_002 are commandable. Moreover, the object number BV_000–BV_002 also support Priority_Array and Relinguish_Default properties. Therefore, we can use read service to get data.

Object Number	R/W	Object Name	Description
BV 000	RW	BV 000	Run/Stop Cmd (0): FreqCmd=0 (1): FreqCmd=FreqRefValue
BV 001	RW	BV 001	Fwd/Rev Cmd (0): Forward (1): Reverse
BV 002	RW	BV 002	Reset Cmd (0): Do nothing (1): Reset Fault

- Read-only BV objects: we can only use read service to get data from the present value of the read-only objects. Therefore, read-only BV objects are often linked to the status characters of MP300.
  In MP300, the present values of the object number BV_050–BV_053 are read-only. Therefore, the object number BV_050–BV_053 don’t support Priority_Array and Relinguish_Default properties.

Object Number	R/W	Object Name	Description
BV 050	R	BV 050	Run/Stop State (0): VFD Stop (1): VFD Running
BV 051	R	BV 051	Fwd/Rev State (0): Forward (1): Reverse
BV 052	R	BV 052	Warn State (0): No Warn (1): Occur Warn
BV 053	R	BV 053	Error State (0): No Error (1): Occur Error

Appendix A. Modbus Protocol

A-1 Code Description

A-2 Data Format

A-3 Communication Protocol

A-4 Address List

A-5 Exception Response

- 🕮 When using the communication interface, it is recommended to use Delta IFD6530 or IFD6500 as the communication converter, and connect terminals SG+ and SG- for connecting the AC motor drive to the PC.
- 🕮 Modbus ASCII (American Standard Code for Information Interchange): Each byte of data is the combination of two ASCII characters. For example, one byte of data: 64 Hex, shown as ‘64’ in ASCII, consists of ‘6’ (36Hex) and ‘4’ (34Hex).

A-1 Code Description

The communication protocol is in hexadecimal, ASCII: “0” … “9”, “A” … “F”, every hexadecimal value represents an ASCII code. The following table shows some examples. Example:

Character	‘0’	‘1’	‘2’	‘3’	‘4’	‘5’	‘6’	‘7’
ASCII code	30H	31H	32H	33H	34H	35H	36H	37H

Character	‘8’	‘9’	‘A’	‘B’	‘C’	‘D’	‘E’	‘F’
ASCII code	38H	39H	41H	42H	43H	44H	45H	46H

A-2 Data Format

1. 10-bit character frame (For ASCII):

(Format: 7, N, 2)

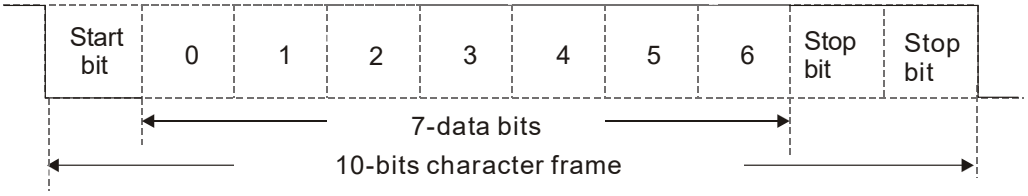

(Format: 7, E, 1)

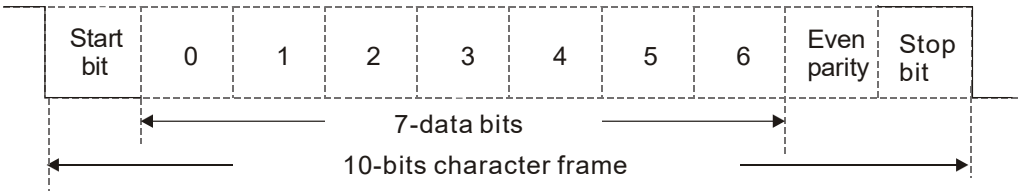

(Format: 7, O, 1)

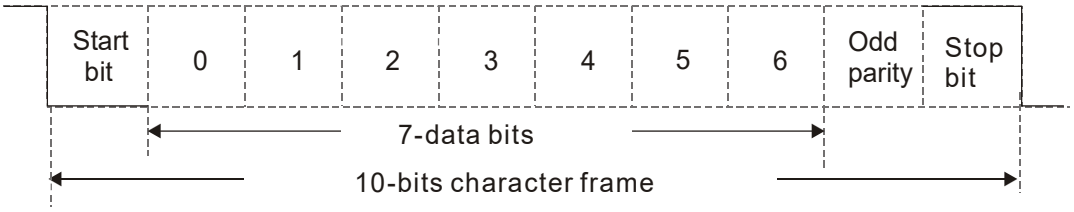

2. 11-bit character frame (For RTU):

(Format: 8, N, 2)

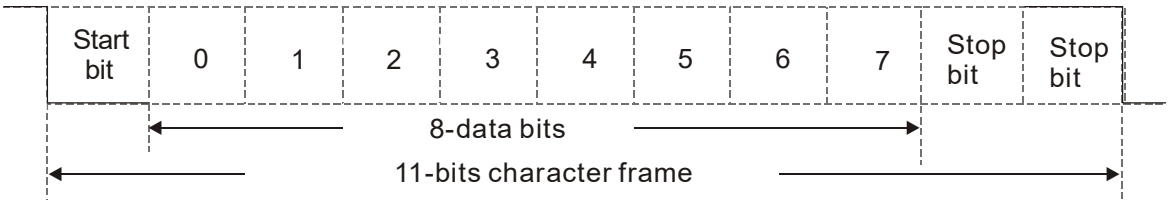

(Format: 8, E, 1)

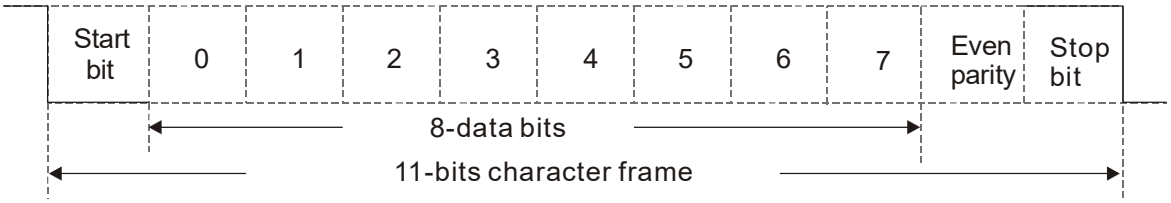

(Format: 8, O, 1)

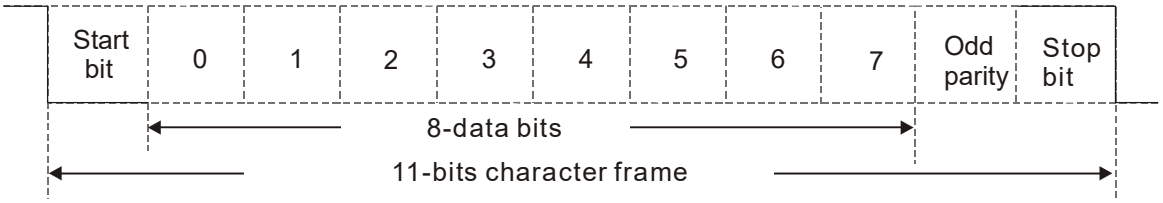

A-3 Communication Protocol

1. Communication Data Frame

ASCII mode:

STX	Start character = ‘ : ’ (3AH)
Address Hi	Communication address:
Address Lo	one 8-bit address consists of 2 ASCII codes
Function Hi	Command code:
Function Lo	one 8-bit command consists of 2 ASCII codes
DATA (n-1)	Contents of data:
…….	n x 8-bit data consists of 2n ASCII codes
DATA 0	n ≤ 16, maximum of 32 ASCII codes (20 sets of data)
LRC CHK Hi	LRC checksum:
LRC CHK Lo	one 8-bit checksum consists of 2 ASCII codes
END Hi	End characters:
END Lo	END Hi = CR (0DH), END Lo = LF (0AH)

RTU mode:

START	Defined by a silent interval of more than 10 ms
Address	Communication address: 8-bit binary address
Function	Command code: 8-bit binary command
DATA (n-1)	Contents of data:
…….	N × 8-bit data, n ≤16
DATA 0	
LRC Check Low	CRC checksum:
LRC Check High	one 16-bit CRC checksum consists of 2 8-bit binary characters
END	Defined by a silent interval of more than 10 ms

2. Communication Address (Address)

00H: Broadcast to all AC motor drives

01H: AC motor drive at address 01

0FH: AC motor drive at address 15

10H: AC motor drive at address 16, and so on... FEH: AC motor drive of address 254

3. Function (Function code) and DATA (Data characters)

(1) 03H: Read data from register

06H: Write a single data to register

Example: Reading two continuous data from register address 2102H. AMD address is 01H.

ASCII mode:

Command Message

STX	‘ : ’
Address	‘0’
	‘1’
Function	‘0’
	‘3’
Starting register	‘2’
	‘1’
	‘0’
	‘2’
Number of register (count by word)	‘0’
	‘0’
	‘0’
	‘2’
LRC Check	‘D’
	‘7’
END	CR
	LF

Response Message

STX	‘ : ’
Address	‘0’
	‘1’
Function	‘0’
	‘3’
Number of register (count by byte)	‘0’
	‘4’
Content of starting register 2102H	‘1’
	‘7’
	‘7’
	‘0’
Content of register 2103H	‘0’
	‘0’
	‘0’
	‘0’
LRC Check	‘7’
	‘1’
END	CR
	LF

RTU mode:

Command Message

Address	01H
Function	03H
Starting data register	21H
	02H
Number of register (count by world)	00H
	02H
LRC Check Low	6FH
LRC Check High	F7H

Response Message

Address	01H
Function	03H
Number of register (count by byte)	04H
Content of register address 2102H	17H
	70H
Content of register address 2103H	00H
	00H
LRC Check Low	FEH
LRC Check High	5CH

(2) 06H: Write a single data to register

Example: Writing data 6000 (1770H) to register 0100H. AMD address is 01H.

ASCII mode:

Command Message		Response Message	
STX	':'	STX	':'
Address	'0'	Address	'0'
	'1'		'1'
Function	'0'	Function	'0'
	'6'		'6'
Target register	'0'	Target register	'0'
	'1'		'1'
	'0'		'0'
	'0'		'0'
Register content	'1'	Register content	'1'
	'7'		'7'
	'7'		'7'
	'0'		'0'
LRC Check	'7'	LRC Check	'7'
	'1'		'1'
END	CR	END	CR
	LF		LF

RTU mode:

Command Message		Response Message	
Address	01H	Address	01H
Function	06H	Function	06H
Target register	01H	Target register	01H
	00H		00H
Register content	17H	Register content	17H
	70H		70H
LRC Check Low	86H	LRC Check Low	86H
LRC Check High	22H	LRC Check High	22H

(3) 10H: write multiple registers (write multiple data to registers). The system can write up to 20 sets of data simultaneously.

Example: Set the multi-step speed of an AC motor drive (address is 01H): Pr.04-00 = 50.00 (1388H), Pr.04-01 = 40.00 (0FA0H)

ASCII mode:

Command Message		Response Message	
STX	':'	STX	':'
ADR 1	'0'	ADR 1	'0'
ADR 0	'1'	ADR 0	'1'
CMD 1	'1'	CMD 1	'1'
CMD 0	'0'	CMD 0	'0'

Target register	‘0’
	‘5’
	‘0’
	‘0’
Number of register (count by word)	‘0’
	‘0’
	‘0’
	‘2’
Number of register (count by Byte)	‘0’
	‘4’
The first data content	‘1’
	‘3’
	‘8’
	‘8’
The second data content	‘0’
	‘F’
	‘A’
	‘0’
LRC Check	‘9’
	‘A’
END	CR
	LF

Target register	‘0’
	‘5’
	‘0’
	‘0’
Number of register (count by word)	‘0’
	‘0’
	‘0’
	‘2’
LRC Check	‘E’
	‘8’
END	CR
	LF

RTU mode:

Command Message

ADR	01H
CMD	10H
Target register	05H
	00H
Number of register (Count by word)	00H
	02H
Quantity of data (bytes)	04
The first data content	13H
	88H
The second data content	0FH
	A0H
CRC Check Low	40H
CRC Check High	49H

Response Message

ADR	01H
CMD 1	10H
Target register	05H
	00H
Number of register (Count by word)	00H
	02H
CRC Check Low	41H
CRC Check High	04H

4. Checksum

(1) ASCII mode (LRC Check):

The check code (LRC Check) is the value added from Address to the end of Data Content, and then takes the complement of 2 + 1. For example: the check code of the request message listed in 3. (1) on page 4: 01H + 03H + 21H + 02H + 00H +02H = 29H, taking the complement of 2 + 1 = D7H.

(2) RTU mode (CRC Check):

CRC (Cyclical Redundancy Check) starts from Address and ends at Data Content. It is calculated by the following steps:

Step 1: Load a 16-bit register (called CRC register) with FFFFH.

Step 2: Exclusive OR the first 8-bit byte of the command message with the low order byte of the 16-bit CRC register, and put the result in the CRC register.

Step 3: Examine the LSB of CRC register.

Step 4: If the LSB of CRC register is 0, shift the CRC register one bit to the right, fill MSB with zero, then repeat step 3. If the LSB of CRC register is 1, shift the CRC register one bit to the right, fill MSB with zero, Exclusive OR the CRC register with the polynomial value A001H, then repeat step 3.

Step 5: Repeat step 3 and 4 until you perform eight shifts. This processes a complete 8-bit byte.

Step 6: Repeat step 2 through 5 for the next 8-bit byte of the command message. Continue doing this until all bytes are processed. The final contents of the CRC register are the CRC value. When transmitting the CRC value in the message, the upper and lower bytes of the CRC value must be swapped, that is, the lower order byte is transmitted first.

5. The following is an example of CRC generation using C language. The function takes two arguments:

Unsigned char* data ← a pointer to the message buffer

Unsigned char length ← the quantity of bytes in the message buffer

The function returns the CRC value as a type of unsigned integer. Unsigned int crc_chk(unsigned char* data, unsigned char length)

```
{
        int j;
        unsigned int reg_crc=0Xffff;
        while(length--){
                reg_crc ^= *data++;
                for(j=0;j<8;j++){
                        if(reg_crc & 0x01){   /* LSB(b0)=1 */
                                reg_crc=(reg_crc>>1) ^ 0Xa001;
                        }else{
                                reg_crc=reg_crc >>1;
                        }
                }
        }
        return reg_crc;                         // return register CRC
}
```

A-4 Address list

1. ASCII
   (1) Reads one or more parameter values: 3Ah (start bit‘ **:** ’) + 30h 31h (station address 01) + 30h 33h (function code 03h) + 30h 30h xxh xxh–32h 36h xxh xxh (Modbus address 00xxh–26xxh) + xxh xxh xxh xxh (reading length 1) + LRC (checksum) + CR/LF
   (2) Writes one parameter value: 3Ah (start bit‘ **:** ’) + 30h 31h (station address 01) + 30h 36h (function code 06h) + 30h 30h xxh xxh–32h 36h xxh xxh(Modbus address 00xxh–26xxh) + xxh xxh xxh xxh (writing value) + LRC (checksum) + CR/LF
   (3) Writes 20 parameter values: 3Ah (start bit‘ **:** ’) + 30h 31h (station address 01) + 31h 30h (function code 10h) + 30h 30h xxh xxh–32h 36h xxh xxh (Modbus address 00xxh–26xxh) + 30h 30h 31h 34h (word data length) + 30h 30h 32h 38h(byte data length) + xxh xxh xxh xxh (the first writing value) + ... + xxh xxh xxh xxh (the 20th writing value) + LRC (checksum) + CR/LF
2. RTU
   (1) Reads one or more parameter values: 01h (station address 01) + 03h (function code 03h) + 00xxh–26xxh (Modbus address) + xxxxh (reading length) + CRC (checksum)
   (2) Writes one parameter value: 01h (station address 01) + 06h (function code 06h) + 00xxh–26xxh (Modbus address) + xxxxh (writing value) + CRC (checksum)
   (3) Writes 20 parameter values: 01h (station address 01) + 10h (function code 10h) + 00xxh–26xxh (Modbus address) + 0014h (data length, count by word) + 0028h (data length, count by byte) + xxxxh (the first writing value) + ... + xxxxh (the 20th writing value) + CRC (checksum)

3. AC motor drive parameters (GGxx): communication station address is Pr.09-00 setting value

Modbus Address	Attribute (Function Code)	Description
GGnnH	R(03H) / W (06H, 10H)	GG means parameter group, nn means parameter number. For example, the Modbus address of Pr.04-10 is 040AH when reading by Delta VFDsoft.

4. Control command (20xx): communication station address is Pr.09-00 setting value

Function Name	Modbus Address	Attribute (Function Code)	Size	Description		
Operation command	2000H	R (03H) / W (06H, 10H)	U16	bit1–0	00B: No function	1. Remains the status specified by a first command until a second command is received. 2. Valid only when operation command source is set to communication (Pr.00-03 = 2).
					01B: Stop	
					10B: Run	
					11B: JOG + Run	
				bit3–2	Reserved	
				bit5–4	00B: No function	
					01B: FWD	
					10B: REV	
					11B: Change direction	
				bit7–6	00B: 1st accel. / decel.	1. Valid only when 2000h bit12 is set to 1. 2. Obtain the current running speed by
					01B: 2nd accel. / decel.	
					10B: 3rd accel. / decel.	
					11B: 4th accel. / decel.	

Function Name	Modbus Address	Attribute (Function Code)	Size	Description		
			U16	bit11–8	0000B: zero step speed	reading 2107h.
					0001B: 1st step speed	
					0010B: 2nd step speed	
					0011B: 3rd step speed	
					0100B: 4th step speed	
					0101B: 5th step speed	
					0110B: 6th step speed	
					0111B: 7th step speed	
					1000B: 8th step speed	
					1001B: 9th step speed	
					1010B: 10th step speed	
					1011B: 11th step speed	
					1100B: 12th step speed	
					1101B: 13th step speed	
					1110B: 14th step speed	
					1111B: 15th step speed	
				bit12	1: Enable bit06–11 function	
Frequency command	2001H	R (03H) / W (06H, 10H)		Frequency command (XXX.XX Hz).		
Fault / control command source	2002H	R (03H) / W (06H, 10H)		bit0	1: External Fault (E.F.) ON	To trigger an external fault to the drive to make it stop running. Drive's stop method can be set through drive parameters.
				bit1	1: Reset	To clear the fault status
				bit2	1: Base block (B.B) ON	To trigger an external base block to the drive to suspend the operation. When bit = 0 and clear BB situation, the drive returns to the previous operation.

5. Status monitor read only (21xx): communication station address is Pr.09-00 setting value

Function Name	Modbus Address	Attribute (Function Code)	Size	Description	
Fault status	2100H	R(03H)	U16	bit7–0: Fault code bit15–8: Warning code	
Drive operation status	2101H	R(03H)		bit1–0	Status of RUN / STOP 00B: Drive fully stops (RUN indicator is OFF / STOP indicator is ON) 01B: Drive is stopping (RUN indicator flashes / STOP indicator is ON) 10B: Drive is in standby status (RUN indicator is ON / STOP indicator flashes) 11B: Drive is running (RUN indicator is ON / STOP indicator is OFF)
				bit2	1: JOG command
				bit4–3	Operation direction 00B: FWD (REV indicator is OFF / FWD indicator is ON) 01B: from REV to FWD (REV indicator flashes / FWD indicator is ON) 10B: from FWD to REV (REV indicator is ON / FWD indicator flashes) 11B: REV (REV indicator is ON / FWD indicator is OFF)
				bit8	1: Master frequency controlled by communication interface
				bit9	1: Master frequency controlled by analog / external terminal signal
				bit10	1: Operation command controlled by communication interface
				bit11	1: Parameter locked
				bit15–13	JOG status indication bit
Frequency command	2102H	R(03H)		Drive’s frequency command (XXX.XX Hz)	
Output frequency	2103H	R(03H)		Drive’s output frequency (XXX.XX Hz)	
Output current	2104H	R(03H)		Drive’s output current (XX.XX A). When the current is higher than 655.35, it will automatically be displayed with one decimal place (XXXX.X A). Decimal places can be referred by the high byte of 211F	
DC bus voltage	2105H	R(03H)		Drive’s DC bus voltage (XXX.X V)	
Output voltage	2106H	R(03H)		Drive’s output voltage (XXX.X V)	

Function Name	Modbus Address	Attribute (Function Code)	Size	Description
Multi-step speed status	2107H	R(03H)		Drive's current running speed step given by multi-step speed command (0 is main speed)
Counter value	2109H	R(03H)	U16	The present value of MI
Output power factor angle	210AH	R(03H)		Drive's output power factor angle (XXX.X°) (0.0–180.0°)
Output torque	210BH	R(03H)		Output torque (XXX.X %)
Motor actual speed	210CH	R(03H)		Actual motor speed (XXXXX rpm)
Power output	210FH	R(03H)		Drive's output power (XXXX.X kW)
Multi-function display	2116H	R(03H)		Display the low word value (Pr.00-04) of user-defined items, the value is low 16 bits data.
Maximum user-defined value	211BH	R(03H)		Maximum Operation Frequency (Pr.01-00) or Maximum User-defined Value (Pr.00-26) ● When Pr.00-26 is 0, this value is equal to Pr.01-00 setting ● When Pr.00-26 is not 0, and the command source is keypad, this value = Pr.00-24 × Pr.00-26 / Pr.01-00 ● When Pr.00-26 is not 0, and the command source is 485, this value = Pr.09-10 × Pr.00-26 / Pr.01-00
Output current digit	211FH	R(03H)		High byte: Current digit (display)

6. Status monitor read only (22xx): communication station address is Pr.09-00 setting value

Function Name	Modbus Address	Attribute (Function Code)	Size	Description
Output current	2200H	R(03H)	U16	Display output current (A). When current is higher than 655.35, it shifts the decimal as (XXX.X A). The decimal can refer to High byte of 211F.
Counter value	2201H	R(03H)		Display counter value
Output frequency	2202H	R(03H)		Actual output frequency (XXXXX Hz)
DC bus voltage	2203H	R(03H)		DC bus voltage (XXX.X V)
Output voltage	2204H	R(03H)		U, V, W, output voltage of the drive (XXX.X V)
Power factor angle	2205H	R(03H)		Power angle of the output from the drive (XXX.X deg)
Power output	2206H	R(03H)		Display actual motor speed kW of U, V, W (XXXX.X kW)
Motor actual speed	2207H	R(03H)		Display motor speed in rpm estimated by the drive or encoder feedback (XXXXX rpm)
Output torque	2208H	R(03H)		Display positive/negative output torque in %, estimated by the drive (t0.0: positive torque, -0.0: negative torque) (XXX.X %)
PID feedback value	220AH	R(03H)		PID feedback value after enabling PID function (XXX.XX %)
AVI analog input	220BH	R(03H)		Display signal of AVI analog input terminal, 0–10 V corresponds to 0.00–100.00% (see NOTE 1 in Pr.00-04)
ACI analog input	220CH	R(03H)		Display signal of ACI analog input terminal, 4–20 mA / 0–10 V corresponds to 0.00–100.00% (see NOTE 2 in Pr.00-04)

Function Name	Modbus Address	Attribute (Function Code)	Size	Description	
AUI analog input	220DH	R(03H)		Display signal of AUI analog input terminal, -10 V–10 V corresponds to -100.00–100% (3.) (see NOTE 1 in Pr.00-04)	
IGBT temperature	220EH	R(03H)		IGBT temperature of drive power module (XXX.XºC)	
Drive capacitance temperature	220FH	R(03H)		The temperature of capacitance (XXX.XºC)	
Digital input status	2210H	R(03H)		The status of digital input (ON/OFF), refer to Pr.02-12. (see NOTE 3 in Pr.00-04)	
Digital output status	2211H	R(03H)		The status of digital output (ON/OFF), refer to Pr.02-18. (see NOTE 4 in Pr.00-04)	
Multi-step speed	2212H	R(03H)		The multi-step speed that is executing	
The co-responding CPU pin status of digital input	2213H	R(03H)		The corresponding CPU pin status of digital input (see NOTE 3 in Pr.00-04)	
The co-responding CPU pin status of digital output	2214H	R(03H)		The corresponding CPU pin status of digital output (see NOTE 4 in Pr.00-04)	
Overload counter	2219H	R(03H)		Display times of counter overload (XXX.XX %)	
GFF	221AH	R(03H)		GFF (XXX.XX%)	
DC bus voltage ripples	221BH	R(03H)		DC bus voltage ripples (XXX.X V)	
PLC register	221CH	R(03H)		PLC register D1043 data (C)	
Display of user-defined output	221EH	R(03H)		User page displays the value in physical measure	
Pr.00-05 gain value	221FH	R(03H)		Output Value of Pr.00-05 (XXX.XX Hz)	
Control mode	2223H	R(03H)		Control mode of the drive 0: Speed mode (SPD)	
Frequency of carrier wave	2224H	R(03H)		Carrier frequency of the drive (XX kHz)	
Drive status	2226H	R(03H)		bit1~0	00b: No direction 01b: Forward 10b: Reverse
				bit3~2	01b: Drive ready 10b: Error
				bit4	0b: Motor drive did not output 1b: Motor drive did output
				bit5	0b: No alarm 1b: Alarm
Positive / negative torque	2227H	R(03H)		Displays the drive's estimated output torque (unit: Nt-m) (t 0.0: positive torque; -0.0: negative torque)	
kWh	2229H	R(03H)		kWh display (XXXX.X)	
PID reference	222EH	R(03H)		PID reference (XXX.XX%)	
PID offset	222FH	R(03H)		PID offset (XXX.XX%)	
PID output frequency	2230H	R(03H)		PID output frequency (XXX.XX Hz)	
Auxiliary frequency	2232H	R(03H)		Display the auxiliary frequency value	
Master frequency	2233H	R(03H)		Display the master frequency value	

Function Name	Modbus Address	Attribute (Function Code)	Size	Description
Frequency value after addition and subtraction of master and auxiliary frequency	2234H	R(03H)	U16	Display the frequency value after addition and subtraction of master and auxiliary frequency
KTY84 or PTC	2235H	R(03H)		Display the motor temperature (support KTY-84-130 only)
Current I_a	223BH	R(03H)		A-phase current
Current I_b	223CH	R(03H)		B-phase current
Current I_c	223DH	R(03H)		C-phase current
Flow rate estimation 1	2260H	R(03H)		Flow rate estimation (unit: m³/hr, one decimal place)
Flow rate estimation 2	2261H	R(03H)		Flow rate estimation (unit: m³/hr, two decimal places)
Inlet pressure 1	2270H	R(03H)		Inlet pressure (unit: bar, two decimal places)
Inlet pressure 2	2271H	R(03H)		Inlet pressure (unit: bar, the decimal place determined by Pr.00-38)
Outlet pressure 1	2262H	R(03H)		Outlet pressure (unit: bar, two decimal places)
Outlet pressure 2	2272H	R(03H)		Outlet pressure (unit: bar, the decimal place determined by Pr.00-26)
Cavitation status	2273H	R(03H)		0: The estimation does not start. 1: Execute cavitation detection 2: Cavitation occurs

7. Remote IO (26xx): communication station address is Pr.09-00 setting value

Function Name	Modbus Address	Attribute (Function Code)	Size	Description
Digital input terminal MI16–MI1 status	2600H	R(03H)	U16	Each bit corresponds to a different terminal input contact
Digital output terminal MI16–MI1 status	2640H	R(03H) / W(06H, 10H)		Each bit corresponds to a different terminal output contact
AVI proportional value	2660H	R(03H)		AI1 proportional value
ACI proportional value	2661H	R(03H)		AI2 proportional value
VFD analog output 0 (AFM1) value	2680H	R(03H)		The percentage of the output from AFMA of the current drive (%)

A-5 Exception response

When the drive is using the communication connection, if an error occurs, the drive responds to the error code and sets the highest bit (bit 7) of the command code to 1 (function code AND 80H) then responds to the control system to signal that an error occurred. If the keypad displays “CE-XX” as a warning message, “XX” is the error code at that time. Refer to the table of error codes for communication error for reference.

Example:

ASCII mode:

STX	‘:’
Address	‘0’
	‘1’
Function	‘8’
	‘6’
Exception code	‘0’
	‘2’
LRC Check	‘7’
	‘7’
END	CR
	LF

RTU mode:

Address	01H
Function	86H
Exception code	02H
LRC Check Low	C3H
LRC Check High	A1H

The explanation of error codes

Fault codes	Descriptions
1	Function code is not supported or unrecognized
2	Address is not supported or unrecognized.
3	Data is not correct or unrecognized.
4	Failure to execute this function code

Appendix B. Revision History

Changes	
Description	Affected Chapter / Section
Revised the multi-pump wiring related information	Section 4-4, 4-5
Added a function for parameter reset	Setting value = 14 of Pr.00-02
Revised the information for maximum user-defined value 1	Pr.00-26
Added a function for analog input curve selection	Setting value = 3 of Pr.03-50
Updated the information for PID control flag	Pr.08-23
Added a parameter for pump switching stop frequency	Pr.12-10
Added reducing pump function related information	Section 12-2; section 15-11

Smarter. Greener. Together.

Industrial Automation Headquarters

Delta Electronics, Inc.
Taoyuan Technology Center
No.18, Xinglong Rd., Taoyuan District,
Taoyuan City 330477, Taiwan
TEL: +886-3-362-6301 / FAX: +886-3-371-6301

Asia

Delta Electronics (Shanghai) Co., Ltd.
No.182 Minyu Rd., Pudong Shanghai, P.R.C.
Post code : 201209
TEL: +86-21-6872-3988 / FAX: +86-21-6872-3996
Customer Service: 400-820-9595

Delta Electronics (Japan), Inc.
Industrial Automation Sales Department
4-11-25, Shibaura, Minato-ku, Tokyo 108-0023, Japan
TEL: +81-3-6811-5470 / FAX: +81-3-6811-5802

Delta Electronics (Korea), Inc.
1511, 219, Gasan Digital 1-Ro., Geumcheon-gu,
Seoul, 08501 South Korea
TEL: +82-2-515-5305 / FAX: +82-2-515-5302

Delta Energy Systems (Singapore) Pte Ltd.
4 Kaki Bukit Avenue 1, #05-04, Singapore 417939
TEL: +65-6747-5155 / FAX: +65-6744-9228

Delta Electronics (India) Pvt. Ltd.
Plot No.43, Sector 35, HSIIDC Gurgaon,
PIN 122001, Haryana, India
TEL: +91-124-4874900 / FAX: +91-124-4874945

Delta Electronics (Thailand) PCL.
909 Soi 9, Moo 4, Bangpoo Industrial Estate (E.P.Z),
Pattana 1 Rd., T.Phraksa, A.Muang,
Samutprakarn 10280, Thailand
TEL: +66-2709-2800 / FAX: +66-2709-2827

Delta Electronics (Australia) Pty Ltd.
Unit 2, Building A, 18-24 Ricketts Road,
Mount Waverley, Victoria 3149 Australia
Mail: IA.au@deltaww.com
TEL: +61-1300-335-823 / +61-3-9543-3720

Americas

Delta Electronics (Americas) Ltd.
5101 Davis Drive, Research Triangle Park, NC 27709, U.S.A.
TEL: +1-919-767-3813

Delta Electronics Brazil Ltd.
Estrada Velha Rio-São Paulo, 5300 Eugênio de
Melo - São José dos Campos CEP: 12247-004 - SP - Brazil
TEL: +55-12-3932-2300 / FAX: +55-12-3932-237

Delta Electronics International Mexico S.A. de C.V.
Gustavo Baz No. 309 Edificio E PB 103
Colonia La Loma, CP 54060
Tlalnepantla, Estado de México
TEL: +52-55-3603-9200

EMEA

Delta Electronics (Netherlands) B.V.
Sales: Sales.IA.EMEA@deltaww.com
Marketing: Marketing.IA.EMEA@deltaww.com
Technical Support: iatechnicalsupport@deltaww.com
Customer Support: Customer-Support@deltaww.com
Service: Service.IA.emea@deltaww.com
TEL: +31(0)40 800 3900

Delta Electronics (Netherlands) B.V.
Automotive Campus 260, 5708 JZ Helmond, The Netherlands
Mail: Sales.IA.Benelux@deltaww.com
TEL: +31(0)40 800 3900

Delta Electronics (Netherlands) B.V.
Coesterweg 45, D-59494 Soest, Germany
Mail: Sales.IA.DACH@deltaww.com
TEL: +49 2921 987 238

Delta Electronics (France) S.A.
ZI du bois Challand 2, 15 rue des Pyrénées,
Lisses, 91090 Evry Cedex, France
Mail: Sales.IA.FR@deltaww.com
TEL: +33(0)1 69 77 82 60

Delta Electronics Solutions (Spain) S.L.U
Ctra. De Villaverde a Vallecas, 265 1º Dcha Ed.
Hormigueras – P.I. de Vallecas 28031 Madrid
TEL: +34(0)91 223 74 20

Carrer Llacuna 166, 08018 Barcelona, Spain
Mail: Sales.IA.Iberia@deltaww.com

Delta Electronics (Italy) S.r.l.
Via Meda 2–22060 Novedrate(CO)
Piazza Grazioli 18 00186 Roma Italy
Mail: Sales.IA.Italy@deltaww.com
TEL: +39 039 8900365

Delta Greentech Elektronik San. Ltd. Sti. (Turkey)
Şerifali Mah. Hendem Cad. Kule Sok. No:16-A
34775 Ümraniye – İstanbul
Mail: Sales.IA.Turkey@deltaww.com
TEL: + 90 216 499 9910

Eltek Dubai (Eltek MEA DMCC)
OFFICE 2504, 25th Floor, Saba Tower 1,
Jumeirah Lakes Towers, Dubai, UAE
Mail: Sales.IA.MEA@deltaww.com
TEL: +971(0)4 2690148

*We reserve the right to change the information in this manual without prior notice.

DELTA_IA-MDS_MPD_UM_EN_20260326